Hill International North Africa Ltd.
Plot 140, NCFC Building,
Banks Zone, 1st District,
Fifth Settlement, New Cairo,
Cairo, Egypt
Tel: +202 2322 0000
Fax: +202 2322 0022
www.hillintl.com

Date: October 30, 2023
Ref: PEG-1155-93M-CN-HI-BOA-LET-ES-8583
Jean Marc Decloquement
Consortium Director
Blocks 277-278,2nd business sector,
Teseen st, Shaker Consultancy Building
New Cairo, Egypt.

Project: Engineering, Procurement and Construction of the New Administrative Capital Monorail and 6th October City Monorail (Contract 93/Metro).

Subject: Comments on shop drawings. // 93M-BOA-NAT-LOT-21635

References:

1. Hill's Letter ref. PEG-1155-93M-CN-HI-BOA-LET-JB-0164
2. Hill's Letter no- PEG-1155-93M-CN-HI-BOA-LET-JB-0205
3. Contractor's Transmittal ref. 93M-BOA-NAT-LOT-21635

Dear Sir,

We note that the below shop drawings (in the Annexure) were uploaded on Aconex with status "closed". We note that there are some comments within the drawings needed to be addressed before commencing the site work.

The comments on the shop drawings as per attached annexure.

The Contractor is advised to correct the above into the shop drawings before any issuance to his site staff.

The Contractor is hereby further notified that in any such eventuality of rework, dismantling of constructed structure on account of such omission on the part of Contractor, it will be to Contractor's account and we re-iterate that any deviations from the approved drawings will triggers withholding from the upcoming payments pursuant to Sub-Clause 14.6 (b) of Conditions of Contract.

For and on behalf of
Hill International (Africa) Ltd

Matt Oakley
Project Director

Attachments:

1. Comments table.
2. Stamped Drawings listed in the attached "Comments table".

Initial /reviewed by: ES
Reply Required: (X) Yes ( ) No
Cc: NAT

DELIVERING THE INFRASTRUCTURE OF CHANGE

93M-BOA-NAT-LOT-21635

S.No.	Drawing no	Comments
1.	93M-0476-ACC-60DEP-DWG-16001-B	1- It is the contractor responsibility to ensure and revise all Dimensions and levels with the approved design drawings besides the coordination package before commencing any site Works. 2- The embedded length of anchors must be matched with the approved design drawings. 3- Follow all weld details (size , length & symbol) as design drawings. 4-The Contractor shall add clouds which show changes between this version and the previous one. 5-Bracing should be added as shown in design reference. 6-For the added reference documents: -Reference "93M-BOA-NAT-LOT-04833" has a higher revision which is "93M-BOA-NAT-LOT-17034". -Reference "93M-BOA-NAT-LOT-01976" has some drawings which have a "not approved" status and it's drs replies which is coded as 2 "approved as noted" are found in reference "93M-BOA-NAT-LOT-07873" which should be added. so please update the reference documents accordingly. 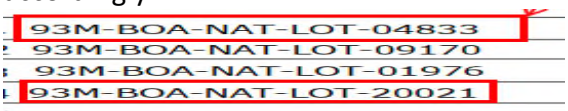
2.	93M-0476-ACC-60DEP-DWG-16002-B	Approval is subject to approval of coordination package between multi-discipline.
3.	93M-0476-ACC-60DEP-DWG-16003-B	Approval is subject to approval of coordination package between multi-discipline.
4.	93M-0476-ACC-60DEP-DWG-16004-B	Approval is subject to approval of coordination package between multi-discipline.
5.	93M-0476-ACC-60DEP-DWG-16005-B	Approval is subject to approval of coordination package between multi-discipline.
6.	93M-0476-ACC-60DEP-DWG-16006-B	1-Add level mark to the top of railing. 2Connection is not matching with the design drawings as shown below.

		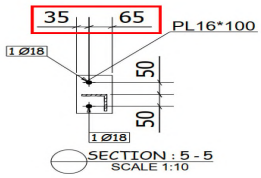 3- This bracing system is not matching with the design references another angle should be added. 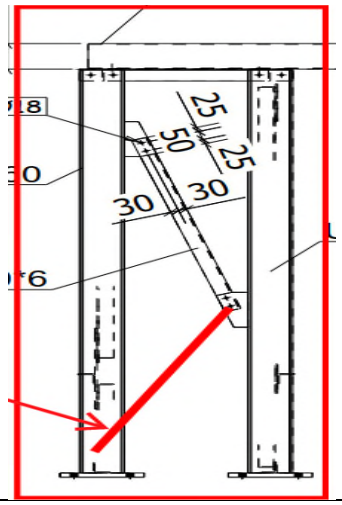
7.	93M-0476-ACC-60DEP-DWG-16007-B	Approval is subject to approval of coordination package between multi-discipline.
8.	93M-0476-ACC-60DEP-DWG-16008-B	1-These distances are not matching with design drawings as shown below. 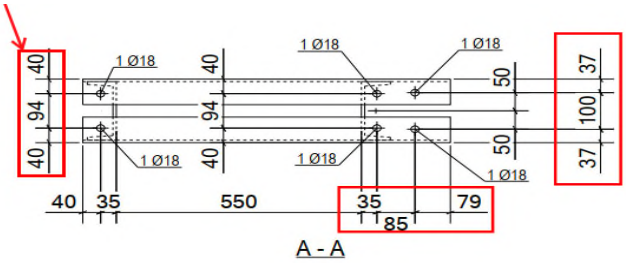 A - A 2-Should be 103mm as shown in design drawings. 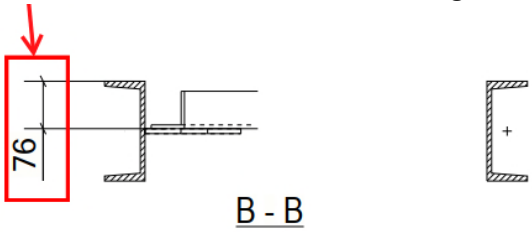 B - B
9.	93M-0476-ACC-60DEP-DWG-16009-B	Same comments as 93M-0476-ACC-60DEP-DWG-16008-B.

10.	93M-0476-ACC-60DEP-DWG-16010-B	Approval is subject to approval of coordination package between multi-discipline.
11.	93M-0476-ACC-60DEP-DWG-16011-B	Same comments as 93M-0476-ACC-60DEP-DWG-16008-B.
12.	93M-0476-ACC-60DEP-DWG-16012-B	Same comments as 93M-0476-ACC-60DEP-DWG-16008-B.
13.	93M-0476-ACC-60DEP-DWG-16013-B	1-Connectaion is not matching with the design drawings as shown below. 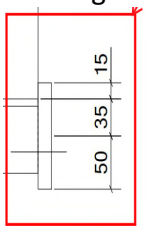 2-Connection is not matching with the design drawings as shown below. 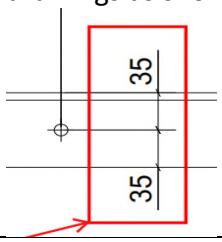
14.	93M-0476-ACC-60DEP-DWG-16014-B	Approval is subject to approval of coordination package between multi-discipline.
15.	93M-0476-ACC-60DEP-DWG-16015-B	Approval is subject to approval of coordination package between multi-discipline.
16.	93M-0476-ACC-60DEP-DWG-16016-B	Same comments as 93M-0476-ACC-60DEP-DWG-16008-B.
17.	93M-0476-ACC-60DEP-DWG-16017-B	Same comments as 93M-0476-ACC-60DEP-DWG-16008-B.
18.	93M-0476-ACC-60DEP-DWG-16018-B	Approval is subject to approval of coordination package between multi-discipline.
19.	93M-0476-ACC-60DEP-DWG-16019-B	Same comments as 93M-0476-ACC-60DEP-DWG-16008-B.
20.	93M-0476-ACC-60DEP-DWG-16020-B	Same comments as 93M-0476-ACC-60DEP-DWG-16013-B.
21.	93M-0476-ACC-60DEP-DWG-16021-B	Same comments as 93M-0476-ACC-60DEP-DWG-16008-B.
22.	93M-0476-ACC-60DEP-DWG-16022-B	Approval is subject to approval of coordination package between multi-discipline.
23.	93M-0476-ACC-60DEP-DWG-16023-B	Same comments as 93M-0476-ACC-60DEP-DWG-16008-B.

24.	93M-0476-ACC-60DEP-DWG-16024-B	Same comments as 93M-0476-ACC-60DEP-DWG-16008-B.
25.	93M-0476-ACC-60DEP-DWG-16025-B	Approval is subject to approval of coordination package between multi-discipline.
26.	93M-0476-ACC-60DEP-DWG-16026-B	Same comments as 93M-0476-ACC-60DEP-DWG-16008-B.
27.	93M-0476-ACC-60DEP-DWG-16027-B	Same comments as 93M-0476-ACC-60DEP-DWG-16008-B.
28.	93M-0476-ACC-60DEP-DWG-16028-B	Same comments as 93M-0476-ACC-60DEP-DWG-16008-B.
29.	93M-0476-ACC-60DEP-DWG-16029-B	Same comments as 93M-0476-ACC-60DEP-DWG-16008-B.
30.	93M-0476-ACC-60DEP-DWG-16030-B	Same comments as 93M-0476-ACC-60DEP-DWG-16008-B.
31.	93M-0476-ACC-60DEP-DWG-16031-B	Same comments as 93M-0476-ACC-60DEP-DWG-16008-B.
32.	93M-0476-ACC-60DEP-DWG-16032-B	1- Same comments as 93M-0476-ACC-60DEP-DWG-16008-B. 2-Distance of fixing the plate is not matching with design drawings as shown below. 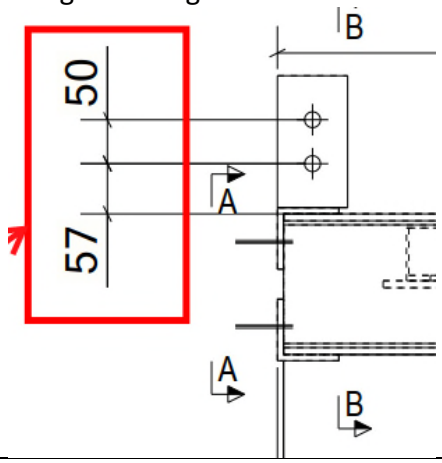
33.	93M-0476-ACC-60DEP-DWG-16033-B	Same comments as 93M-0476-ACC-60DEP-DWG-16032-B.
34.	93M-0476-ACC-60DEP-DWG-16034-B	Same comments as 93M-0476-ACC-60DEP-DWG-16013-B.
35.	93M-0476-ACC-60DEP-DWG-16035-B	Same comments as 93M-0476-ACC-60DEP-DWG-16032-B.
36.	93M-0476-ACC-60DEP-DWG-16036-B	Approval is subject to approval of coordination package between multi-discipline.
37.	93M-0476-ACC-60DEP-DWG-16037-B	Approval is subject to approval of coordination package between multi-discipline.

38.	93M-0476-ACC-60DEP-DWG-16038-B	This assembly is not found in the GA drawings.
39.	93M-0476-ACC-60DEP-DWG-16039-B	Approval is subject to approval of coordination package between multi-discipline.
40.	93M-0476-ACC-60DEP-DWG-16040-B	Approval is subject to approval of coordination package between multi-discipline.
41.	93M-0476-ACC-60DEP-DWG-16041-B	This assembly is not found in the GA drawings.
42.	93M-0476-ACC-60DEP-DWG-16042-B	Approval is subject to approval of coordination package between multi-discipline.
43.	93M-0476-ACC-60DEP-DWG-16043-B	Connection is not matching with the design drawings, as edge distances should be same for both. 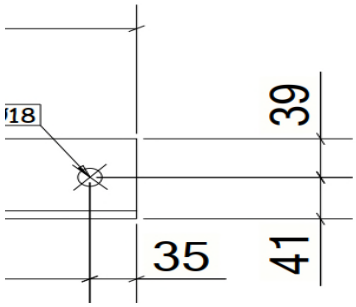
44.	93M-0476-ACC-60DEP-DWG-16044-B	Approval is subject to approval of coordination package between multi-discipline.
45.	93M-0476-ACC-60DEP-DWG-16045-B	Approval is subject to approval of coordination package between multi-discipline.
46.	93M-0476-ACC-60DEP-DWG-16046-B	Approval is subject to approval of coordination package between multi-discipline.
47.	93M-0476-ACC-60DEP-DWG-16047-B	Approval is subject to approval of coordination package between multi-discipline.
48.	93M-0476-ACC-60DEP-DWG-16048-B	Approval is subject to approval of coordination package between multi-discipline.
49.	93M-0476-ACC-60DEP-DWG-16049-B	Approval is subject to approval of coordination package between multi-discipline.
50.	93M-0476-ACC-60DEP-DWG-16050-B	Approval is subject to approval of coordination package between multi-discipline.
51.	93M-0476-ACC-60DEP-DWG-16051-B	Approval is subject to approval of coordination package between multi-discipline.
52.	93M-0476-ACC-60DEP-DWG-16052-B	Approval is subject to approval of coordination package between multi-discipline.
53.	93M-0476-ACC-60DEP-DWG-16053-B	The slot should be short slot a shown in the design reference which is (18*22) according to ANSI/AISC 360-05.
54.	93M-0476-ACC-60DEP-DWG-16054-B	Same comments as 93M-0476-ACC-60DEP-DWG-16053-B.

55.	93M-0476-ACC-60DEP-DWG-16055-B	Same comments as 93M-0476-ACC-60DEP-DWG-16053-B.
56.	93M-0476-ACC-60DEP-DWG-16056-B	Same comments as 93M-0476-ACC-60DEP-DWG-16053-B.
57.	93M-0476-ACC-60DEP-DWG-16057-B	Same comments as 93M-0476-ACC-60DEP-DWG-16053-B.
58.	93M-0476-ACC-60DEP-DWG-16058-B	Same comments as 93M-0476-ACC-60DEP-DWG-16053-B.
59.	93M-0476-ACC-60DEP-DWG-16059-B	Same comments as 93M-0476-ACC-60DEP-DWG-16053-B.
60.	93M-0476-ACC-60DEP-DWG-16060-B	Same comments as 93M-0476-ACC-60DEP-DWG-16053-B.
61.	93M-0476-ACC-60DEP-DWG-16061-B	Same comments as 93M-0476-ACC-60DEP-DWG-16053-B.
62.	93M-0476-ACC-60DEP-DWG-16062-B	Same comments as 93M-0476-ACC-60DEP-DWG-16053-B.
63.	93M-0476-ACC-60DEP-DWG-16063-B	Same comments as 93M-0476-ACC-60DEP-DWG-16053-B.
64.	93M-0476-ACC-60DEP-DWG-16064-B	Same comments as 93M-0476-ACC-60DEP-DWG-16053-B.
65.	93M-0476-ACC-60DEP-DWG-16065-B	Same comments as 93M-0476-ACC-60DEP-DWG-16053-B.
66.	93M-0476-ACC-60DEP-DWG-16066-B	Same comments as 93M-0476-ACC-60DEP-DWG-16053-B.
67.	93M-0476-ACC-60DEP-DWG-16067-B	Approval is subject to approval of coordination package between multi-discipline.
68.	93M-0476-ACC-60DEP-DWG-16068-B	Same comments as 93M-0476-ACC-60DEP-DWG-16053-B.
69.	93M-0476-ACC-60DEP-DWG-16069-B	Approval is subject to approval of coordination package between multi-discipline.
70.	93M-0476-ACC-60DEP-DWG-16070-B	Same comments as 93M-0476-ACC-60DEP-DWG-16053-B.
71.	93M-0476-ACC-60DEP-DWG-16071-B	Same comments as 93M-0476-ACC-60DEP-DWG-16053-B.
72.	93M-0476-ACC-60DEP-DWG-16072-B	Approval is subject to approval of coordination package between multi-discipline.
73.	93M-0476-ACC-60DEP-DWG-16073-B	Same comments as 93M-0476-ACC-60DEP-DWG-16053-B.
74.	93M-0476-ACC-60DEP-DWG-16074-B	Same comments as 93M-0476-ACC-60DEP-DWG-16053-B.
75.	93M-0476-ACC-60DEP-DWG-16075-B	Same comments as 93M-0476-ACC-60DEP-DWG-16053-B.
76.	93M-0476-ACC-60DEP-DWG-16076-B	Same comments as 93M-0476-ACC-60DEP-DWG-16053-B.

77.	93M-0476-ACC-60DEP-DWG-16077-B	Same comments as 93M-0476-ACC-60DEP-DWG-16053-B.
78.	93M-0476-ACC-60DEP-DWG-16078-B	Same comments as 93M-0476-ACC-60DEP-DWG-16053-B.
79.	93M-0476-ACC-60DEP-DWG-16079-B	Same comments as 93M-0476-ACC-60DEP-DWG-16053-B.
80.	93M-0476-ACC-60DEP-DWG-16080-B	Same comments as 93M-0476-ACC-60DEP-DWG-16053-B.
81.	93M-0476-ACC-60DEP-DWG-16081-B	Same comments as 93M-0476-ACC-60DEP-DWG-16053-B.
82.	93M-0476-ACC-60DEP-DWG-16082-B	Approval is subject to approval of coordination package between multi-discipline.
83.	93M-0476-ACC-60DEP-DWG-16083-B	Same comments as 93M-0476-ACC-60DEP-DWG-16053-B.
84.	93M-0476-ACC-60DEP-DWG-16084-B	Same comments as 93M-0476-ACC-60DEP-DWG-16053-B.
85.	93M-0476-ACC-60DEP-DWG-16085-B	Same comments as 93M-0476-ACC-60DEP-DWG-16053-B.
86.	93M-0476-ACC-60DEP-DWG-16086-B	Same comments as 93M-0476-ACC-60DEP-DWG-16053-B.
87.	93M-0476-ACC-60DEP-DWG-16087-B	Same comments as 93M-0476-ACC-60DEP-DWG-16053-B.
88.	93M-0476-ACC-60DEP-DWG-16088-B	Same comments as 93M-0476-ACC-60DEP-DWG-16053-B.
89.	93M-0476-ACC-60DEP-DWG-16089-B	Same comments as 93M-0476-ACC-60DEP-DWG-16053-B.
90.	93M-0476-ACC-60DEP-DWG-16090-B	Same comments as 93M-0476-ACC-60DEP-DWG-16053-B.
91.	93M-0476-ACC-60DEP-DWG-16091-B	Same comments as 93M-0476-ACC-60DEP-DWG-16053-B.
92.	93M-0476-ACC-60DEP-DWG-16092-B	Same comments as 93M-0476-ACC-60DEP-DWG-16053-B.
93.	93M-0476-ACC-60DEP-DWG-16093-B	Same comments as 93M-0476-ACC-60DEP-DWG-16053-B.
94.	93M-0476-ACC-60DEP-DWG-16094-B	Approval is subject to approval of coordination package between multi-discipline.
95.	93M-0476-ACC-60DEP-DWG-16095-B	Approval is subject to approval of coordination package between multi-discipline.
96.	93M-0476-ACC-60DEP-DWG-16096-B	Approval is subject to approval of coordination package between multi-discipline.
97.	93M-0476-ACC-60DEP-DWG-16097-B	Approval is subject to approval of coordination package between multi-discipline.
98.	93M-0476-ACC-60DEP-DWG-16098-B	Approval is subject to approval of coordination package between multi-discipline.

99.	93M-0476-ACC-60DEP-DWG-16099-B	Approval is subject to approval of coordination package between multi-discipline.
100.	93M-0476-ACC-60DEP-DWG-16100-B	Approval is subject to approval of coordination package between multi-discipline.
101.	93M-0476-ACC-60DEP-DWG-16101-B	Approval is subject to approval of coordination package between multi-discipline.
102.	93M-0476-ACC-60DEP-DWG-16102-B	Approval is subject to approval of coordination package between multi-discipline.
103.	93M-0476-ACC-60DEP-DWG-16103-B	Approval is subject to approval of coordination package between multi-discipline.
104.	93M-0476-ACC-60DEP-DWG-16104-B	Approval is subject to approval of coordination package between multi-discipline.
105.	93M-0476-ACC-60DEP-DWG-16105-B	Approval is subject to approval of coordination package between multi-discipline.
106.	93M-0476-ACC-60DEP-DWG-16106-B	Approval is subject to approval of coordination package between multi-discipline.
107.	93M-0476-ACC-60DEP-DWG-16107-B	Approval is subject to approval of coordination package between multi-discipline.
108.	93M-0476-ACC-60DEP-DWG-16108-B	Approval is subject to approval of coordination package between multi-discipline.
109.	93M-0476-ACC-60DEP-DWG-16109-B	Approval is subject to approval of coordination package between multi-discipline.
110.	93M-0476-ACC-60DEP-DWG-16110-B	Approval is subject to approval of coordination package between multi-discipline.
111.	93M-0476-ACC-60DEP-DWG-16111-B	Approval is subject to approval of coordination package between multi-discipline.
112.	93M-0476-ACC-60DEP-DWG-16112-B	Approval is subject to approval of coordination package between multi-discipline.
113.	93M-0476-ACC-60DEP-DWG-16113-B	Approval is subject to approval of coordination package between multi-discipline.
114.	93M-0476-ACC-60DEP-DWG-16114-B	Approval is subject to approval of coordination package between multi-discipline.
115.	93M-0476-ACC-60DEP-DWG-16115-B	Approval is subject to approval of coordination package between multi-discipline.
116.	93M-0476-ACC-60DEP-DWG-16116-B	Approval is subject to approval of coordination package between multi-discipline.
117.	93M-0476-ACC-60DEP-DWG-16117-B	Approval is subject to approval of coordination package between multi-discipline.
118.	93M-0476-ACC-60DEP-DWG-16118-B	Distance should be 100mm TYP.

		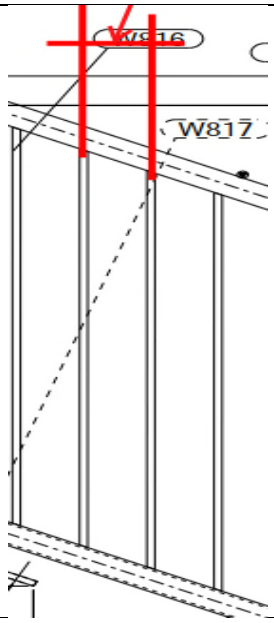
119.	93M-0476-ACC-60DEP-DWG-16119-B	Approval is subject to approval of coordination package between multi-discipline.
120.	93M-0476-ACC-60DEP-DWG-16120-B	Approval is subject to approval of coordination package between multi-discipline.
121.	93M-0476-ACC-60DEP-DWG-16121-B	Approval is subject to approval of coordination package between multi-discipline.
122.	93M-0476-ACC-60DEP-DWG-16122-B	Approval is subject to approval of coordination package between multi-discipline.
123.	93M-0476-ACC-60DEP-DWG-16123-B	Approval is subject to approval of coordination package between multi-discipline.
124.	93M-0476-ACC-60DEP-DWG-16124-B	Approval is subject to approval of coordination package between multi-discipline.
125.	93M-0476-ACC-60DEP-DWG-16125-B	Approval is subject to approval of coordination package between multi-discipline.
126.	93M-0476-ACC-60DEP-DWG-16126-B	Approval is subject to approval of coordination package between multi-discipline.
127.	93M-0476-ACC-60DEP-DWG-16127-B	1-Same comment as 93M-0476-ACC-60DEP-DWG-16118-B. 2-Distances between bolts are not matching with design drawings.

		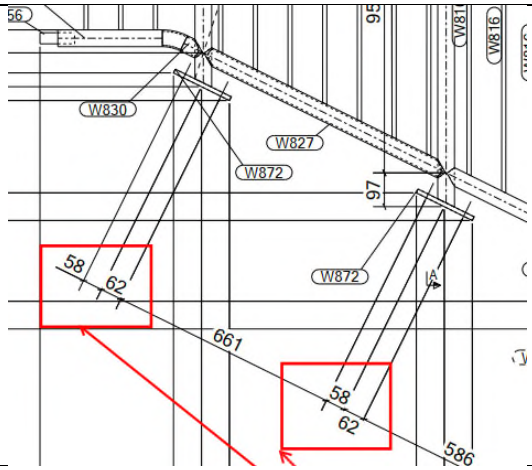
128.	93M-0476-ACC-60DEP-DWG-16128-B	Approval is subject to approval of coordination package between multi-discipline.
129.	93M-0476-ACC-60DEP-DWG-16129-B	Approval is subject to approval of coordination package between multi-discipline.
130.	93M-0476-ACC-60DEP-DWG-16130-B	Approval is subject to approval of coordination package between multi-discipline.
131.	93M-0476-ACC-60DEP-DWG-16131-B	Approval is subject to approval of coordination package between multi-discipline.
132.	93M-0476-ACC-60DEP-DWG-16132-B	Approval is subject to approval of coordination package between multi-discipline.
133.	93M-0476-ACC-60DEP-DWG-16133-B	Approval is subject to approval of coordination package between multi-discipline.
134.	93M-0476-ACC-60DEP-DWG-16134-B	Approval is subject to approval of coordination package between multi-discipline.
135.	93M-0476-ACC-60DEP-DWG-16135-B	Approval is subject to approval of coordination package between multi-discipline.
136.	93M-0476-ACC-60DEP-DWG-16136-B	Approval is subject to approval of coordination package between multi-discipline.
137.	93M-0476-ACC-60DEP-DWG-16137-B	Approval is subject to approval of coordination package between multi-discipline.
138.	93M-0476-ACC-60DEP-DWG-16138-B	Please review the dimensions and level of stair with the site before starting fabrication.
139.	93M-0476-ACC-60DEP-DWG-16139-B	Please review the dimensions and level of stair with the site before starting fabrication.
140.	93M-0476-ACC-60DEP-DWG-16140-B	Approval is subject to approval of coordination package between multi-discipline.
141.	93M-0476-ACC-60DEP-DWG-16141-B	Approval is subject to approval of coordination package between multi-discipline.
142.	93M-0476-ACC-60DEP-DWG-16142-B	Approval is subject to approval of coordination package between multi-discipline.
143.	93M-0476-ACC-60DEP-DWG-16143-B	Approval is subject to approval of coordination package between multi-discipline.

144.	93M-0476-ACC-60DEP-DWG-16144-B	Approval is subject to approval of coordination package between multi-discipline.
145.	93M-0476-ACC-60DEP-DWG-16145-B	Approval is subject to approval of coordination package between multi-discipline.
146.	93M-0476-ACC-60DEP-DWG-16146-B	Approval is subject to approval of coordination package between multi-discipline.
147.	93M-0476-ACC-60DEP-DWG-16147-B	Approval is subject to approval of coordination package between multi-discipline.
148.	93M-0476-ACC-60DEP-DWG-16148-B	Approval is subject to approval of coordination package between multi-discipline.
149.	93M-0476-ACC-60DEP-DWG-16149-B	Approval is subject to approval of coordination package between multi-discipline.
150.	93M-0476-ACC-60DEP-DWG-16150-B	Approval is subject to approval of coordination package between multi-discipline.
151.	93M-0476-ACC-60DEP-DWG-16151-B	Approval is subject to approval of coordination package between multi-discipline.
152.	93M-0476-ACC-60DEP-DWG-16152-B	Approval is subject to approval of coordination package between multi-discipline.
153.	93M-0476-ACC-60DEP-DWG-16153-B	Approval is subject to approval of coordination package between multi-discipline.
154.	93M-0476-ACC-60DEP-DWG-16154-B	Approval is subject to approval of coordination package between multi-discipline.
155.	93M-0476-ACC-60DEP-DWG-16155-B	Approval is subject to approval of coordination package between multi-discipline.
156.	93M-0476-ACC-60DEP-DWG-16156-B	Approval is subject to approval of coordination package between multi-discipline.
157.	93M-0476-ACC-60DEP-DWG-16157-B	Approval is subject to approval of coordination package between multi-discipline.
158.	93M-0476-ACC-60DEP-DWG-16158-B	Approval is subject to approval of coordination package between multi-discipline.
159.	93M-0476-ACC-60DEP-DWG-16159-B	Approval is subject to approval of coordination package between multi-discipline.
160.	93M-0476-ACC-60DEP-DWG-16160-B	Approval is subject to approval of coordination package between multi-discipline.
161.	93M-0476-ACC-60DEP-DWG-16161-B	Approval is subject to approval of coordination package between multi-discipline.
162.	93M-0476-ACC-60DEP-DWG-16162-B	Approval is subject to approval of coordination package between multi-discipline.
163.	93M-0476-ACC-60DEP-DWG-16163-B	Approval is subject to approval of coordination package between multi-discipline.
164.	93M-0476-ACC-60DEP-DWG-16164-B	Approval is subject to approval of coordination package between multi-discipline.
165.	93M-0476-ACC-60DEP-DWG-16165-B	Approval is subject to approval of coordination package between multi-discipline.

166.	93M-0476-ACC-60DEP-DWG-16166-B	Approval is subject to approval of coordination package between multi-discipline.
167.	93M-0476-ACC-60DEP-DWG-16167-B	Approval is subject to approval of coordination package between multi-discipline.
168.	93M-0476-ACC-60DEP-DWG-16168-B	Approval is subject to approval of coordination package between multi-discipline.
169.	93M-0476-ACC-60DEP-DWG-16169-B	Approval is subject to approval of coordination package between multi-discipline.
170.	93M-0476-ACC-60DEP-DWG-16170-B	Approval is subject to approval of coordination package between multi-discipline.
171.	93M-0476-ACC-60DEP-DWG-16171-B	Approval is subject to approval of coordination package between multi-discipline.
172.	93M-0476-ACC-60DEP-DWG-16172-B	Approval is subject to approval of coordination package between multi-discipline.
173.	93M-0476-ACC-60DEP-DWG-16173-B	Approval is subject to approval of coordination package between multi-discipline.
174.	93M-0476-ACC-60DEP-DWG-16174-B	Approval is subject to approval of coordination package between multi-discipline.
175.	93M-0476-ACC-60DEP-DWG-16175-B	Approval is subject to approval of coordination package between multi-discipline.
176.	93M-0476-ACC-60DEP-DWG-16176-B	Approval is subject to approval of coordination package between multi-discipline.
177.	93M-0476-ACC-60DEP-DWG-16177-B	Approval is subject to approval of coordination package between multi-discipline.
178.	93M-0476-ACC-60DEP-DWG-16178-B	Approval is subject to approval of coordination package between multi-discipline.
179.	93M-0476-ACC-60DEP-DWG-16179-B	Approval is subject to approval of coordination package between multi-discipline.
180.	93M-0476-ACC-60DEP-DWG-16180-B	Approval is subject to approval of coordination package between multi-discipline.
181.	93M-0476-ACC-60DEP-DWG-16181-B	Approval is subject to approval of coordination package between multi-discipline.
182.	93M-0476-ACC-60DEP-DWG-16182-B	Approval is subject to approval of coordination package between multi-discipline.
183.	93M-0476-ACC-60DEP-DWG-16183-B	Approval is subject to approval of coordination package between multi-discipline.
184.	93M-0476-ACC-60DEP-DWG-16184-B	Approval is subject to approval of coordination package between multi-discipline.
185.	93M-0476-ACC-60DEP-DWG-16185-B	Approval is subject to approval of coordination package between multi-discipline.
186.	93M-0476-ACC-60DEP-DWG-16186-B	Approval is subject to approval of coordination package between multi-discipline.
187.	93M-0476-ACC-60DEP-DWG-16187-B	Approval is subject to approval of coordination package between multi-discipline.

188.	93M-0476-ACC-60DEP-DWG-16188-B	Approval is subject to approval of coordination package between multi-discipline.
189.	93M-0476-ACC-60DEP-DWG-16189-B	Approval is subject to approval of coordination package between multi-discipline.
190.	93M-0476-ACC-60DEP-DWG-16190-B	Approval is subject to approval of coordination package between multi-discipline.
191.	93M-0476-ACC-60DEP-DWG-16191-B	Approval is subject to approval of coordination package between multi-discipline.
192.	93M-0476-ACC-60DEP-DWG-16192-B	Approval is subject to approval of coordination package between multi-discipline.
193.	93M-0476-ACC-60DEP-DWG-16193-B	Approval is subject to approval of coordination package between multi-discipline.
194.	93M-0476-ACC-60DEP-DWG-16194-B	Approval is subject to approval of coordination package between multi-discipline.
195.	93M-0476-ACC-60DEP-DWG-16195-B	Approval is subject to approval of coordination package between multi-discipline.
196.	93M-0476-ACC-60DEP-DWG-16196-B	Approval is subject to approval of coordination package between multi-discipline.
197.	93M-0476-ACC-60DEP-DWG-16197-B	Approval is subject to approval of coordination package between multi-discipline.
198.	93M-0476-ACC-60DEP-DWG-16198-B	Approval is subject to approval of coordination package between multi-discipline.
199.	93M-0476-ACC-60DEP-DWG-16199-B	Approval is subject to approval of coordination package between multi-discipline.
200.	93M-0476-ACC-60DEP-DWG-16200-B	Approval is subject to approval of coordination package between multi-discipline.
201.	93M-0476-ACC-60DEP-DWG-16201-B	Approval is subject to approval of coordination package between multi-discipline.
202.	93M-0476-ACC-60DEP-DWG-16202-B	Approval is subject to approval of coordination package between multi-discipline.
203.	93M-0476-ACC-60DEP-DWG-16203-B	Approval is subject to approval of coordination package between multi-discipline.
204.	93M-0476-ACC-60DEP-DWG-16204-B	Approval is subject to approval of coordination package between multi-discipline.
205.	93M-0476-ACC-60DEP-DWG-16205-B	Approval is subject to approval of coordination package between multi-discipline.
206.	93M-0476-ACC-60DEP-DWG-16206-B	Approval is subject to approval of coordination package between multi-discipline.
207.	93M-0476-ACC-60DEP-DWG-16207-B	Approval is subject to approval of coordination package between multi-discipline.
208.	93M-0476-ACC-60DEP-DWG-16208-B	Approval is subject to approval of coordination package between multi-discipline.
209.	93M-0476-ACC-60DEP-DWG-16209-B	Approval is subject to approval of coordination package between multi-discipline.

210.	93M-0476-ACC-60DEP-DWG-16210-B	Approval is subject to approval of coordination package between multi-discipline.
211.	93M-0476-ACC-60DEP-DWG-16211-B	Approval is subject to approval of coordination package between multi-discipline.
212.	93M-0476-ACC-60DEP-DWG-16212-B	Approval is subject to approval of coordination package between multi-discipline.
213.	93M-0476-ACC-60DEP-DWG-16213-B	Approval is subject to approval of coordination package between multi-discipline.
214.	93M-0476-ACC-60DEP-DWG-16214-B	Same comments as 93M-0476-ACC-60DEP-DWG-16053-B.
215.	93M-0476-ACC-60DEP-DWG-16215-B	Same comments as 93M-0476-ACC-60DEP-DWG-16053-B.
216.	93M-0476-ACC-60DEP-DWG-16216-B	Approval is subject to approval of coordination package between multi-discipline.
217.	93M-0476-ACC-60DEP-DWG-16217-B	Approval is subject to approval of coordination package between multi-discipline.
218.	93M-0476-ACC-60DEP-DWG-16218-B	Approval is subject to approval of coordination package between multi-discipline.
219.	93M-0476-ACC-60DEP-DWG-16219-B	Same comments as 93M-0476-ACC-60DEP-DWG-16053-B.
220.	93M-0476-ACC-60DEP-DWG-16220-B	Same comments as 93M-0476-ACC-60DEP-DWG-16053-B.
221.	93M-0476-ACC-60DEP-DWG-16221-B	Same comments as 93M-0476-ACC-60DEP-DWG-16053-B.
222.	93M-0476-ACC-60DEP-DWG-16222-B	Same comments as 93M-0476-ACC-60DEP-DWG-16053-B.
223.	93M-0476-ACC-60DEP-DWG-16223-B	Same comments as 93M-0476-ACC-60DEP-DWG-16053-B.
224.	93M-0476-ACC-60DEP-DWG-16224-B	Same comments as 93M-0476-ACC-60DEP-DWG-16053-B.
225.	93M-0476-ACC-60DEP-DWG-16225-B	Same comments as 93M-0476-ACC-60DEP-DWG-16053-B.
226.	93M-0476-ACC-60DEP-DWG-16226-B	Same comments as 93M-0476-ACC-60DEP-DWG-16053-B.
227.	93M-0476-ACC-60DEP-DWG-16227-B	Same comments as 93M-0476-ACC-60DEP-DWG-16053-B.
228.	93M-0476-ACC-60DEP-DWG-16228-B	Same comments as 93M-0476-ACC-60DEP-DWG-16053-B.
229.	93M-0476-ACC-60DEP-DWG-16229-B	Same comments as 93M-0476-ACC-60DEP-DWG-16053-B.
230.	93M-0476-ACC-60DEP-DWG-16230-B	Same comments as 93M-0476-ACC-60DEP-DWG-16053-B.

231.	93M-0476-ACC-60DEP-DWG-16231-B	Same comments as 93M-0476-ACC-60DEP-DWG-16053-B.
232.	93M-0476-ACC-60DEP-DWG-16232-B	Same comments as 93M-0476-ACC-60DEP-DWG-16053-B.
233.	93M-0476-ACC-60DEP-DWG-16233-B	Same comments as 93M-0476-ACC-60DEP-DWG-16053-B.
234.	93M-0476-ACC-60DEP-DWG-16234-B	Same comments as 93M-0476-ACC-60DEP-DWG-16053-B.
235.	93M-0476-ACC-60DEP-DWG-16235-B	Same comments as 93M-0476-ACC-60DEP-DWG-16053-B.
236.	93M-0476-ACC-60DEP-DWG-16236-B	Same comments as 93M-0476-ACC-60DEP-DWG-16053-B.
237.	93M-0476-ACC-60DEP-DWG-16237-B	Same comments as 93M-0476-ACC-60DEP-DWG-16053-B.
238.	93M-0476-ACC-60DEP-DWG-16238-B	Same comments as 93M-0476-ACC-60DEP-DWG-16053-B.
239.	93M-0476-ACC-60DEP-DWG-16239-B	Same comments as 93M-0476-ACC-60DEP-DWG-16053-B.
240.	93M-0476-ACC-60DEP-DWG-16240-B	Same comments as 93M-0476-ACC-60DEP-DWG-16053-B.
241.	93M-0476-ACC-60DEP-DWG-16241-B	Same comments as 93M-0476-ACC-60DEP-DWG-16053-B.
242.	93M-0476-ACC-60DEP-DWG-16242-B	Same comments as 93M-0476-ACC-60DEP-DWG-16053-B.
243.	93M-0476-ACC-60DEP-DWG-16243-B	Same comments as 93M-0476-ACC-60DEP-DWG-16053-B.
244.	93M-0476-ACC-60DEP-DWG-16244-B	Same comments as 93M-0476-ACC-60DEP-DWG-16053-B.
245.	93M-0476-ACC-60DEP-DWG-16245-B	Same comments as 93M-0476-ACC-60DEP-DWG-16053-B.
246.	93M-0476-ACC-60DEP-DWG-16246-B	Same comments as 93M-0476-ACC-60DEP-DWG-16053-B.
247.	93M-0476-ACC-60DEP-DWG-16247-B	Slot size is missing in the drawing.
248.	93M-0476-ACC-60DEP-DWG-16248-B	Same comments as 93M-0476-ACC-60DEP-DWG-16053-B.
249.	93M-0476-ACC-60DEP-DWG-16249-B	Same comments as 93M-0476-ACC-60DEP-DWG-16053-B.
250.	93M-0476-ACC-60DEP-DWG-16250-B	Same comments as 93M-0476-ACC-60DEP-DWG-16053-B.
251.	93M-0476-ACC-60DEP-DWG-16251-B	Same comments as 93M-0476-ACC-60DEP-DWG-16053-B.

252.	93M-0476-ACC-60DEP-DWG-16252-B	Same comments as 93M-0476-ACC-60DEP-DWG-16247-B.
253.	93M-0476-ACC-60DEP-DWG-16253-B	Same comments as 93M-0476-ACC-60DEP-DWG-16247-B.
254.	93M-0476-ACC-60DEP-DWG-16254-B	Same comments as 93M-0476-ACC-60DEP-DWG-16247-B.
255.	93M-0476-ACC-60DEP-DWG-16255-B	Approval is subject to approval of coordination package between multi-discipline.
256.	93M-0476-ACC-60DEP-DWG-16256-B	Approval is subject to approval of coordination package between multi-discipline.
257.	93M-0476-ACC-60DEP-DWG-16257-B	Approval is subject to approval of coordination package between multi-discipline.
258.	93M-0476-ACC-60DEP-DWG-16258-B	Approval is subject to approval of coordination package between multi-discipline.
259.	93M-0476-ACC-60DEP-DWG-16259-B	Approval is subject to approval of coordination package between multi-discipline.
260.	93M-0476-ACC-60DEP-DWG-16260-B	Approval is subject to approval of coordination package between multi-discipline.
261.	93M-0476-ACC-60DEP-DWG-16261-B	Approval is subject to approval of coordination package between multi-discipline.
262.	93M-0476-ACC-60DEP-DWG-16262-B	Approval is subject to approval of coordination package between multi-discipline.
263.	93M-0476-ACC-60DEP-DWG-16263-B	Approval is subject to approval of coordination package between multi-discipline.
264.	93M-0476-ACC-60DEP-DWG-16264-B	Approval is subject to approval of coordination package between multi-discipline.
265.	93M-0476-ACC-60DEP-DWG-16265-B	Approval is subject to approval of coordination package between multi-discipline.
266.	93M-0476-ACC-60DEP-DWG-16266-B	Approval is subject to approval of coordination package between multi-discipline.
267.	93M-0476-ACC-60DEP-DWG-16267-B	Approval is subject to approval of coordination package between multi-discipline.
268.	93M-0476-ACC-60DEP-DWG-16268-B	Approval is subject to approval of coordination package between multi-discipline.
269.	93M-0476-ACC-60DEP-DWG-16269-B	Approval is subject to approval of coordination package between multi-discipline.
270.	93M-0476-ACC-60DEP-DWG-16270-B	Approval is subject to approval of coordination package between multi-discipline.
271.	93M-0476-ACC-60DEP-DWG-16271-B	Approval is subject to approval of coordination package between multi-discipline.
272.	93M-0476-ACC-60DEP-DWG-16272-B	Approval is subject to approval of coordination package between multi-discipline.
273.	93M-0476-ACC-60DEP-DWG-16273-B	Approval is subject to approval of coordination package between multi-discipline.

274.	93M-0476-ACC-60DEP-DWG-16274-B	Approval is subject to approval of coordination package between multi-discipline.
275.	93M-0476-ACC-60DEP-DWG-16275-B	Approval is subject to approval of coordination package between multi-discipline.
276.	93M-0476-ACC-60DEP-DWG-16276-B	Approval is subject to approval of coordination package between multi-discipline.
277.	93M-0476-ACC-60DEP-DWG-16277-B	Approval is subject to approval of coordination package between multi-discipline.
278.	93M-0476-ACC-60DEP-DWG-16278-B	Approval is subject to approval of coordination package between multi-discipline.
279.	93M-0476-ACC-60DEP-DWG-16279-B	Approval is subject to approval of coordination package between multi-discipline.
280.	93M-0476-ACC-60DEP-DWG-16280-B	Approval is subject to approval of coordination package between multi-discipline.
281.	93M-0476-ACC-60DEP-DWG-16281-B	Approval is subject to approval of coordination package between multi-discipline.
282.	93M-0476-ACC-60DEP-DWG-16282-B	Approval is subject to approval of coordination package between multi-discipline.
283.	93M-0476-ACC-60DEP-DWG-16283-B	Approval is subject to approval of coordination package between multi-discipline.
284.	93M-0476-ACC-60DEP-DWG-16284-B	Approval is subject to approval of coordination package between multi-discipline.
285.	93M-0476-ACC-60DEP-DWG-16285-B	Approval is subject to approval of coordination package between multi-discipline.
286.	93M-0476-ACC-60DEP-DWG-16286-B	Approval is subject to approval of coordination package between multi-discipline.
287.	93M-0476-ACC-60DEP-DWG-16287-B	Approval is subject to approval of coordination package between multi-discipline.
288.	93M-0476-ACC-60DEP-DWG-16288-B	Approval is subject to approval of coordination package between multi-discipline.
289.	93M-0476-ACC-60DEP-DWG-16289-B	Approval is subject to approval of coordination package between multi-discipline.
290.	93M-0476-ACC-60DEP-DWG-16290-B	Approval is subject to approval of coordination package between multi-discipline.
291.	93M-0476-ACC-60DEP-DWG-16291-B	Approval is subject to approval of coordination package between multi-discipline.
292.	93M-0476-ACC-60DEP-DWG-16292-B	Approval is subject to approval of coordination package between multi-discipline.
293.	93M-0476-ACC-60DEP-DWG-16293-B	Approval is subject to approval of coordination package between multi-discipline.
294.	93M-0476-ACC-60DEP-DWG-16294-B	Approval is subject to approval of coordination package between multi-discipline.
295.	93M-0476-ACC-60DEP-DWG-16295-B	Approval is subject to approval of coordination package between multi-discipline.

296.	93M-0476-ACC-60DEP-DWG-16296-B	Approval is subject to approval of coordination package between multi-discipline.
297.	93M-0476-ACC-60DEP-DWG-16297-B	Approval is subject to approval of coordination package between multi-discipline.
298.	93M-0476-ACC-60DEP-DWG-16298-B	Approval is subject to approval of coordination package between multi-discipline.
299.	93M-0476-ACC-60DEP-DWG-16299-B	Approval is subject to approval of coordination package between multi-discipline.
300.	93M-0476-ACC-60DEP-DWG-16300-B	Approval is subject to approval of coordination package between multi-discipline.
301.	93M-0476-ACC-60DEP-DWG-16301-B	Approval is subject to approval of coordination package between multi-discipline.
302.	93M-0476-ACC-60DEP-DWG-16302-B	Approval is subject to approval of coordination package between multi-discipline.
303.	93M-0476-ACC-60DEP-DWG-16303-B	Approval is subject to approval of coordination package between multi-discipline.
304.	93M-0476-ACC-60DEP-DWG-16304-B	Approval is subject to approval of coordination package between multi-discipline.
305.	93M-0476-ACC-60DEP-DWG-16305-B	Approval is subject to approval of coordination package between multi-discipline.
306.	93M-0476-ACC-60DEP-DWG-16306-B	Approval is subject to approval of coordination package between multi-discipline.
307.	93M-0476-ACC-60DEP-DWG-16307-B	Approval is subject to approval of coordination package between multi-discipline.
308.	93M-0476-ACC-60DEP-DWG-16308-B	Approval is subject to approval of coordination package between multi-discipline.
309.	93M-0476-ACC-60DEP-DWG-16309-B	Approval is subject to approval of coordination package between multi-discipline.
310.	93M-0476-ACC-60DEP-DWG-16310-B	Approval is subject to approval of coordination package between multi-discipline.
311.	93M-0476-ACC-60DEP-DWG-16311-B	Approval is subject to approval of coordination package between multi-discipline.
312.	93M-0476-ACC-60DEP-DWG-16312-B	Approval is subject to approval of coordination package between multi-discipline.
313.	93M-0476-ACC-60DEP-DWG-16313-B	Approval is subject to approval of coordination package between multi-discipline.
314.	93M-0476-ACC-60DEP-DWG-16314-B	Approval is subject to approval of coordination package between multi-discipline.
315.	93M-0476-ACC-60DEP-DWG-16315-B	Approval is subject to approval of coordination package between multi-discipline.
316.	93M-0476-ACC-60DEP-DWG-16316-B	Approval is subject to approval of coordination package between multi-discipline.
317.	93M-0476-ACC-60DEP-DWG-16317-B	Approval is subject to approval of coordination package between multi-discipline.

318.	93M-0476-ACC-60DEP-DWG-16318-B	Approval is subject to approval of coordination package between multi-discipline.
319.	93M-0476-ACC-60DEP-DWG-16319-B	Approval is subject to approval of coordination package between multi-discipline.
320.	93M-0476-ACC-60DEP-DWG-16320-B	Approval is subject to approval of coordination package between multi-discipline.
321.	93M-0476-ACC-60DEP-DWG-16321-B	Approval is subject to approval of coordination package between multi-discipline.
322.	93M-0476-ACC-60DEP-DWG-16322-B	Approval is subject to approval of coordination package between multi-discipline.
323.	93M-0476-ACC-60DEP-DWG-16323-B	Approval is subject to approval of coordination package between multi-discipline.
324.	93M-0476-ACC-60DEP-DWG-16324-B	Approval is subject to approval of coordination package between multi-discipline.
325.	93M-0476-ACC-60DEP-DWG-16325-B	Approval is subject to approval of coordination package between multi-discipline.
326.	93M-0476-ACC-60DEP-DWG-16326-B	Approval is subject to approval of coordination package between multi-discipline.
327.	93M-0476-ACC-60DEP-DWG-16327-B	Approval is subject to approval of coordination package between multi-discipline.
328.	93M-0476-ACC-60DEP-DWG-16328-B	Approval is subject to approval of coordination package between multi-discipline.
329.	93M-0476-ACC-60DEP-DWG-16329-B	Approval is subject to approval of coordination package between multi-discipline.
330.	93M-0476-ACC-60DEP-DWG-16330-B	Approval is subject to approval of coordination package between multi-discipline.
331.	93M-0476-ACC-60DEP-DWG-16331-B	Approval is subject to approval of coordination package between multi-discipline.
332.	93M-0476-ACC-60DEP-DWG-16332-B	Approval is subject to approval of coordination package between multi-discipline.
333.	93M-0476-ACC-60DEP-DWG-16333-B	Approval is subject to approval of coordination package between multi-discipline.
334.	93M-0476-ACC-60DEP-DWG-16334-B	Approval is subject to approval of coordination package between multi-discipline.
335.	93M-0476-ACC-60DEP-DWG-16335-B	Approval is subject to approval of coordination package between multi-discipline.
336.	93M-0476-ACC-60DEP-DWG-16336-B	Approval is subject to approval of coordination package between multi-discipline.
337.	93M-0476-ACC-60DEP-DWG-16337-B	Approval is subject to approval of coordination package between multi-discipline.
338.	93M-0476-ACC-60DEP-DWG-16338-B	Approval is subject to approval of coordination package between multi-discipline.
339.	93M-0476-ACC-60DEP-DWG-16339-B	Approval is subject to approval of coordination package between multi-discipline.

340.	93M-0476-ACC-60DEP-DWG-16340-B	Approval is subject to approval of coordination package between multi-discipline.
341.	93M-0476-ACC-60DEP-DWG-16341-B	Approval is subject to approval of coordination package between multi-discipline.
342.	93M-0476-ACC-60DEP-DWG-16342-B	Approval is subject to approval of coordination package between multi-discipline.
343.	93M-0476-ACC-60DEP-DWG-16343-B	Approval is subject to approval of coordination package between multi-discipline.
344.	93M-0476-ACC-60DEP-DWG-16344-B	Approval is subject to approval of coordination package between multi-discipline.
345.	93M-0476-ACC-60DEP-DWG-16345-B	Approval is subject to approval of coordination package between multi-discipline.
346.	93M-0476-ACC-60DEP-DWG-16346-B	Approval is subject to approval of coordination package between multi-discipline.
347.	93M-0476-ACC-60DEP-DWG-16347-B	Approval is subject to approval of coordination package between multi-discipline.
348.	93M-0476-ACC-60DEP-DWG-16348-B	Approval is subject to approval of coordination package between multi-discipline.
349.	93M-0476-ACC-60DEP-DWG-16349-B	Approval is subject to approval of coordination package between multi-discipline.
350.	93M-0476-ACC-60DEP-DWG-16350-B	Approval is subject to approval of coordination package between multi-discipline.
351.	93M-0476-ACC-60DEP-DWG-16351-B	Approval is subject to approval of coordination package between multi-discipline.
352.	93M-0476-ACC-60DEP-DWG-16352-B	Approval is subject to approval of coordination package between multi-discipline.
353.	93M-0476-ACC-60DEP-DWG-16353-B	Approval is subject to approval of coordination package between multi-discipline.
354.	93M-0476-ACC-60DEP-DWG-16354-B	Approval is subject to approval of coordination package between multi-discipline.
355.	93M-0476-ACC-60DEP-DWG-16355-B	Approval is subject to approval of coordination package between multi-discipline.
356.	93M-0476-ACC-60DEP-DWG-16356-B	Approval is subject to approval of coordination package between multi-discipline.
357.	93M-0476-ACC-60DEP-DWG-16357-B	Approval is subject to approval of coordination package between multi-discipline.
358.	93M-0476-ACC-60DEP-DWG-16358-B	Approval is subject to approval of coordination package between multi-discipline.
359.	93M-0476-ACC-60DEP-DWG-16359-B	Approval is subject to approval of coordination package between multi-discipline.
360.	93M-0476-ACC-60DEP-DWG-16360-B	Approval is subject to approval of coordination package between multi-discipline.
361.	93M-0476-ACC-60DEP-DWG-16361-B	Approval is subject to approval of coordination package between multi-discipline.

362.	93M-0476-ACC-60DEP-DWG-16362-B	Approval is subject to approval of coordination package between multi-discipline.
363.	93M-0476-ACC-60DEP-DWG-16363-B	Approval is subject to approval of coordination package between multi-discipline.
364.	93M-0476-ACC-60DEP-DWG-16364-B	Approval is subject to approval of coordination package between multi-discipline.
365.	93M-0476-ACC-60DEP-DWG-16365-B	Approval is subject to approval of coordination package between multi-discipline.
366.	93M-0476-ACC-60DEP-DWG-16366-B	Approval is subject to approval of coordination package between multi-discipline.
367.	93M-0476-ACC-60DEP-DWG-16367-B	Approval is subject to approval of coordination package between multi-discipline.
368.	93M-0476-ACC-60DEP-DWG-16368-B	Approval is subject to approval of coordination package between multi-discipline.
369.	93M-0476-ACC-60DEP-DWG-16369-B	Approval is subject to approval of coordination package between multi-discipline.
370.	93M-0476-ACC-60DEP-DWG-16370-B	Approval is subject to approval of coordination package between multi-discipline.
371.	93M-0476-ACC-60DEP-DWG-16371-B	Approval is subject to approval of coordination package between multi-discipline.
372.	93M-0476-ACC-60DEP-DWG-16372-B	Approval is subject to approval of coordination package between multi-discipline.
373.	93M-0476-ACC-60DEP-DWG-16373-B	Approval is subject to approval of coordination package between multi-discipline.
374.	93M-0476-ACC-60DEP-DWG-16374-B	Approval is subject to approval of coordination package between multi-discipline.
375.	93M-0476-ACC-60DEP-DWG-16375-B	Approval is subject to approval of coordination package between multi-discipline.
376.	93M-0476-ACC-60DEP-DWG-16376-B	Approval is subject to approval of coordination package between multi-discipline.
377.	93M-0476-ACC-60DEP-DWG-16377-B	Approval is subject to approval of coordination package between multi-discipline.
378.	93M-0476-ACC-60DEP-DWG-16378-B	Approval is subject to approval of coordination package between multi-discipline.
379.	93M-0476-ACC-60DEP-DWG-16379-B	Approval is subject to approval of coordination package between multi-discipline.
380.	93M-0476-ACC-60DEP-DWG-16380-B	Approval is subject to approval of coordination package between multi-discipline.
381.	93M-0476-ACC-60DEP-DWG-16381-B	Approval is subject to approval of coordination package between multi-discipline.
382.	93M-0476-ACC-60DEP-DWG-16382-B	Approval is subject to approval of coordination package between multi-discipline.
383.	93M-0476-ACC-60DEP-DWG-16383-B	Approval is subject to approval of coordination package between multi-discipline.

384.	93M-0476-ACC-60DEP-DWG-16384-B	Approval is subject to approval of coordination package between multi-discipline.
385.	93M-0476-ACC-60DEP-DWG-16385-B	Approval is subject to approval of coordination package between multi-discipline.
386.	93M-0476-ACC-60DEP-DWG-16386-B	Approval is subject to approval of coordination package between multi-discipline.
387.	93M-0476-ACC-60DEP-DWG-16387-B	Approval is subject to approval of coordination package between multi-discipline.
388.	93M-0476-ACC-60DEP-DWG-16388-B	Approval is subject to approval of coordination package between multi-discipline.
389.	93M-0476-ACC-60DEP-DWG-16389-B	Approval is subject to approval of coordination package between multi-discipline.
390.	93M-0476-ACC-60DEP-DWG-16390-B	Approval is subject to approval of coordination package between multi-discipline.
391.	93M-0476-ACC-60DEP-DWG-16391-B	Approval is subject to approval of coordination package between multi-discipline.
392.	93M-0476-ACC-60DEP-DWG-16392-B	Approval is subject to approval of coordination package between multi-discipline.
393.	93M-0476-ACC-60DEP-DWG-16393-B	Approval is subject to approval of coordination package between multi-discipline.
394.	93M-0476-ACC-60DEP-DWG-16394-B	Approval is subject to approval of coordination package between multi-discipline.
395.	93M-0476-ACC-60DEP-DWG-16395-B	Approval is subject to approval of coordination package between multi-discipline.
396.	93M-0476-ACC-60DEP-DWG-16396-B	Approval is subject to approval of coordination package between multi-discipline.
397.	93M-0476-ACC-60DEP-DWG-16397-B	Approval is subject to approval of coordination package between multi-discipline.
398.	93M-0476-ACC-60DEP-DWG-16398-B	Approval is subject to approval of coordination package between multi-discipline.
399.	93M-0476-ACC-60DEP-DWG-16399-A	Approval is subject to approval of coordination package between multi-discipline.
400.	93M-0476-ACC-60DEP-DWG-16400-A	Approval is subject to approval of coordination package between multi-discipline.

1- It is the contractor responsibility to ensure and revise all Dimensions and levels with the approved design drawings besides the coordination package before commencing any site Works.
2- the embedded length of anchors must be matched with the approved design drawings.
3- follow all weld details (size , length & symbol) as design drawings.
4-The Contractor shall add clouds which show changes between this version and the previous one.

REVIEWED WITH COMMENT
MONORAILS PROJECT

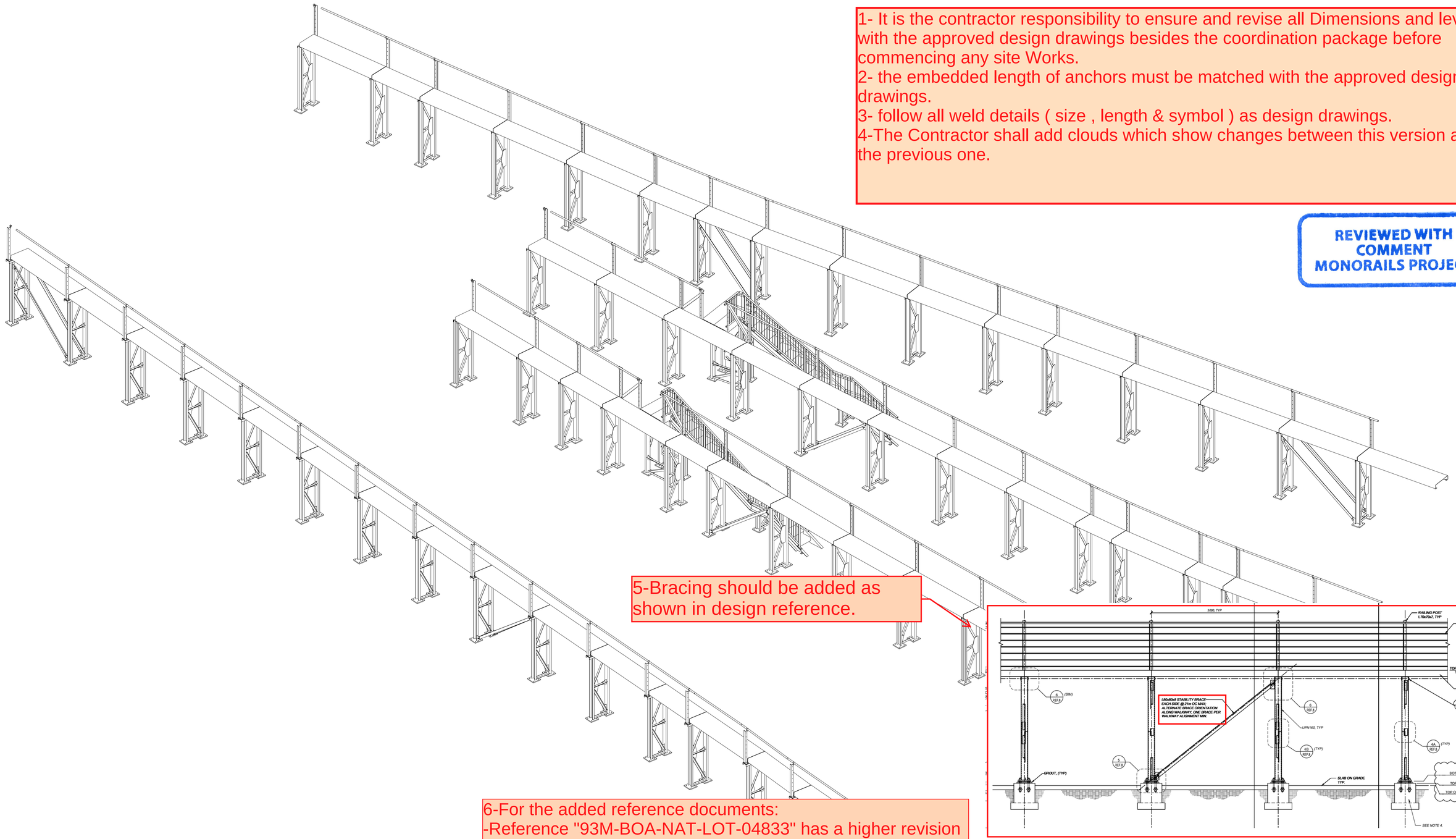

5-Bracing should be added as shown in design reference.

6-For the added reference documents:
-Reference "93M-BOA-NAT-LOT-04833" has a higher revision which is "93M-BOA-NAT-LOT-17034".
-Reference "93M-BOA-NAT-LOT-01976" has some drawings which have a "not approved" status and it's drs replies which is coded as 2 "approved as noted" are found in reference " 93M-BOA-NAT-LOT-07873" which should be added.
so please update the reference documents accordingly.

6 October Monorail
Engineering Unit
Valid For Construction

GENERAL NOTES:

1. THE DIMENSIONS SHOWN ARE NOMINAL (IN MILLIMETERS), U.N.O.
2. WELD SIZESHALL BE AISC MINIMUM OF 6 mm UNLESS NOTED OTHERWISE.
3. ALL FIELD WELDS SHALL BE INSPECTED PER QUALITY ASSURANCE AND SPECIAL INSPECTIONS.

REFERENCE DRAWINGS

1	93M-BOA-NAT-LOT-04833
2	93M-BOA-NAT-LOT-09170
3	93M-BOA-NAT-LOT-01976
4	93M-BOA-NAT-LOT-20021
5	
6	
7	
8	
9	

6TH OF OCTOBER CITY RAIL TRANSIT MONORAIL

The Authority | Consultant: Hill International | Main Contractor: ORASCOM CONSTRUCTION / BOMBARDIER | Structural Designer: INNOVA TELETRANSPORTATION

KEY PLAN:

SCALE: AS SHOWN | SHOP DRAWING | DATE: 08/29/2023

REV	DATE	DSG.	CHK.	APP.	AMENDMENTS	STATUS
B	08/29/2023	M.KH	M.KH	DR.M.M	ISSUED FOR INFORMATION	IFI
A	09/21/2022	M.KH	M.KH	DR.M.M	ISSUED FOR INFORMATION	IFI

DRAWING TITLE
6TH OF OCTOBER MONORAIL
SERVICE WALKWAY
ZONE (1016)
3D VIEW

Project Code	Rubric	Initiator	Lot	Ref	Number	Revision
93M	047	6ACC	60DEP	DWG	16001	B

Tekla structures

Type	NAME	Point	Easting	Northing
SWF	20013	P1	599820.121	797864.949
SWF	20013	P2	599820.673	797865.183
SWF	20014	P3	599819.019	797867.734
SWF	20014	P4	599819.582	797867.942
SWF	20015	P5	599818.052	797870.572
SWF	20015	P6	599818.620	797870.765
SWF	20016	P7	599817.313	797872.961
SWF	20016	P8	599817.881	797873.155
SWF	20017	P9	599816.345	797875.800
SWF	20017	P10	599816.913	797875.994
SWF	20018	P11	599815.667	797877.789
SWF	20018	P12	599816.235	797877.983
SWF	20019	P13	599814.698	797880.629
SWF	20019	P14	599815.266	797880.822
SWF	20020	P15	599813.730	797883.468
SWF	20020	P16	599814.298	797883.662
SWF	20021	P17	599812.762	797886.308
SWF	20021	P18	599813.330	797886.501
SWF	20022	P19	599811.793	797889.147
SWF	20022	P20	599812.361	797889.341
SWF	20023	P21	599810.825	797891.986
SWF	20023	P22	599811.393	797892.180
SWF	20024	P23	599809.857	797894.826
SWF	20024	P24	599810.425	797895.019
SWF	20025	P25	599808.889	797897.665
SWF	20025	P26	599809.456	797897.859
SWF	20026	P27	599807.920	797900.505
SWF	20026	P28	599808.488	797900.698
SWF	20027	P29	599806.952	797903.344
SWF	20027	P30	599807.520	797903.538
SWF	20028	P31	599805.984	797906.184
SWF	20028	P32	599806.552	797906.377
SWF	20029	P33	599805.015	797909.023
SWF	20029	P34	599805.583	797909.217
SWF	19013	P35	599829.155	797873.469
SWF	19013	P36	599829.685	797873.749
SWF	19014	P37	599827.813	797876.147
SWF	19014	P38	599828.355	797876.404
SWF	19015	P39	599826.590	797878.882
SWF	19015	P40	599827.143	797879.114
SWF	19016	P41	599825.357	797881.618
SWF	19016	P42	599825.910	797881.850
SWF	19017	P43	599824.125	797884.352
SWF	19017	P44	599824.678	797884.585
SWF	19018	P45	599822.961	797887.119
SWF	19018	P46	599823.514	797887.351
SWF	19019	P47	599821.797	797889.884
SWF	19019	P48	599822.350	797890.116
SWF	19020	P49	599821.021	797891.727
SWF	19020	P50	599821.574	797891.960
SWF	19021	P51	599819.857	797894.492
SWF	19021	P52	599820.410	797894.725
SWF	19022	P53	599819.081	797896.335
SWF	19022	P54	599819.634	797896.568
SWF	19023	P55	599818.305	797898.179
SWF	19023	P56	599818.858	797898.411
SWF	19024	P57	599817.141	797900.944
SWF	19024	P58	599817.694	797901.176
SSF	19034	P59	599823.400	797889.622
SSF	19034	P60	599823.936	797889.893
SQF	19035	P61	599821.640	797893.102
SQF	19035	P62	599822.175	797893.373
SQF	19035	P63	599821.189	797893.994
SQF	19035	P64	599821.724	797894.265
SWF	18012	P65	599836.674	797875.364
SWF	18012	P66	599837.153	797875.725
SWF	18013	P67	599834.927	797877.798
SWF	18013	P68	599835.421	797878.137
SWF	18014	P69	599834.085	797879.055
SWF	18014	P70	599834.587	797879.383
SWF	18015	P71	599832.503	797881.599
SWF	18015	P72	599833.019	797881.904
SWF	18016	P73	599831.746	797882.909
SWF	18016	P74	599832.269	797883.203
SWF	18017	P75	599830.336	797885.552
SWF	18017	P76	599830.871	797885.823
SWF	18018	P77	599828.915	797888.195
SWF	18018	P78	599829.450	797888.466
SWF	18019	P79	599827.495	797890.839
SWF	18019	P80	599828.030	797891.110

Type	NAME	Point	Easting	Northing
SWF	18020	P81	599826.140	797893.516
SWF	18020	P82	599826.676	797893.787
SWF	18021	P83	599824.786	797896.193
SWF	18021	P84	599825.322	797896.464
SWF	18022	P85	599823.432	797898.870
SWF	18022	P86	599823.968	797899.141
SWF	18023	P87	599822.078	797901.547
SWF	18023	P88	599822.614	797901.818
SWF	18024	P89	599820.724	797904.224
SWF	18024	P90	599821.260	797904.495
SSF	18029	P91	599827.926	797894.735
SSF	18029	P92	599828.401	797895.100
SQF	18030	P93	599825.583	797897.850
SQF	18030	P94	599826.062	797898.211
SQF	18030	P95	599824.981	797898.649
SQF	18030	P96	599825.461	797899.010
SWF	17010	P97	599841.467	797883.717
SWF	17010	P98	599841.946	797884.078
SWF	17011	P99	599839.664	797886.115
SWF	17011	P100	599840.143	797886.475
SWF	17012	P101	599837.861	797888.512
SWF	17012	P102	599838.340	797888.873
SWF	17013	P103	599836.057	797890.910
SWF	17013	P104	599836.537	797891.271
SWF	17014	P105	599834.254	797893.308
SWF	17014	P106	599834.734	797893.668
SWF	17015	P107	599832.889	797895.122
SWF	17015	P108	599833.369	797895.483
SWF	17016	P109	599831.128	797897.551
SWF	17016	P110	599831.607	797897.912
SWF	17017	P111	599829.366	797899.980
SWF	17017	P112	599829.846	797900.341
SWF	17018	P113	599827.601	797902.403
SWF	17018	P114	599828.092	797902.748
SWF	17019	P115	599826.336	797904.251
SWF	17019	P116	599826.835	797904.584
SWF	17020	P117	599825.106	797906.118
SWF	17020	P118	599825.611	797906.441
SWF	17021	P119	599823.531	797908.668
SWF	17021	P120	599824.046	797908.975
SWF	17022	P121	599821.949	797911.217
SWF	17022	P122	599822.464	797911.525
SWF	17023	P123	599820.366	797913.767
SWF	17023	P124	599820.882	797914.074
SWF	17024	P125	599819.343	797915.482
SWF	17024	P126	599819.858	797915.789
SWF	17025	P127	599817.805	797918.058
SWF	17025	P128	599818.321	797918.365

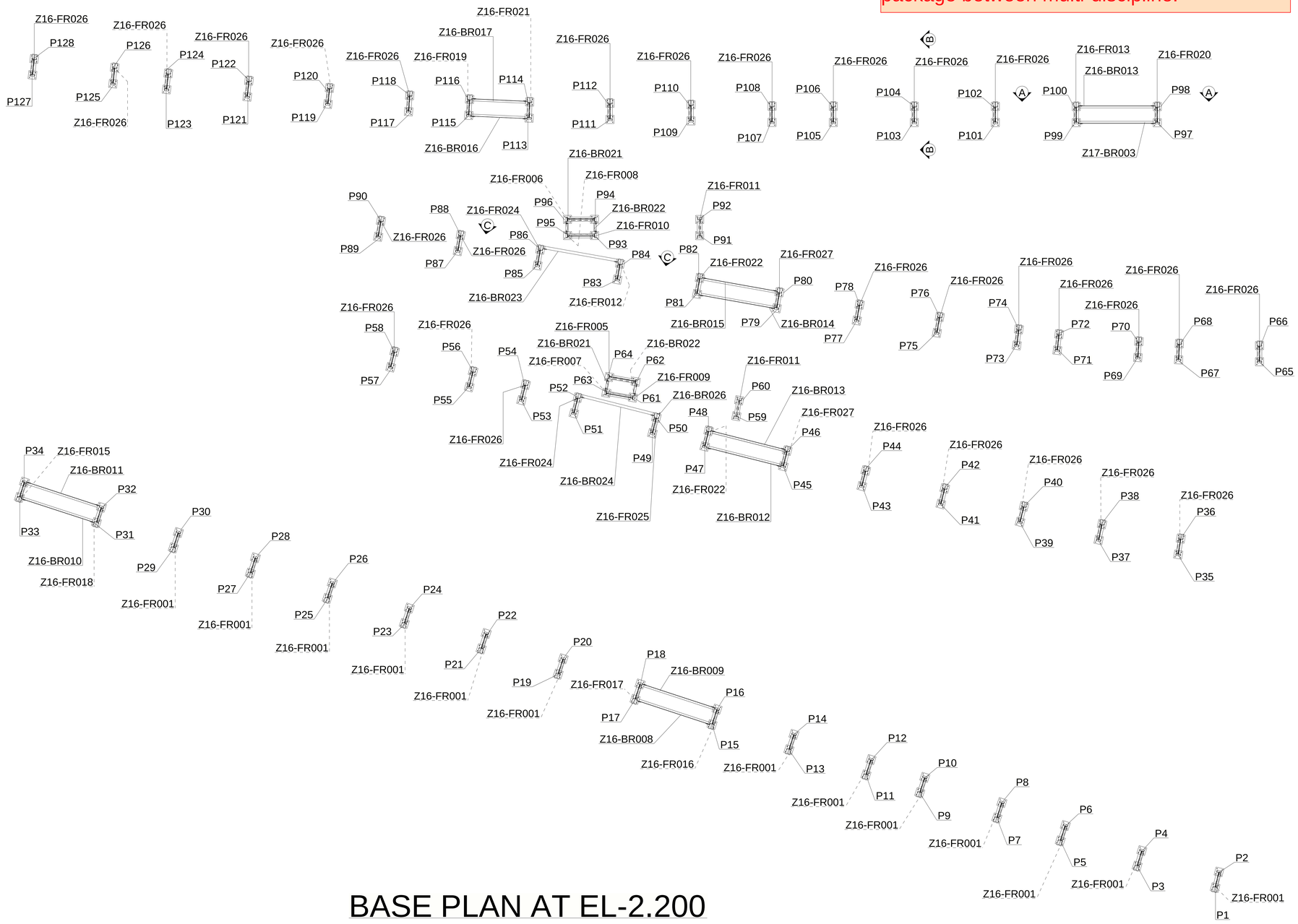

Approval is subject to approval of coordination package between multi-discipline.

BASE PLAN AT EL-2.200

6 October Monorail
Engineering Unit
Valid For Construction

REVIEWED WITH COMMENT
MONORAILS PROJECT

GENERAL NOTES:

1. THE DIMENSIONS SHOWN ARE NOMINAL (IN MILLIMETERS), U.N.O.
2. WELD SIZESHALL BE AISC MINIMUM OF 6 mm UNLESS NOTED OTHERWISE.
3. ALL FIELD WELDS SHALL BE INSPECTED PER QUALITY ASSURANCE AND SPECIAL INSPECTIONS.

REFERENCE DRAWINGS

1	93M-BOA-NAT-LOT-04833
2	93M-BOA-NAT-LOT-09170
3	93M-BOA-NAT-LOT-01976
4	93M-BOA-NAT-LOT-20021
5	
6	
7	
8	
9	

6TH OF OCTOBER CITY RAIL TRANSIT MONORAIL

The Authority | Consultant | Main Contractor | Structural Designer

KEY PLAN

SCALE: AS SHOWN | SHEET/DRAWING | DATE

REV	DATE	DSG.	CHK.	APP.	AMENDMENTS	STATUS
B	08/29/2023	M.KH	M.KH	DR.M.M	ISSUED FOR INFORMATION	IFI
A	09/21/2022	M.KH	M.KH	DR.M.M	ISSUED FOR INFORMATION	IFI

DRAWING TITLE
6TH OF OCTOBER MONORAIL
SERVICE WALKWAY
ZONE (1016)
BASE PLAN

Project Code	Rubric	Initiator	Lot	Ref	Number	Revision
93	M04	76	ACC60	DEP	DWG	16002	B

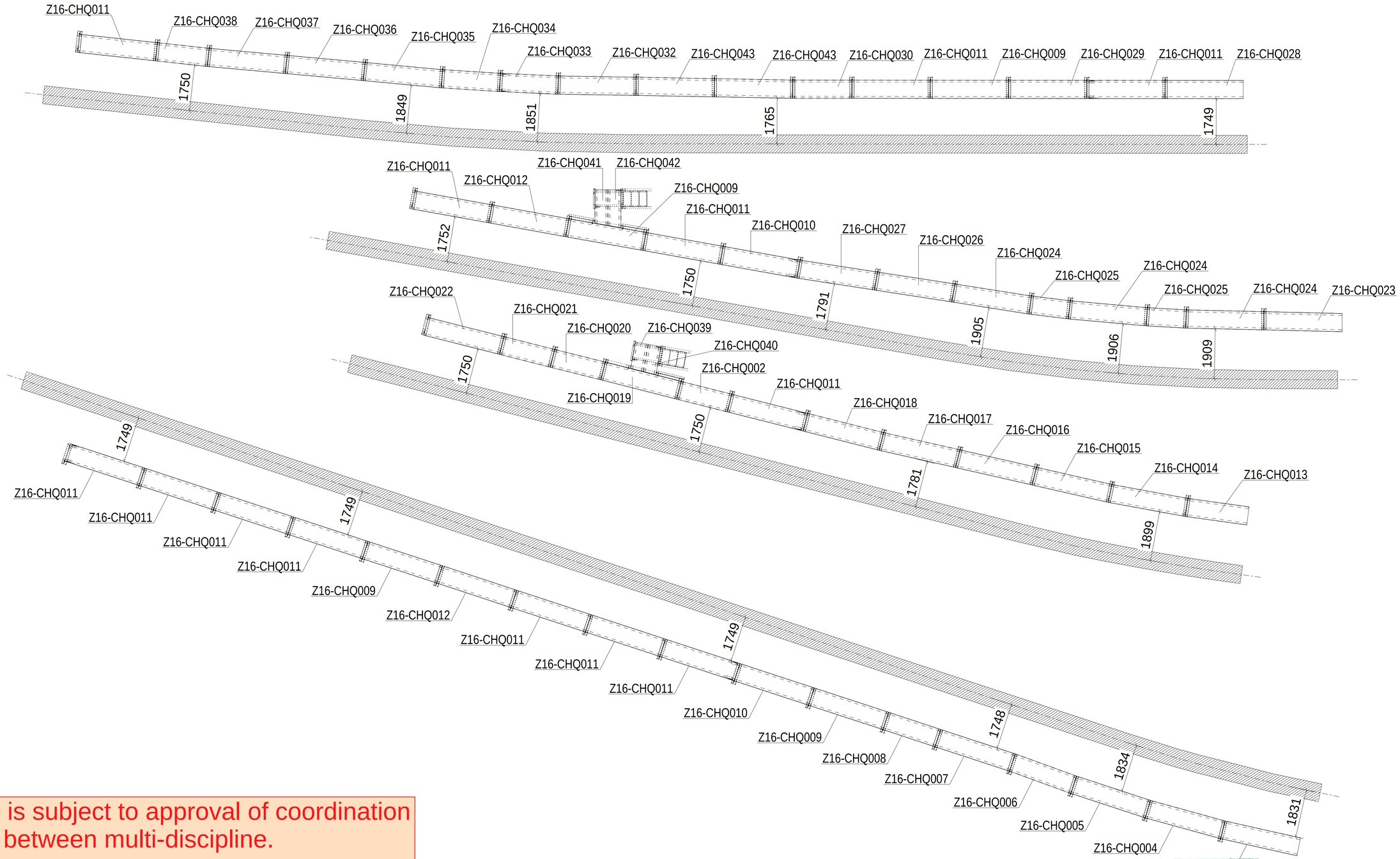

Approval is subject to approval of coordination package between multi-discipline.

REVIEWED WITH COMMENT
MONORAILS PROJECT

PLAN AT EL+0.350 T.O.G

6 October Monorail
Engineering Unit
Valid For Construction

GENERAL NOTES:

1. THE DIMENSIONS SHOWN ARE NOMINAL (IN MILLIMETERS), U.N.O.
2. WELD SIZESHALL BE AISC MINIMUM OF 6 mm UNLESS NOTED OTHERWISE.
3. ALL FIELD WELDS SHALL BE INSPECTED PER QUALITY ASSURANCE AND SPECIAL INSPECTIONS.

REFERENCE DRAWINGS

1	93M-BOA-NAT-LOT-04833
2	93M-BOA-NAT-LOT-09170
3	93M-BOA-NAT-LOT-01976
4	93M-BOA-NAT-LOT-20021
5	
6	
7	
8	
9	

6TH OF OCTOBER CITY RAIL TRANSIT MONORAIL

The Authority | Consultant: Hill International | Main Contractor: ORASCOM CONSTRUCTION, BOMBARDIER | Structural Designer: INNOVA TRANSPORTATION

KEY PLAN:

SCALE: AS SHOWN | SHOP DRAWING | DATE: 08/29/2023

REV.	DATE	DSG.	CHK.	APP.	AMENDMENTS	STATUS
B	08/29/2023	M.KH	M.KH	DR.M.M	ISSUED FOR INFORMATION	IFI
A	09/21/2022	M.KH	M.KH	DR.M.M	ISSUED FOR INFORMATION	IFI

DRAWING TITLE
6TH OF OCTOBER MONORAIL
SERVICE WALKWAY
ZONE (1016)
PLAN AT EL+0.350

Project Code	Rubric	Initiator	Lot	Ref	Number	Revision
93	M047	6ACC	60DE	PDWG	1603	B

Tekla structures

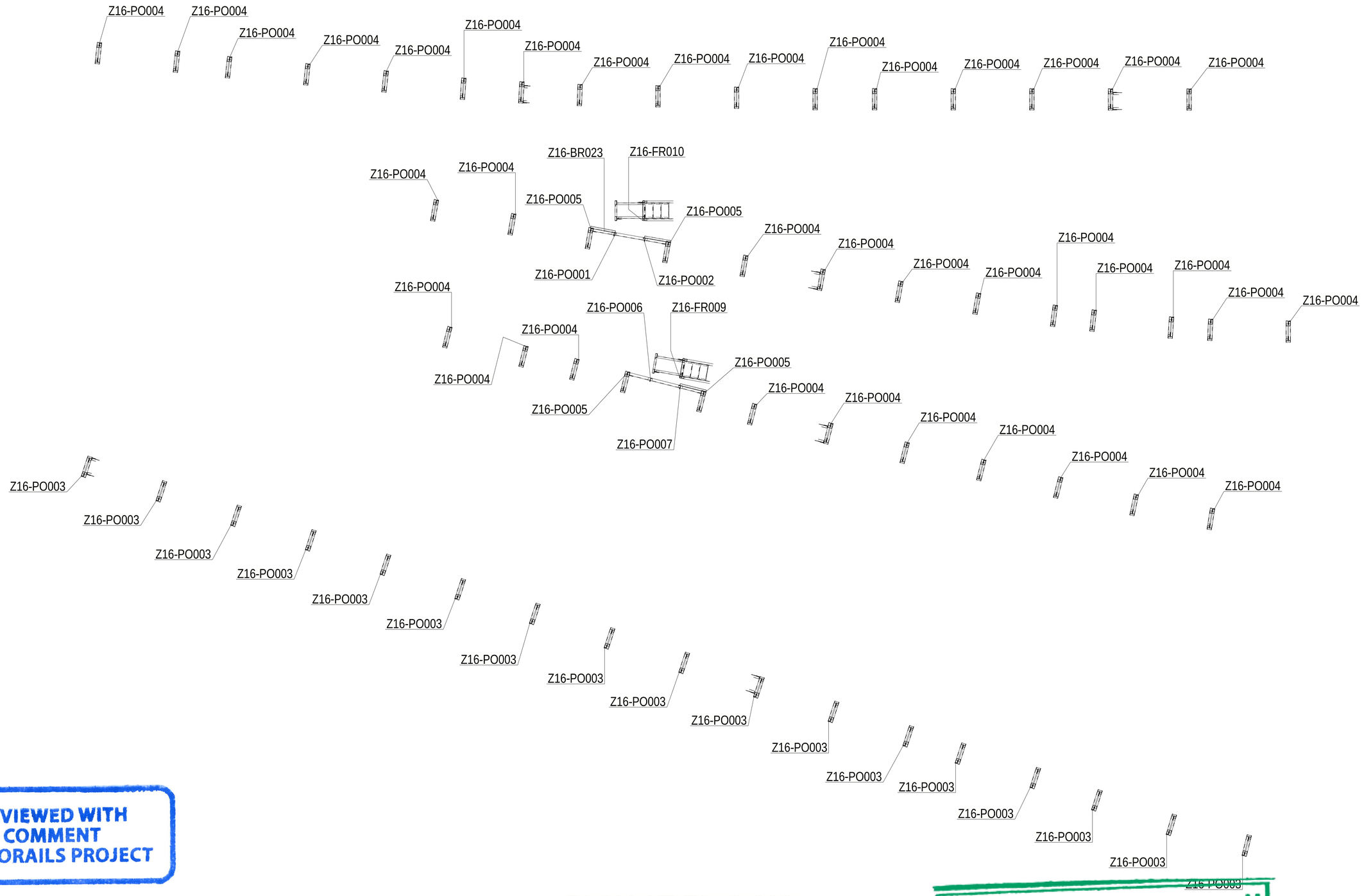

REVIEWED WITH COMMENT
MONORAILS PROJECT

Approval is subject to approval of coordination package between multi-discipline.

PLAN AT EL+0.200

6 October Monorail
Engineering Unit
Valid For Construction

GENERAL NOTES:

1. THE DIMENSIONS SHOWN ARE NOMINAL (IN MILLIMETERS), U.N.O.
2. WELD SIZESHALL BE AISC MINIMUM OF 6 mm UNLESS NOTED OTHERWISE.
3. ALL FIELD WELDS SHALL BE INSPECTED PER QUALITY ASSURANCE AND SPECIAL INSPECTIONS.

REFERENCE DRAWINGS

1	93M-BOA-NAT-LOT-04833
2	93M-BOA-NAT-LOT-09170
3	93M-BOA-NAT-LOT-01976
4	93M-BOA-NAT-LOT-20021
5	
6	
7	
8	
9	

6TH OF OCTOBER CITY RAIL TRANSIT MONORAIL

The Authority | Consultant: Hill International | Main Contractor: ORASCOM CONSTRUCTION, BOMBARDIER | Structural Designer: INNOVA TRANSPORTATION

KEY PLAN:

SCALE: AS SHOWN | SHOP DRAWING | DATE: 08/29/2023

REV	DATE	DSG.	CHK.	APP.	AMENDMENTS	STATUS
B	08/29/2023	M.KH	M.KH	DR.M.M	ISSUED FOR INFORMATION	IFI
A	09/21/2022	M.KH	M.KH	DR.M.M	ISSUED FOR INFORMATION	IFI

DRAWING TITLE
6TH OF OCTOBER MONORAIL
SERVICE WALKWAY
ZONE (1016)
PLAN AT EL+0.200

Project Code	Rubric	Initiator	Lot	Ref	Number	Revision
93	M047	6ACC	60DEP	DWG	1604	B

Trekla structures

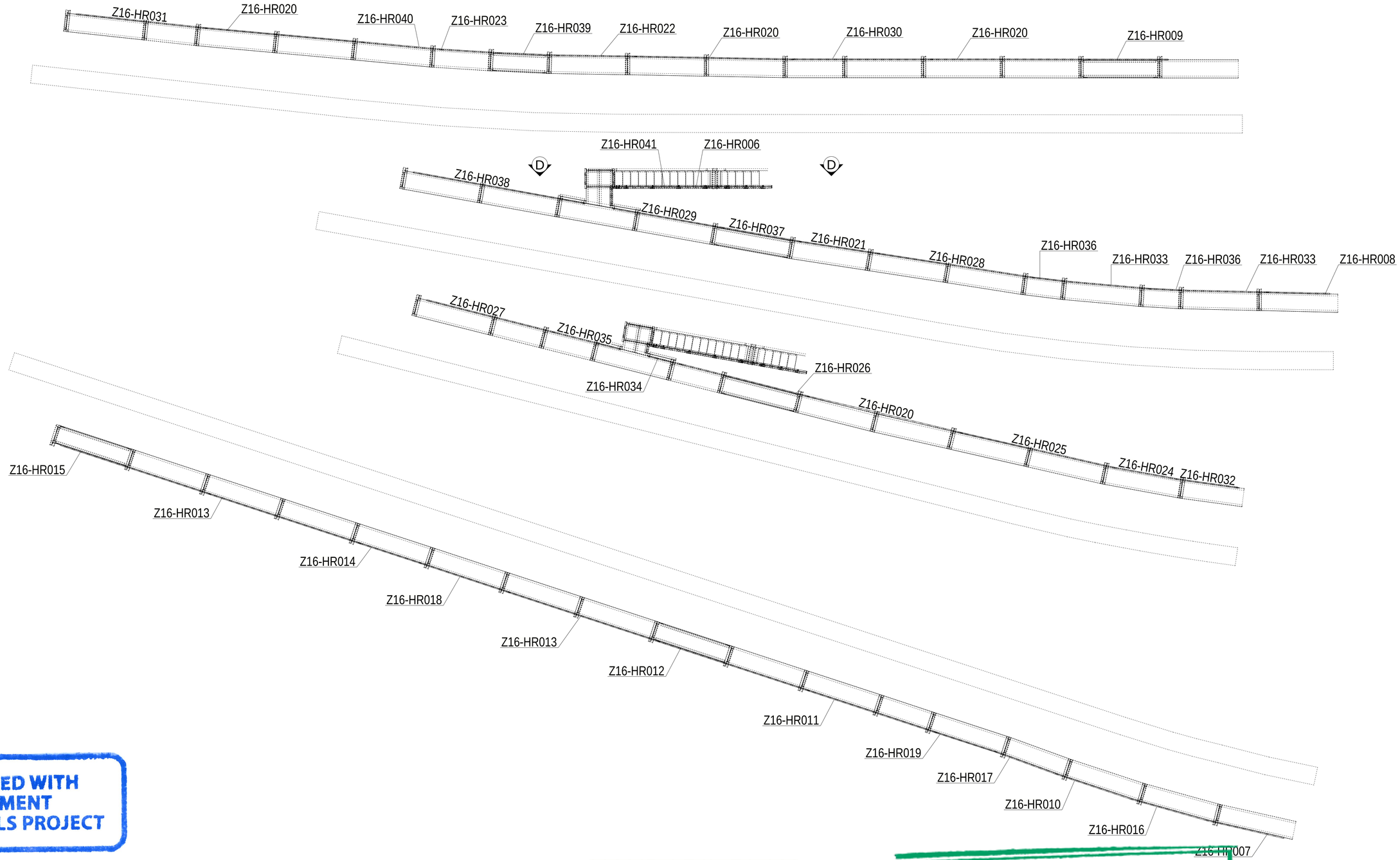

REVIEWED WITH COMMENT
MONORAILS PROJECT

Approval is subject to approval of coordination package between multi-discipline.

HANDARIL PLAN

6 October Monorail
Engineering Unit
Valid For Construction

GENERAL NOTES:

1. THE DIMENSIONS SHOWN ARE NOMINAL (IN MILLIMETERS), U.N.O.
2. WELD SIZESHALL BE AISC MINIMUM OF 6 mm UNLESS NOTED OTHERWISE.
3. ALL FIELD WELDS SHALL BE INSPECTED PER QUALITY ASSURANCE AND SPECIAL INSPECTIONS.

REFERENCE DRAWINGS

1	93M-BOA-NAT-LOT-04833
2	93M-BOA-NAT-LOT-09170
3	93M-BOA-NAT-LOT-01976
4	93M-BOA-NAT-LOT-20021
5	
6	
7	
8	
9	

6TH OF OCTOBER CITY RAIL TRANSIT MONORAIL

The Authority | Consultant: Hill International | Main Contractor: ORASCOM CONSTRUCTION, BOMBARDIER | Structural Designer: INNOVA TRANSPORTATION

KEY PLAN:

SCALE: AS SHOWN | SHOP DRAWING | DATE: 08/29/2023

REV	DATE	DSG.	CHK.	APP.	AMENDMENTS	STATUS
B	08/29/2023	M.KH	M.KH	DR.M.M	ISSUED FOR INFORMATION	IFI
A	09/21/2022	M.KH	M.KH	DR.M.M	ISSUED FOR INFORMATION	IFI

DRAWING TITLE
6TH OF OCTOBER MONORAIL SERVICE WALKWAY
ZONE (1016)
HANDRAIL PLAN

Project Code	Rubric	Initiator	Lot	Ref	Number	Revision
93	M047	6ACC	60DEP	DWG	1600	5	B

Tekla structures

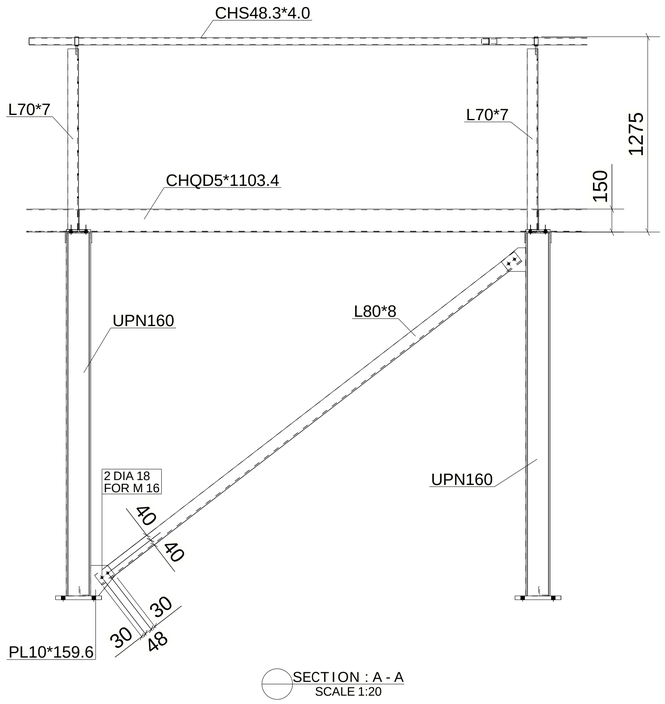

SECTION : A - A
SCALE 1:20

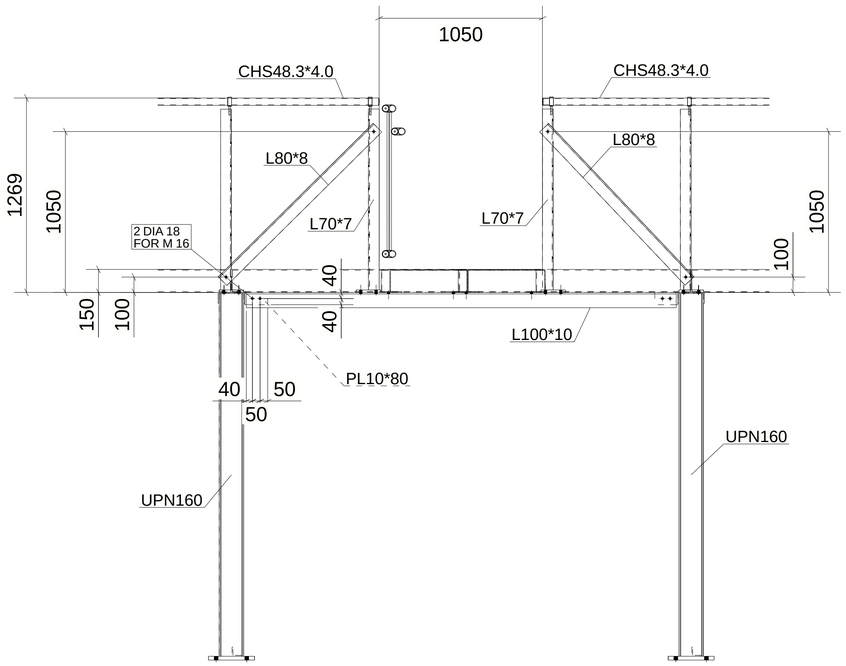

SECTION : C - C
SCALE 1:20

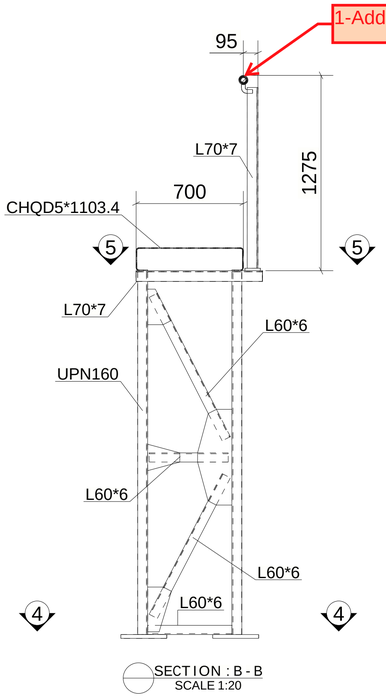

SECTION : B - B
SCALE 1:20

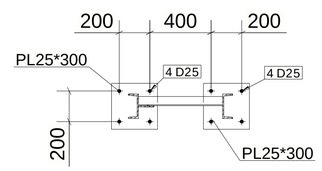

SECTION : 4 - 4
SCALE 1:20

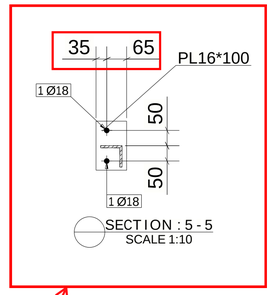

SECTION : 5 - 5
SCALE 1:10

2-Connection is not matching with the design drawings as shown below.

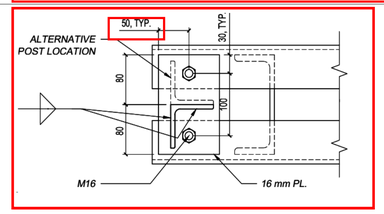

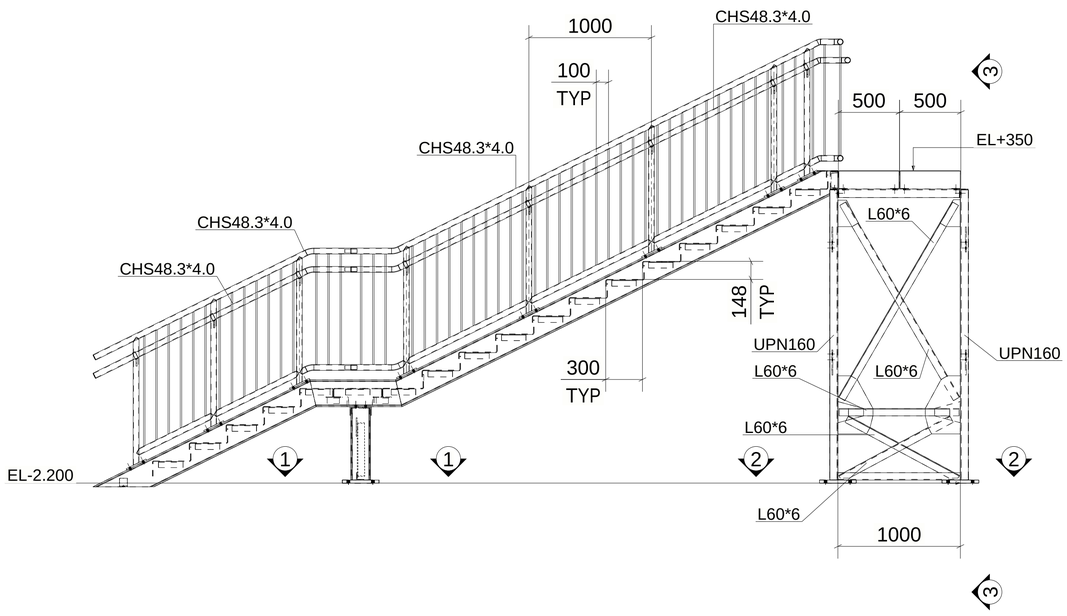

SECTION : D - D
SCALE 1:25

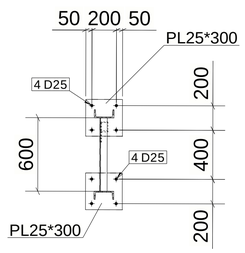

SECTION : 1 - 1
SCALE 1:25

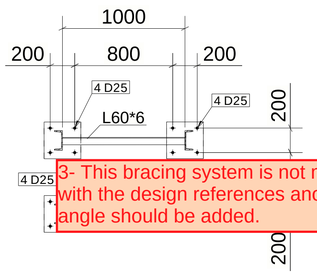

3- This bracing system is not matching with the design references another angle should be added.

SECTION : 2 - 2
SCALE 1:25

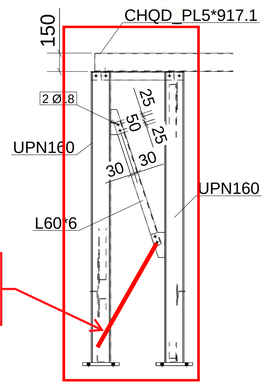

SECTION : 3 - 3
SCALE 1:25

6 October Monorail
Engineering Unit
Valid For Construction

REVIEWED WITH
COMMENT
MONORAILS PROJECT

GENERAL NOTES:

1. THE DIMENSIONS SHOWN ARE NOMINAL (IN MILLIMETERS), U.N.O.
2. WELD SIZESHALL BE AISC MINIMUM OF 6 mm UNLESS NOTED OTHERWISE.
3. ALL FIELD WELDS SHALL BE INSPECTED PER QUALITY ASSURANCE AND SPECIAL INSPECTIONS.

REFERENCE DRAWINGS

1	93M-BOA-NAT-LOT-04833
2	93M-BOA-NAT-LOT-09170
3	93M-BOA-NAT-LOT-01976
4	93M-BOA-NAT-LOT-20021
5	
6	
7	
8	
9	

6TH OF OCTOBER CITY RAIL TRANSIT MONORAIL

The Authority — Hill International (Consultant) — Main Contractor — Structural Designer

KEY PLAN:

SCALE: AS SHOWN | SHOP DRAWING | DATE: 08/29/2023

REV	DATE	DSG.	CHK.	APP.	AMENDMENTS	STATUS
B	08/29/2023	M.KH	M.KH	DR.M.M	ISSUED FOR INFORMATION	IFI
A	09/21/2022	M.KH	M.KH	DR.M.M	ISSUED FOR INFORMATION	IFI

DRAWING TITLE
6TH OF OCTOBER MONORAIL
SERVICE WALKWAY
ZONE (1016)
SECTIONS

Project Code	Rubric	Initiator	Lot	Ref	Number	Revision
93	M047	6ACC60	DEP	DWG	16006	B

Tekla structures

Approval is subject to approval of coordination package between multi-discipline.

REVIEWED WITH COMMENT
MONORAILS PROJECT

MATERIAL LIST FOR ASSEMBLY MK'DZ16-PO001

Mark	Profile	GRADE	No.	Length	Area	Weight
Z16-PO001	L70*7	S235JR	1	1181	0.33	8.63
W831	PIPE2SCH40	S235JR	1	25	0.01	0.14
W848	PL10*25	S355JR	1	98	0.01	0.19
W850	PL16*100	S355JR	1	160	0.04	2.01
				Total	0.39	10.96

BOLT LIST:-

BOLT \ STUD	BOLT DESCRIPTION	QTY	FINISH
BOLT	B1N2W16 X 60 A325M	2	

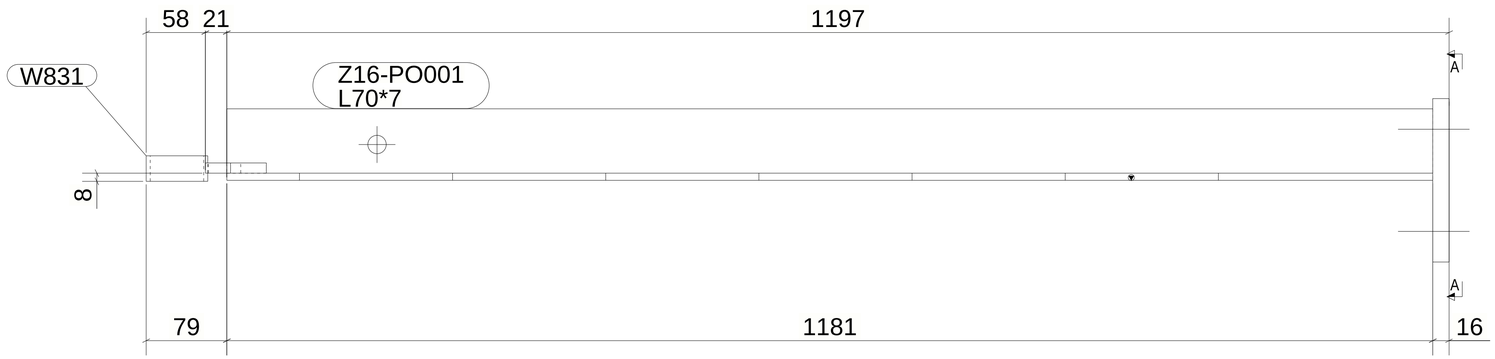

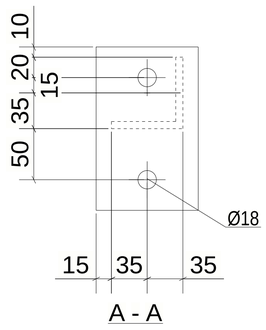

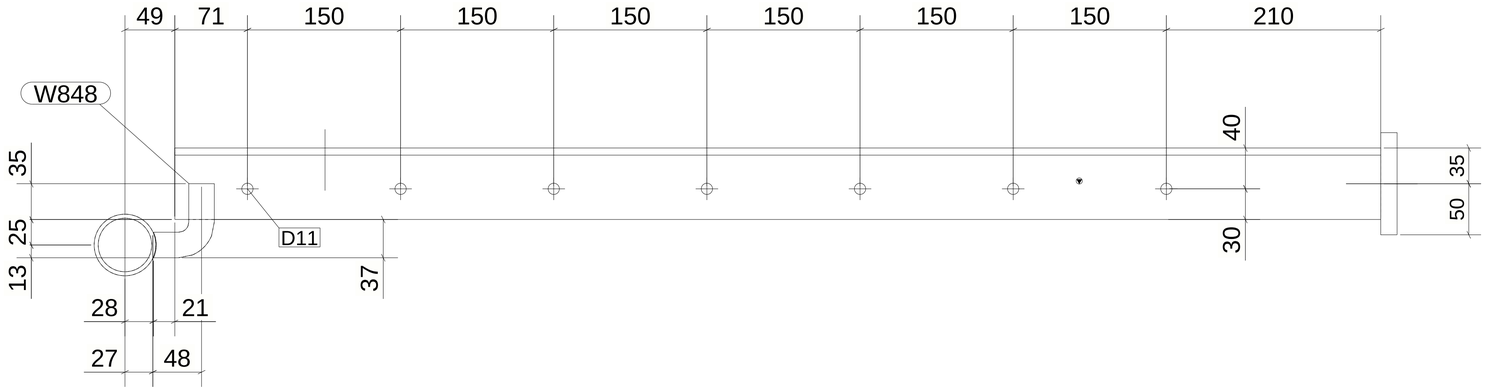

1 *REQUIRED AS DRAWN MARKED* Z16-PO001

6 October Monorail
Engineering Unit
Valid For Construction

GENERAL NOTES:

1. THE DIMENSIONS SHOWN ARE NOMINAL (IN MILLIMETERS), U.N.O.
2. WELD SIZESHALL BE AISC MINIMUM OF 6 mm UNLESS NOTED OTHERWISE.
3. ALL FIELD WELDS SHALL BE INSPECTED PER QUALITY ASSURANCE AND SPECIAL INSPECTIONS.

REFERENCE DRAWINGS

1	93M-BOA-NAT-LOT-04833
2	93M-BOA-NAT-LOT-09170
3	93M-BOA-NAT-LOT-01976
4	93M-BOA-NAT-LOT-20021
5	
6	
7	
8	
9	

6TH OF OCTOBER CITY RAIL TRANSIT MONORAIL

The Authority | Consultant: Hill International | Main Contractor: ORASCOM / BOMBARDIER | Structural Designer: INNOVA

KEY PLAN:

SCALE: AS SHOWN | SHOP DRAWING | DATE: 08/29/2023

REV	DATE	DSG.	CHK.	APP.	AMENDMENTS	STATUS
B	08/29/2023	M.KH	M.KH	DR.M.M	ISSUED FOR INFORMATION	IFI
A	09/21/2022	M.KH	M.KH	DR.M.M	ISSUED FOR INFORMATION	IFI

DRAWING TITLE
6TH OF OCTOBER MONORAIL
SERVICE WALKWAYS
ZONE(1016)
Z16-PO001

Project Code	Rubric	Initiator	Lot	Ref	Number	Revision
93	M047	6ACC	60DEP	DWG	16007	B

Tekla structures

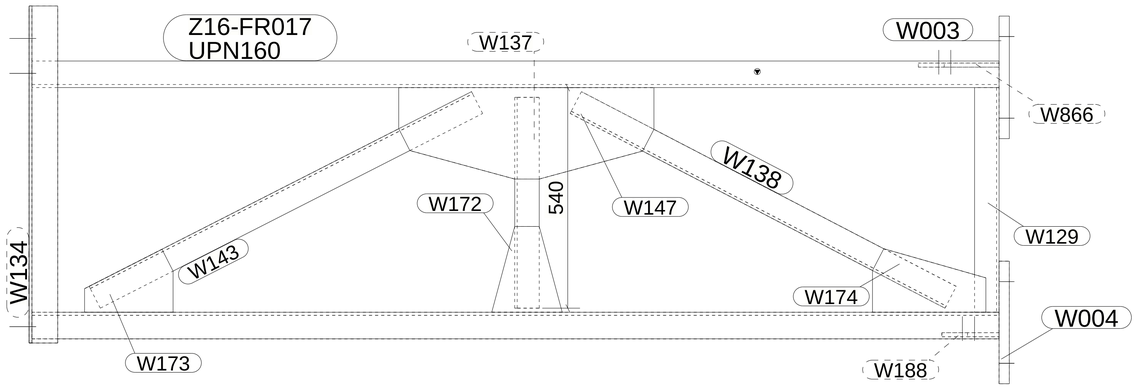

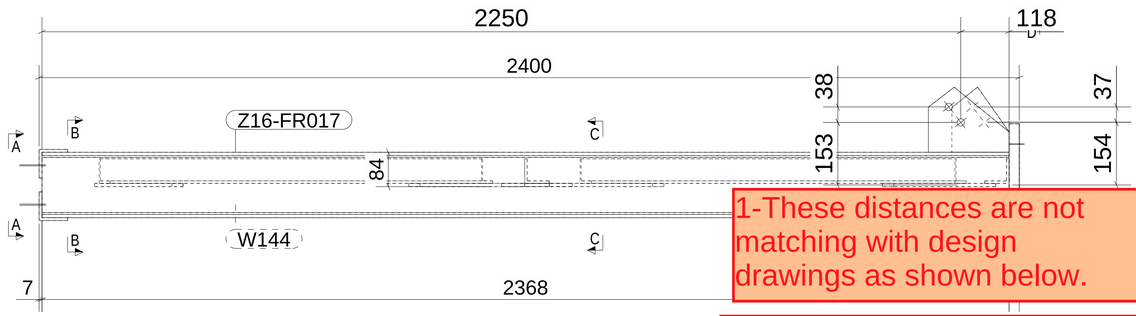

1-These distances are not matching with design drawings as shown below.

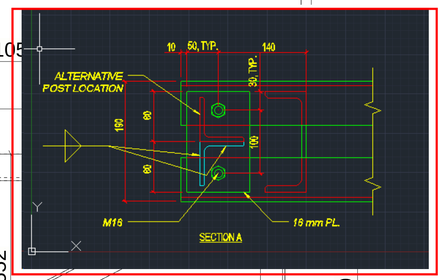

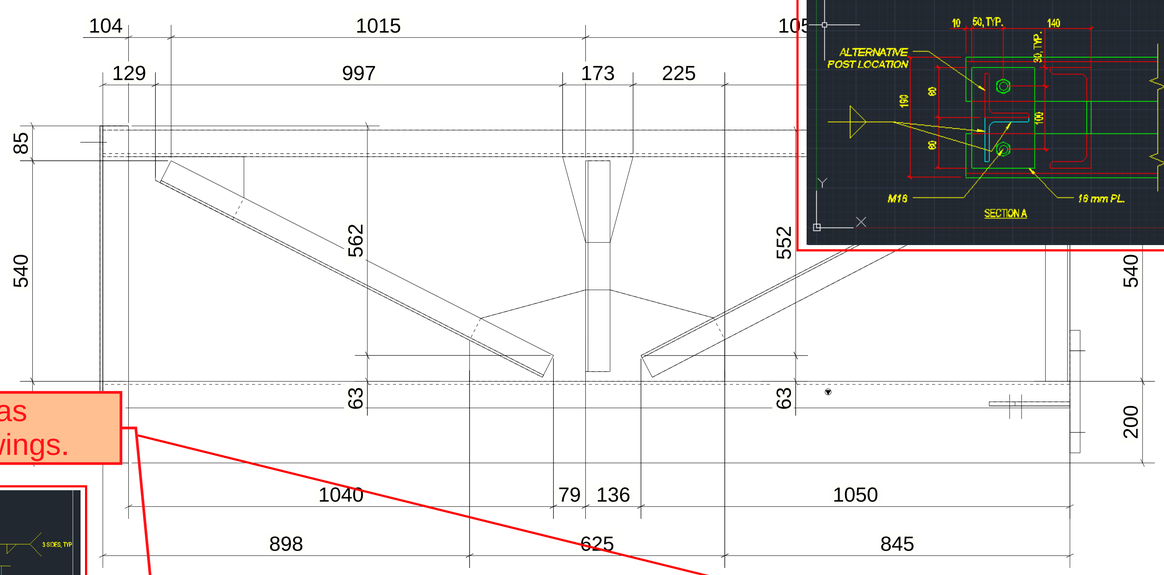

A - A

2-Should be 103mm as shown in design drawings.

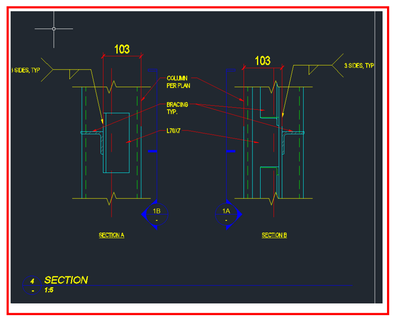

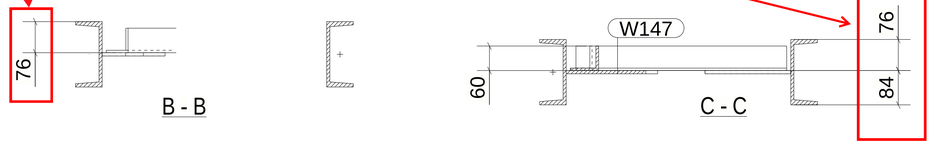

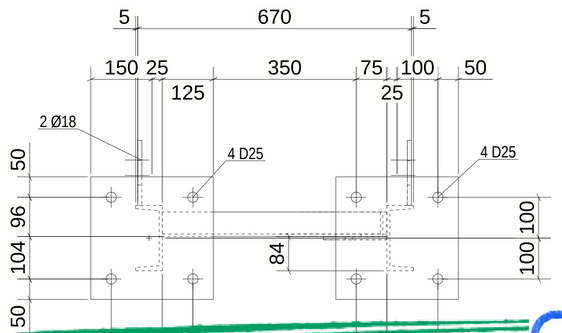

D - D

1 *REQUIRED AS DRAWN MARKED* Z16-FR017

MATERIAL LIST FOR ASSEMBLY MK'D Z16-FR017

Mark	Profile	GRADE	No.	Length	Area	Weight
Z16-FR017	UPN160	S235JR	1	2368	1.30	44.61
W003	PL25*300	S355JR	1	300	0.21	17.66
W004	PL25*300	S355JR	1	300	0.21	17.66
W129	L60*6	S235JR	1	550	0.13	2.95
W134	L70*7	S235JR	1	825	0.23	6.03
W137	L60*6	S235JR	1	516	0.13	2.77
W138	L60*6	S235JR	1	1034	0.25	5.55
W143	L60*6	S235JR	1	1051	0.25	5.64
W144	UPN160	S235JR	1	2368	1.30	44.61
W146	L70*7	S235JR	1	825	0.23	6.03
W147	PL8*223.9	S355JR	1	625	0.25	7.35
W172	PL8*166.7	S355JR	1	233	0.05	1.53
W173	PL8*154.2	S355JR	1	217	0.05	1.48
W174	PL8*155.4	S355JR	1	278	0.07	2.10
W188	PL10*140.1	S355JR	1	160	0.04	1.30
W866	PL10*159.4	S355JR	1	198	0.05	1.77
				Total	4.77	169.07

BOLT LIST:-

BOLT \ STUD	BOLT DESCRIPTION	QTY	FINISH

6 October Monorail
Engineering Unit

REVIEWED WITH COMMENT
MONORAILS PROJECT

Valid For Construction

GENERAL NOTES:

1. THE DIMENSIONS SHOWN ARE NOMINAL (IN MILLIMETERS), U.N.O.
2. WELD SIZESHALL BE AISC MINIMUM OF 6 mm UNLESS NOTED OTHERWISE.
3. ALL FIELD WELDS SHALL BE INSPECTED PER QUALITY ASSURANCE AND SPECIAL INSPECTIONS.

REFERENCE DRAWINGS

1	93M-BOA-NAT-LOT-04833
2	93M-BOA-NAT-LOT-09170
3	93M-BOA-NAT-LOT-01976
4	93M-BOA-NAT-LOT-20021
5	
6	
7	
8	
9	

6TH OF OCTOBER CITY RAIL TRANSIT MONORAIL

The Authority | Consultant: Hill International | Main Contractor: ORASCOM CONSTRUCTION / BOMBARDIER | Structural Designer: INNOVA TRANSPORTATION

KEY PLAN:

SCALE: AS SHOWN | SHOP DRAWING | DATE: 08/29/2023

REV	DATE	DSG.	CHK.	APP.	AMENDMENTS	STATUS
B	08/29/2023	M.KH	M.KH	DR.M.M	ISSUED FOR INFORMATION	IFI
A	09/21/2022	M.KH	M.KH	DR.M.M	ISSUED FOR INFORMATION	IFI

DRAWING TITLE
6TH OF OCTOBER MONORAIL
SERVICE WALKWAYS
ZONE(1016)
Z16-FR017

Project Code	Rubric	Initiator	Lot	Ref	Number	Revision
93M	047	6ACC	60DE	PDWG	1600	8 B

Tekla structures

Same comments as 93M-0476-ACC-60DEP-DWG-16008-B.

REVIEWED WITH COMMENT MONORAILS PROJECT

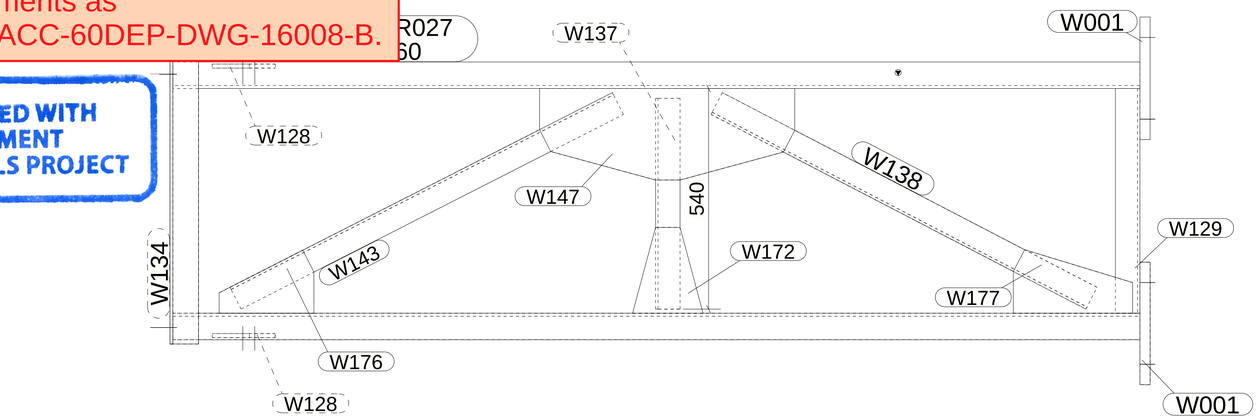

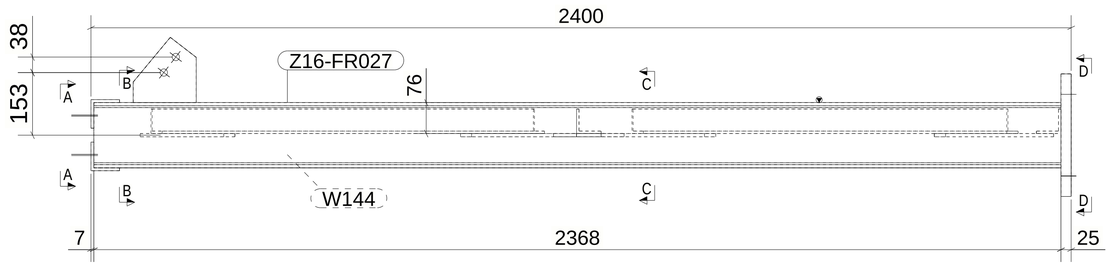

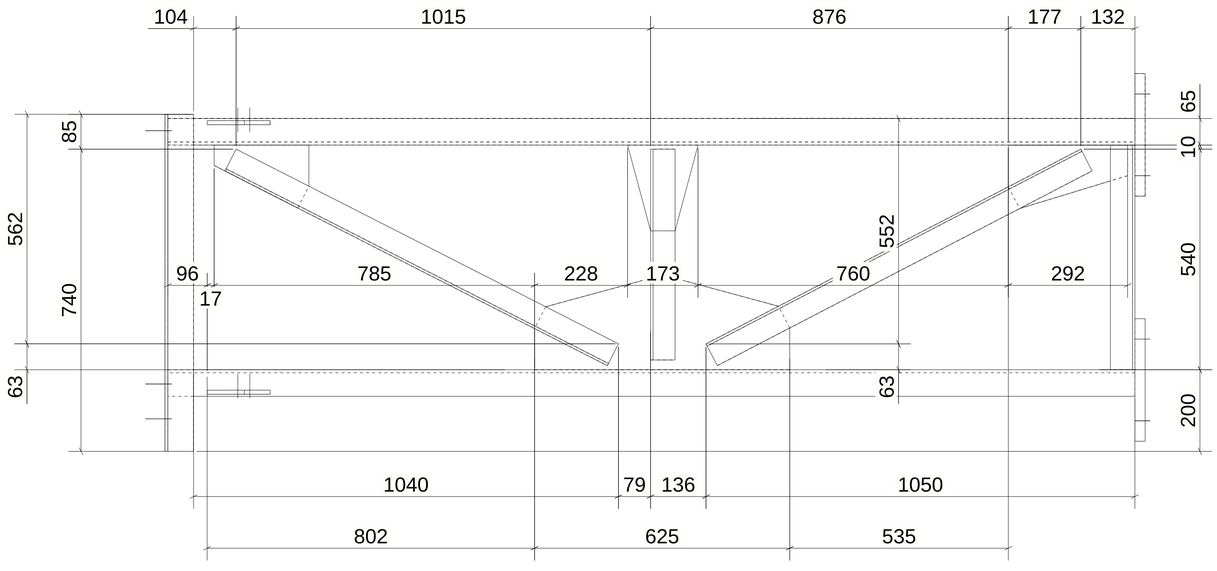

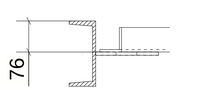

B - B

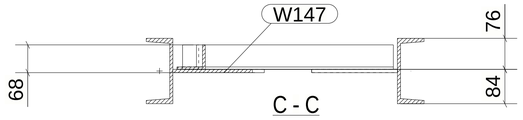

C - C

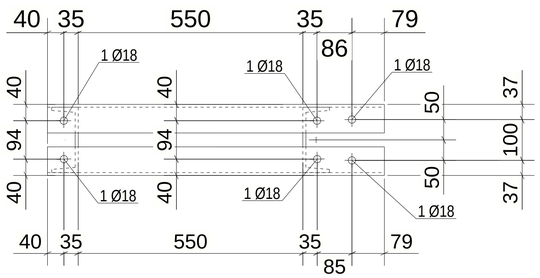

A - A

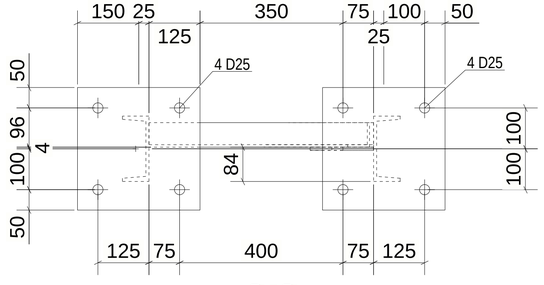

D - D

MATERIAL LIST FOR ASSEMBLY MK'D Z16-FR027

Mark	Profile	GRADE	No.	Length	Area	Weight
Z16-FR027	UPN160	S235JR	1	2368	1.30	44.61
W001	PL25*300	S355JR	2	300	0.21	17.66
W128	PL10*154.1	S355JR	2	159	0.04	1.42
W129	L60*6	S235JR	1	550	0.13	2.95
W134	L70*7	S235JR	1	825	0.23	6.03
W137	L60*6	S235JR	1	516	0.13	2.77
W138	L60*6	S235JR	1	1034	0.25	5.55
W143	L60*6	S235JR	1	1051	0.25	5.64
W144	UPN160	S235JR	1	2368	1.30	44.61
W146	L70*7	S235JR	1	825	0.23	6.03
W147	PL8*223.9	S355JR	1	625	0.25	7.35
W172	PL8*166.7	S355JR	1	233	0.05	1.53
W176	PL8*154.2	S355JR	1	232	0.05	1.53
W177	PL8*155.4	S355JR	1	292	0.07	2.14
				Total	4.76	168.92

BOLT LIST:-

BOLT \ STUD	BOLT DESCRIPTION	QTY	FINISH

2 *REQUIRED AS DRAWN MARKED* Z16-FR027

GENERAL NOTES:

1. THE DIMENSIONS SHOWN ARE NOMINAL (IN MILLIMETERS), U.N.O.
2. WELD SIZESHALL BE AISC MINIMUM OF 6 mm UNLESS NOTED OTHERWISE.
3. ALL FIELD WELDS SHALL BE INSPECTED PER QUALITY ASSURANCE AND SPECIAL INSPECTIONS.

REFERENCE DRAWINGS

1	93M-BOA-NAT-LOT-04833
2	93M-BOA-NAT-LOT-09170
3	93M-BOA-NAT-LOT-01976
4	93M-BOA-NAT-LOT-20021
5	
6	
7	
8	
9	

6TH OF OCTOBER CITY RAIL TRANSIT MONORAIL

The Authority — Hill International Consultant — Main Contractor — Structural Designer

6 October Monorail Engineering Unit Valid For Construction

KEY PLAN:

SCALE: AS SHOWN | SHOPDRAWING | DATE: 08/29/2023

REV	DATE	DSG.	CHK.	APP.	AMENDMENTS	STATUS
B	08/29/2023	M.KH	M.KH	DR.M.M	ISSUED FOR INFORMATION	IFI
A	09/21/2022	M.KH	M.KH	DR.M.M	ISSUED FOR INFORMATION	IFI

DRAWING TITLE
6TH OF OCTOBER MONORAIL
SERVICE WALKWAYS
ZONE(1016)
Z16-FR027

Project Code	Rubric	Initiator	Lot	Ref	Number	Revision
93	M047	6ACC	60DEP	DWG	16009	B

Tekla structures

Approval is subject to approval of coordination package between multi-discipline.

REVIEWED WITH COMMENT
MONORAILS PROJECT

MATERIAL LIST FOR ASSEMBLY MK'DZ16-PO006

Mark	Profile	GRADE	No.	Length	Area	Weight
Z16-PO006	L70*7	S235JR	1	1181	0.33	8.63
W831	PIPE2SCH40	S235JR	1	25	0.01	0.14
W848	PL10*25	S355JR	1	98	0.01	0.19
W850	PL16*100	S355JR	1	160	0.04	2.01
				Total	0.39	10.96

BOLT LIST:-

BOLT \ STUD	BOLT DESCRIPTION	QTY	FINISH
BOLT	B1N2W 16 X 60 A325M	2	

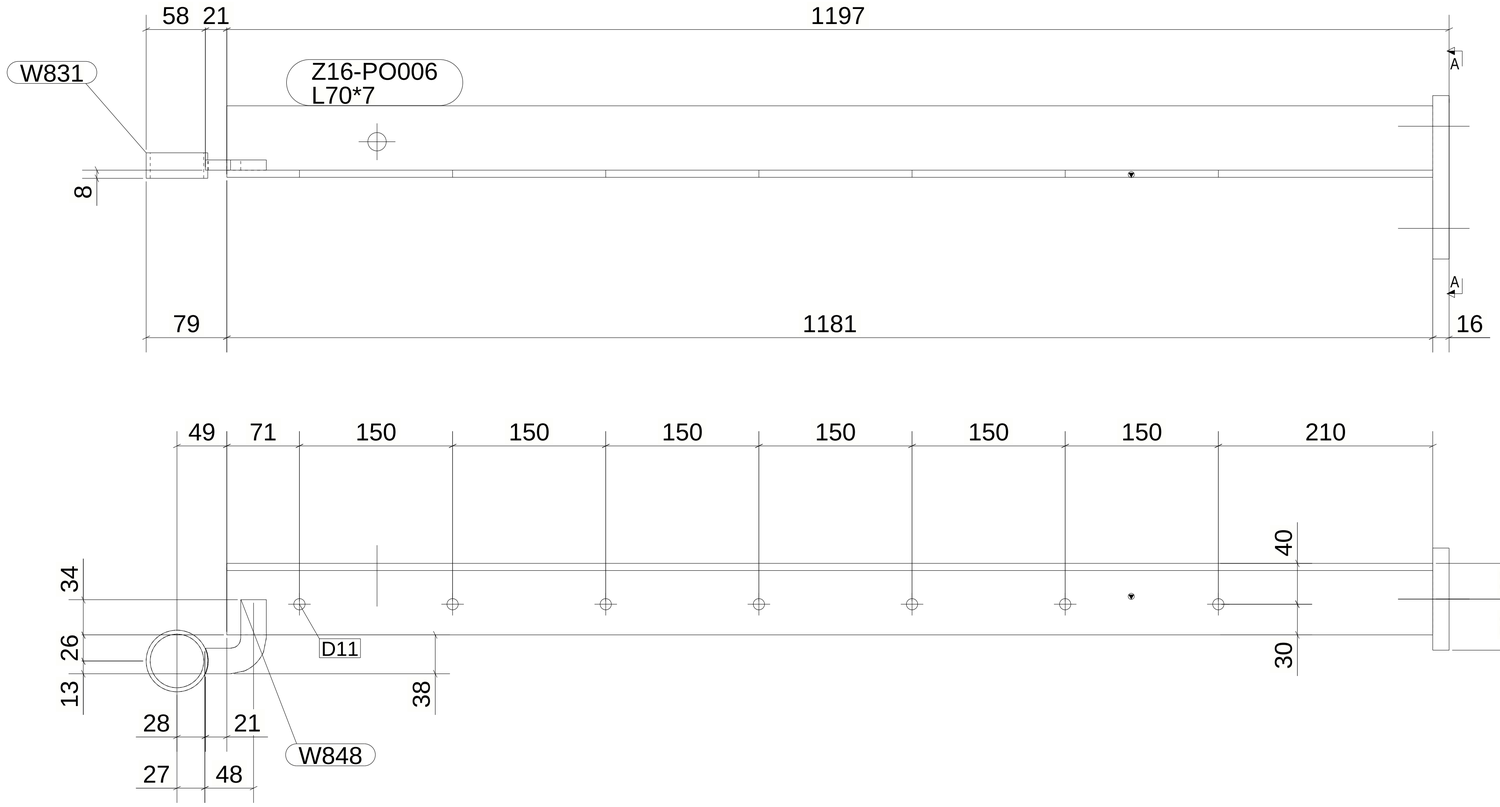

1 *REQUIRED AS DRAWN MARKED* Z16-PO006

6 October Monorail
Engineering Unit
Valid For Construction

GENERAL NOTES:

1. THE DIMENSIONS SHOWN ARE NOMINAL (IN MILLIMETERS), U.N.O.
2. WELD SIZESHALL BE AISC MINIMUM OF 6 mm UNLESS NOTED OTHERWISE.
3. ALL FIELD WELDS SHALL BE INSPECTED PER QUALITY ASSURANCE AND SPECIAL INSPECTIONS.

REFERENCE DRAWINGS

1	93M-BOA-NAT-LOT-04833
2	93M-BOA-NAT-LOT-09170
3	93M-BOA-NAT-LOT-01976
4	93M-BOA-NAT-LOT-20021
5	
6	
7	
8	
9	

6TH OF OCTOBER CITY RAIL TRANSIT MONORAIL

The Authority — Consultant — Main Contractor — Structural Designer

KEY PLAN:

SCALE: AS SHOWN | SHOP DRAWING | DATE: 08/29/2023

REV	DATE	DSG.	CHK.	APP.	AMENDMENTS	STATUS
B	08/29/2023	M.KH	M.KH	DR.M.M	ISSUED FOR INFORMATION	IFI
A	09/21/2022	M.KH	M.KH	DR.M.M	ISSUED FOR INFORMATION	IFI

DRAWING TITLE
6TH OF OCTOBER MONORAIL
SERVICE WALKWAYS
ZONE(1016)
Z16-PO006

Project Code	Rubric	Initiator	Lot	Ref	Number	Revision
93M	047	6ACC	60DE	PDWG	16010	B

Tekla structures

Same comments as
93M-0476-ACC-60DEP-DWG-16008-B.

REVIEWED WITH COMMENT
MONORAILS PROJECT

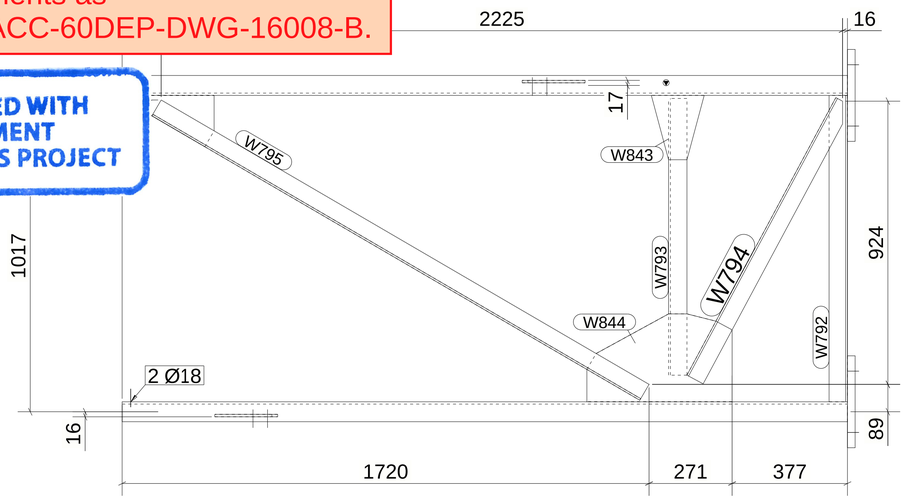

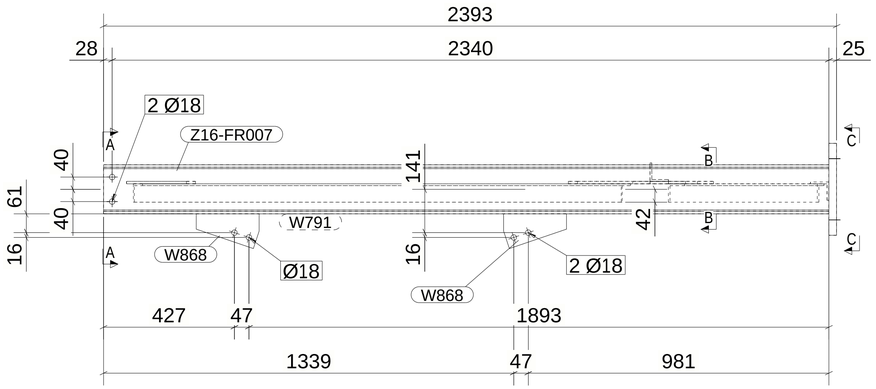

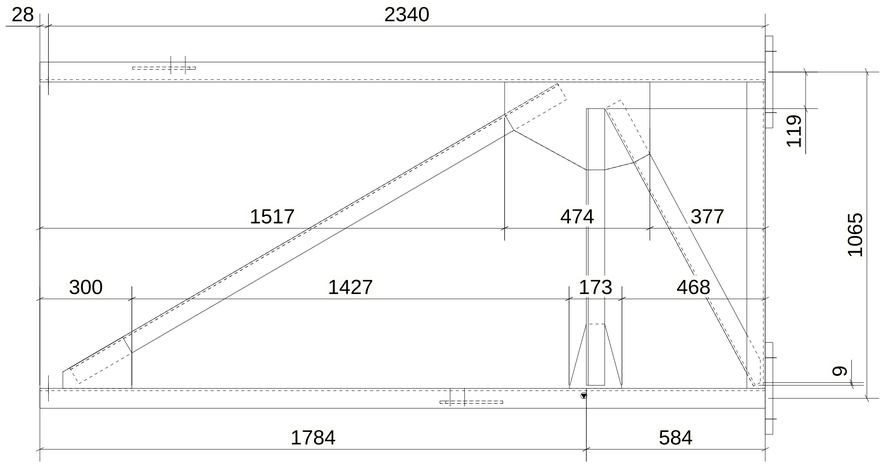

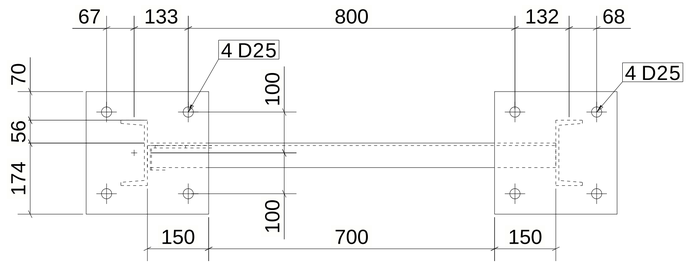

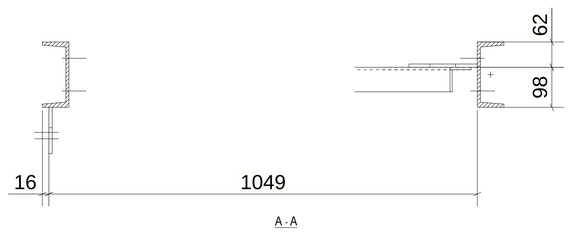

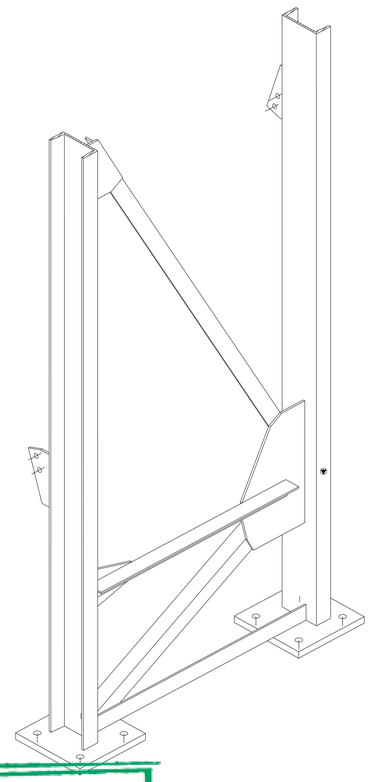

MATERIAL LIST FOR ASSEMBLY MK'D Z16-FR007

Mark	Profile	GRADE	No.	Length	Area	Weight
Z16-FR007	UPN160	S235JR	1	2368	1.30	44.61
W791	UPN160	S235JR	1	2368	1.30	44.61
W792	L60*6	S235JR	1	1000	0.24	5.37
W793	L60*6	S235JR	1	903	0.22	4.85
W794	L60*6	S235JR	1	1028	0.25	5.47
W795	L60*6	S235JR	1	1844	0.44	9.90
W842	PL8*159.9	S355JR	1	253	0.06	1.62
W843	PL8*166.7	S355JR	1	233	0.05	1.53
W844	PL8*286.9	S355JR	1	474	0.24	7.09
W868	PL8*113.4	S355JR	2	205	0.04	1.06
W869	PL25*300	S355JR	2	300	0.21	17.66
				Total	4.60	162.50

BOLT LIST:-

BOLT \ STUD	BOLT DESCRIPTION		QTY	FINISH
BOLT	B1N2W 16 X 50	A325M	4	

1 *REQUIRED AS DRAWN MARKED* Z16-FR007

GENERAL NOTES:

1. THE DIMENSIONS SHOWN ARE NOMINAL (IN MILLIMETERS), U.N.O.
2. WELD SIZESHALL BE AISC MINIMUM OF 6 mm UNLESS NOTED OTHERWISE.
3. ALL FIELD WELDS SHALL BE INSPECTED PER QUALITY ASSURANCE AND SPECIAL INSPECTIONS.

REFERENCE DRAWINGS

1	93M-BOA-NAT-LOT-04833
2	93M-BOA-NAT-LOT-09170
3	93M-BOA-NAT-LOT-01976
4	93M-BOA-NAT-LOT-20021
5	
6	
7	
8	
9	

6TH OF OCTOBER CITY RAIL TRANSIT MONORAIL

The Authority — Hill International Consultant — Main Contractor — Structural Designer

KEY PLAN:

6 October Monorail
Engineering Unit
Valid For Construction

SCALE: AS SHOWN | SHOP DRAWING | DATE: 08/29/2023

REV	DATE	DSG.	CHK.	APP.	AMENDMENTS	STATUS
B	08/29/2023	M.KH	M.KH	DR.M.M	ISSUED FOR INFORMATION	IFI
A	09/21/2022	M.KH	M.KH	DR.M.M	ISSUED FOR INFORMATION	IFI

DRAWING TITLE
6TH OF OCTOBER MONORAIL
SERVICE WALKWAYS
ZONE(1016)
Z16-FR007

Project Code	Rubric	Initiator	Lot	Ref	Number	Revision
93M	047	6ACC	60DEP	DWG	16011	B

Tekla structures

Same comments as
93M-0476-ACC-60DEP-DWG-16008-B.

REVIEWED WITH COMMENT
MONORAILS PROJECT

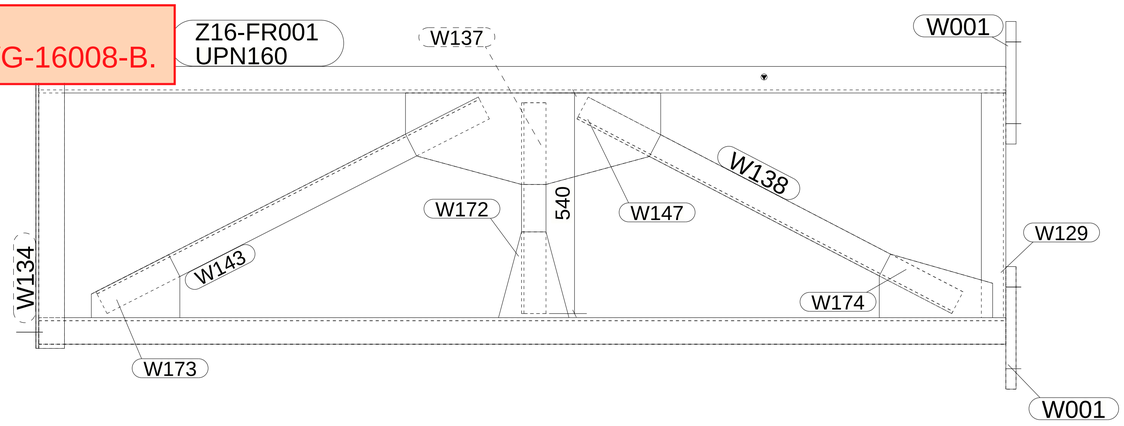

MATERIAL LIST FOR ASSEMBLY MK'D Z16-FR001

Mark	Profile	GRADE	No.	Length	Area	Weight
Z16-FR001	UPN160	S235JR	1	2368	1.30	44.61
W001	PL25*300	S355JR	2	300	0.21	17.66
W129	L60*6	S235JR	1	550	0.13	2.95
W134	L70*7	S235JR	1	825	0.23	6.03
W137	L60*6	S235JR	1	516	0.13	2.77
W138	L60*6	S235JR	1	1034	0.25	5.55
W143	L60*6	S235JR	1	1051	0.25	5.64
W144	UPN160	S235JR	1	2368	1.30	44.61
W146	L70*7	S235JR	1	825	0.23	6.03
W147	PL8*223.9	S355JR	1	625	0.25	7.35
W172	PL8*166.7	S355JR	1	233	0.05	1.53
W173	PL8*154.2	S355JR	1	217	0.05	1.48
W174	PL8*155.4	S355JR	1	278	0.07	2.10
				Total	4.68	166.00

BOLT LIST:-

BOLT \ STUD	BOLT DESCRIPTION	QTY	FINISH

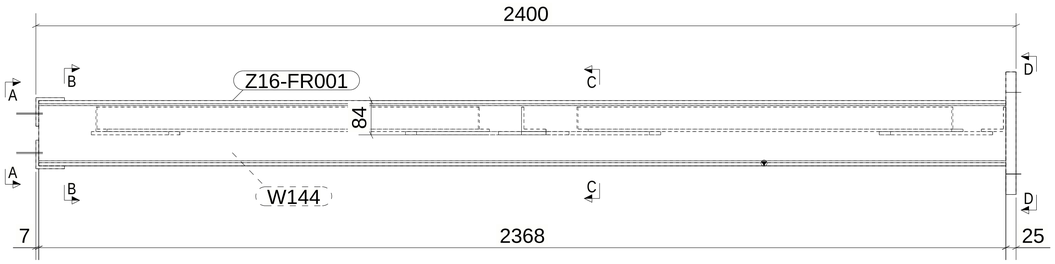

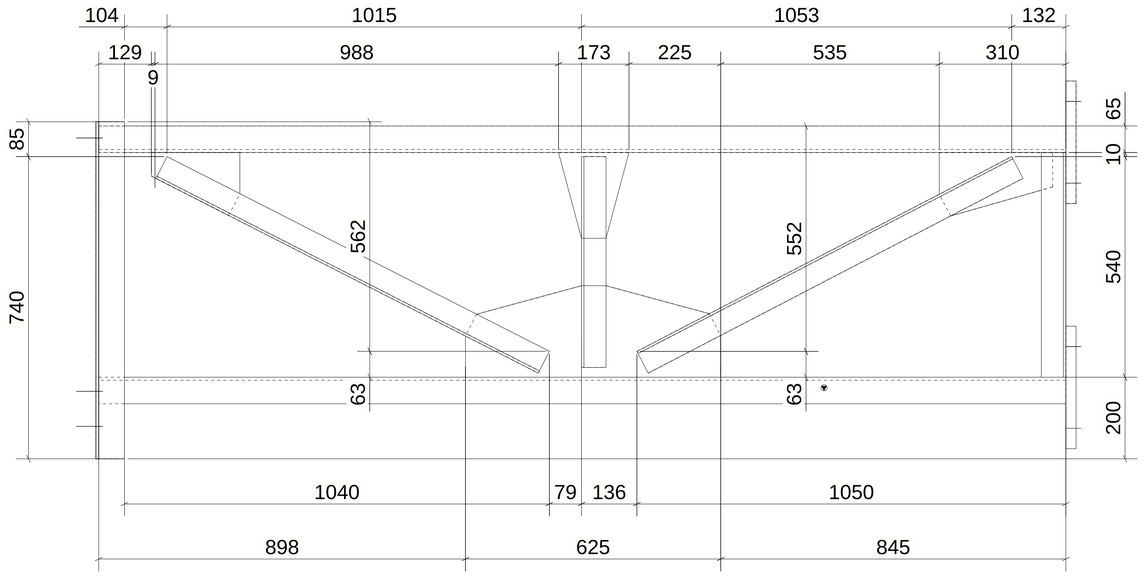

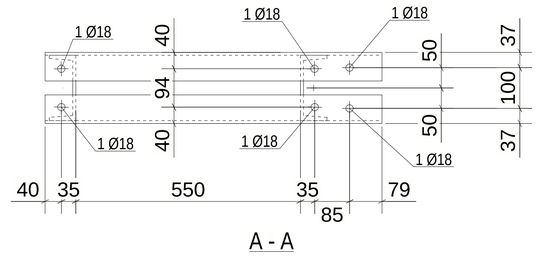

A - A

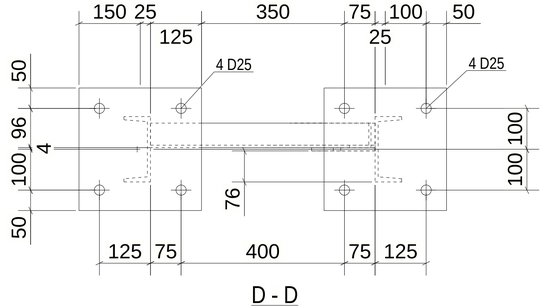

D - D

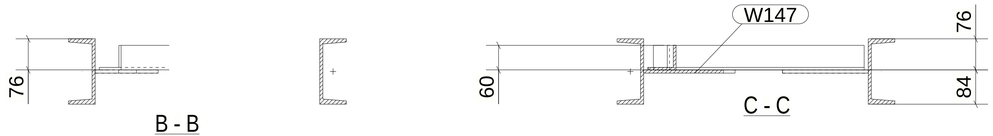

B - B C - C

13 *REQUIRED AS DRAWN MARKED* Z16-FR001

6 October Monorail
Engineering Unit
Valid For Construction

GENERAL NOTES:

1. THE DIMENSIONS SHOWN ARE NOMINAL (IN MILLIMETERS), U.N.O.
2. WELD SIZESHALL BE AISC MINIMUM OF 6 mm UNLESS NOTED OTHERWISE.
3. ALL FIELD WELDS SHALL BE INSPECTED PER QUALITY ASSURANCE AND SPECIAL INSPECTIONS.

REFERENCE DRAWINGS

1	93M-BOA-NAT-LOT-04833
2	93M-BOA-NAT-LOT-09170
3	93M-BOA-NAT-LOT-01976
4	93M-BOA-NAT-LOT-20021
5	
6	
7	
8	
9	

6TH OF OCTOBER CITY RAIL TRANSIT MONORAIL

The Authority — Hill International Consultant — Main Contractor — Structural Designer

KEY PLAN:

SCALE: AS SHOWN | SHOPDRAWING | DATE: 08/29/2023

REV	DATE	DSG.	CHK.	APP.	AMENDMENTS	STATUS
B	08/29/2023	M.KH	M.KH	DR.M.M	ISSUED FOR INFORMATION	IFI
A	09/21/2022	M.KH	M.KH	DR.M.M	ISSUED FOR INFORMATION	IFI

DRAWING TITLE
6TH OF OCTOBER MONORAIL
SERVICE WALKWAYS
ZONE(1016)
Z16-FR001

Project Code	Rubric	Initiator	Lot	Ref	Number	Revision
93M	047	6ACC	60DEP	DWG	16012	B

Tekla structures

REVIEWED WITH COMMENT
MONORAILS PROJECT

MATERIAL LIST FOR ASSEMBLY MK'D Z16-PO004

Mark	Profile	GRADE	No.	Length	Area	Weight
Z16-PO004	L70*7	S235JR	1	1180	0.33	8.62
W271	PL16*100	S355JR	1	160	0.04	2.01
W445	PL10*25	S355JR	1	98	0.01	0.19
W460	PIPE2SCH40	S235JR	1	25	0.01	0.14
				Total	0.39	10.96

BOLT LIST:-

BOLT \ STUD	BOLT DESCRIPTION		QTY	FINISH
BOLT	B1N2W16 X 55	A325M	2	

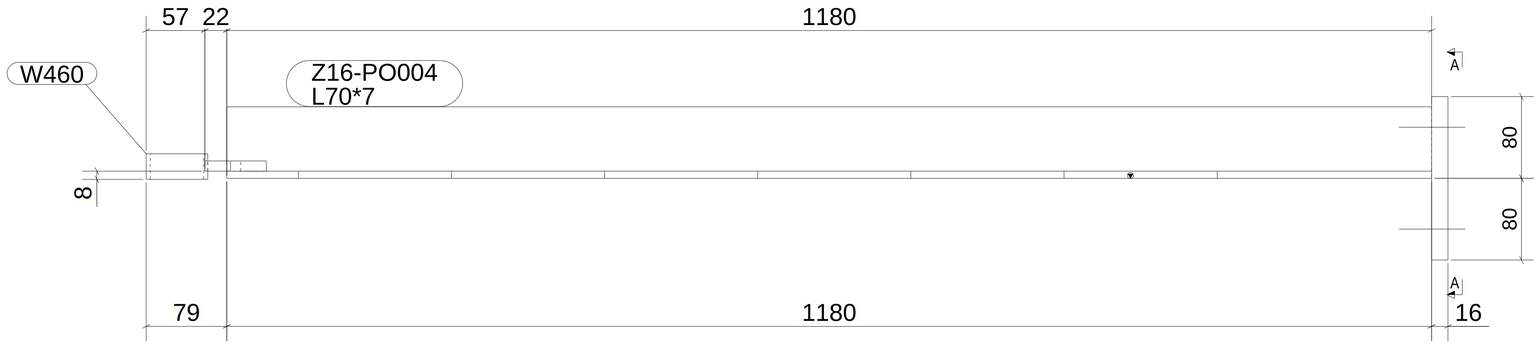

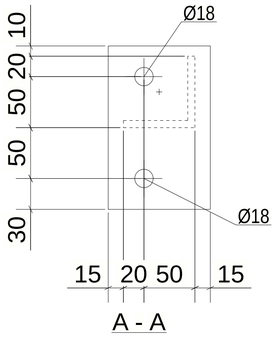

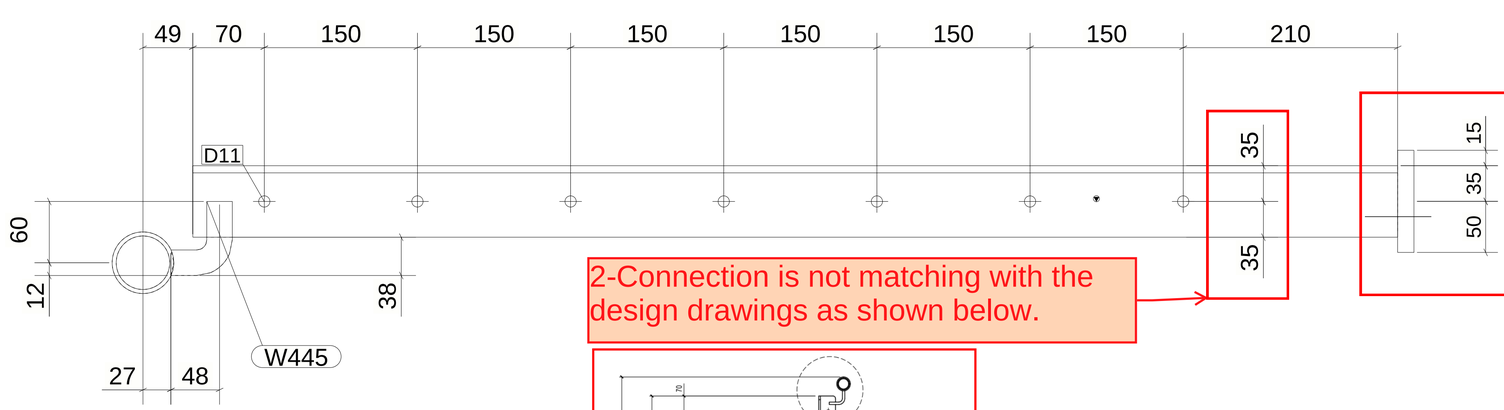

1-Connection is not matching with the design drawings as shown below.

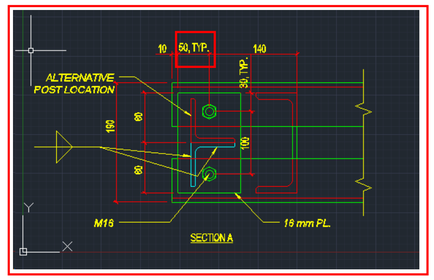

2-Connection is not matching with the design drawings as shown below.

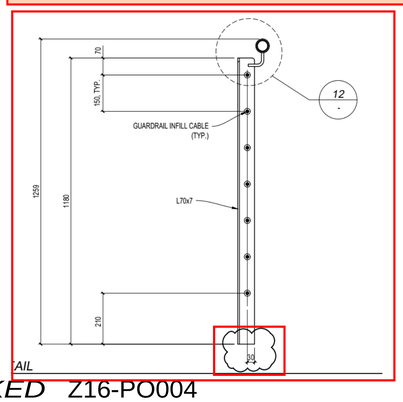

37 *REQUIRED AS DRAWN MARKED* Z16-PO004

6 October Monorail
Engineering Unit
Valid For Construction

GENERAL NOTES:

1. THE DIMENSIONS SHOWN ARE NOMINAL (IN MILLIMETERS), U.N.O.
2. WELD SIZESHALL BE AISC MINIMUM OF 6 mm UNLESS NOTED OTHERWISE.
3. ALL FIELD WELDS SHALL BE INSPECTED PER QUALITY ASSURANCE AND SPECIAL INSPECTIONS.

REFERENCE DRAWINGS

1	93M-BOA-NAT-LOT-04833
2	93M-BOA-NAT-LOT-09170
3	93M-BOA-NAT-LOT-01976
4	93M-BOA-NAT-LOT-20021
5	
6	
7	
8	
9	

6TH OF OCTOBER CITY RAIL TRANSIT MONORAIL

The Authority | Consultant: Hill International | Main Contractor: ORASCOM CONSTRUCTION, Six Construct, BOMBARDIER | Structural Designer: INNOVA TRANSPORTATION

KEY PLAN:

SCALE: AS SHOWN | SHOP DRAWING | DATE: 08/29/2023

REV	DATE	DSG.	CHK.	APP.	AMENDMENTS	STATUS
B	08/29/2023	M.KH	M.KH	DR.M.M	ISSUED FOR INFORMATION	IFI
A	09/21/2022	M.KH	M.KH	DR.M.M	ISSUED FOR INFORMATION	IFI

DRAWING TITLE
6TH OF OCTOBER MONORAIL
SERVICE WALKWAYS
ZONE(1016)
Z16-PO004

Project Code	Rubric	Initiator	Lot	Ref	Number	Revision
9 3 M	0 4 7 6	A C C	6 0 D E P	D W G	1 6 0 1 3	B

Tekla structures

Approval is subject to approval of coordination package between multi-discipline.

REVIEWED WITH COMMENT
MONORAILS PROJECT

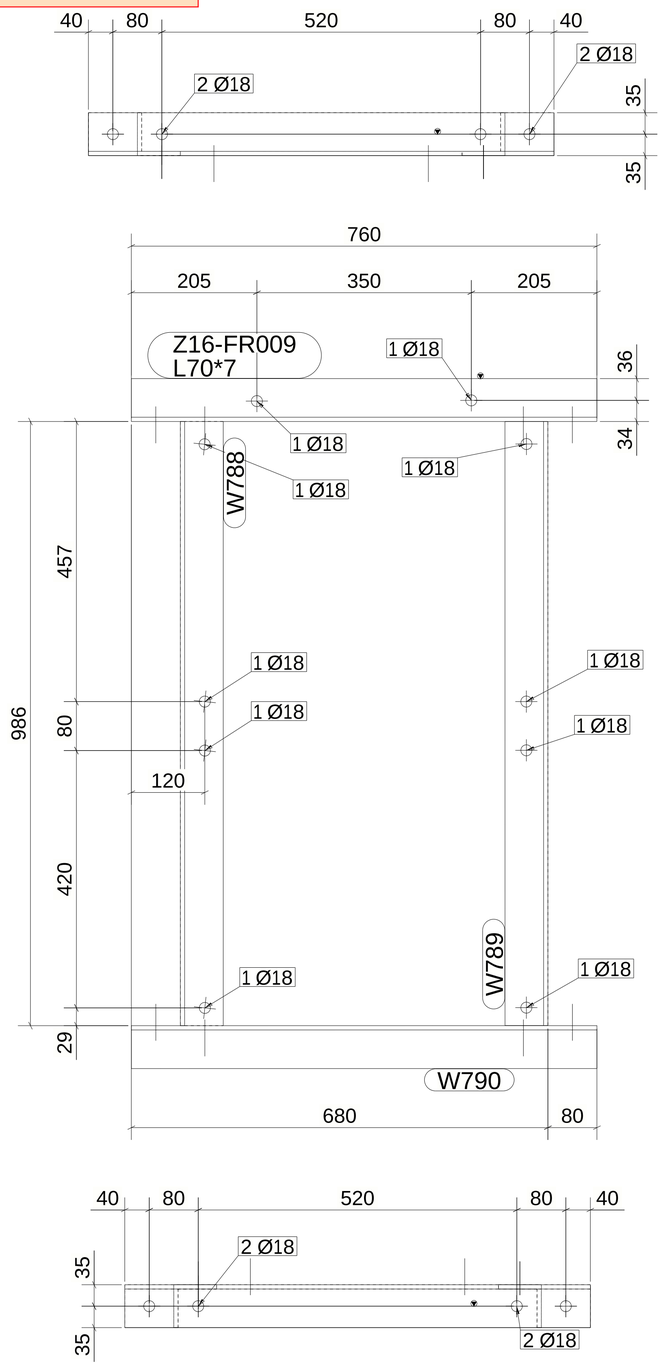

1 *REQUIRED AS DRAWN MARKED* Z16-FR009

MATERIAL LIST FOR ASSEMBLY MK'D Z16-FR009

Mark	Profile	GRADE	No.	Length	Area	Weight
Z16-FR009	L70*7	S235JR	1	760	0.21	5.55
W788	L70*7	S235JR	1	986	0.28	7.21
W789	L70*7	S235JR	1	986	0.28	7.20
W790	L70*7	S235JR	1	760	0.21	5.55
				Total	0.99	25.52

BOLT LIST:-

BOLT \ STUD	BOLT DESCRIPTION	QTY	FINISH
BOLT	B1N2W16 X 50 A325M	8	

GENERAL NOTES:

1. THE DIMENSIONS SHOWN ARE NOMINAL (IN MILLIMETERS), U.N.O.
2. WELD SIZESHALL BE AISC MINIMUM OF 6 mm UNLESS NOTED OTHERWISE.
3. ALL FIELD WELDS SHALL BE INSPECTED PER QUALITY ASSURANCE AND SPECIAL INSPECTIONS.

REFERENCE DRAWINGS

1	93M-BOA-NAT-LOT-04833
2	93M-BOA-NAT-LOT-09170
3	93M-BOA-NAT-LOT-01976
4	93M-BOA-NAT-LOT-20021
5	
6	
7	
8	
9	

6TH OF OCTOBER CITY RAIL TRANSIT MONORAIL

The Authority — Consultant — Main Contractor — Structural Designer

6 October Monorail
Engineering Unit
Valid For Construction

KEY PLAN:

SCALE: AS SHOWN | SHOP DRAWING | DATE: 08/29/2023

REV	DATE	DSG.	CHK.	APP.	AMENDMENTS	STATUS
B	08/29/2023	M.KH	M.KH	DR.M.M	ISSUED FOR INFORMATION	IFI
A	09/21/2022	M.KH	M.KH	DR.M.M	ISSUED FOR INFORMATION	IFI

DRAWING TITLE
6TH OF OCTOBER MONORAIL
SERVICE WALKWAYS
ZONE(1016)
Z16-FR009

Project Code	Rubric	Initiator	Lot	Ref	Number	Revision
93M	047	6ACC	60DE	PDWG	1601	4 B

Tekla structures

Approval is subject to approval of coordination package between multi-discipline.

REVIEWED WITH COMMENT
MONORAILS PROJECT

MATERIAL LIST FOR ASSEMBLY MK'D Z16-BR023

Mark	Profile	GRADE	No.	Length	Area	Weight
Z16-BR023	L100*10	S235JR	1	2808	1.13	41.87
				Total	1.13	41.87

BOLT LIST:-

BOLT \ STUD	BOLT DESCRIPTION	QTY	FINISH
BOLT	B1N2W16 X 55 A325M	4	

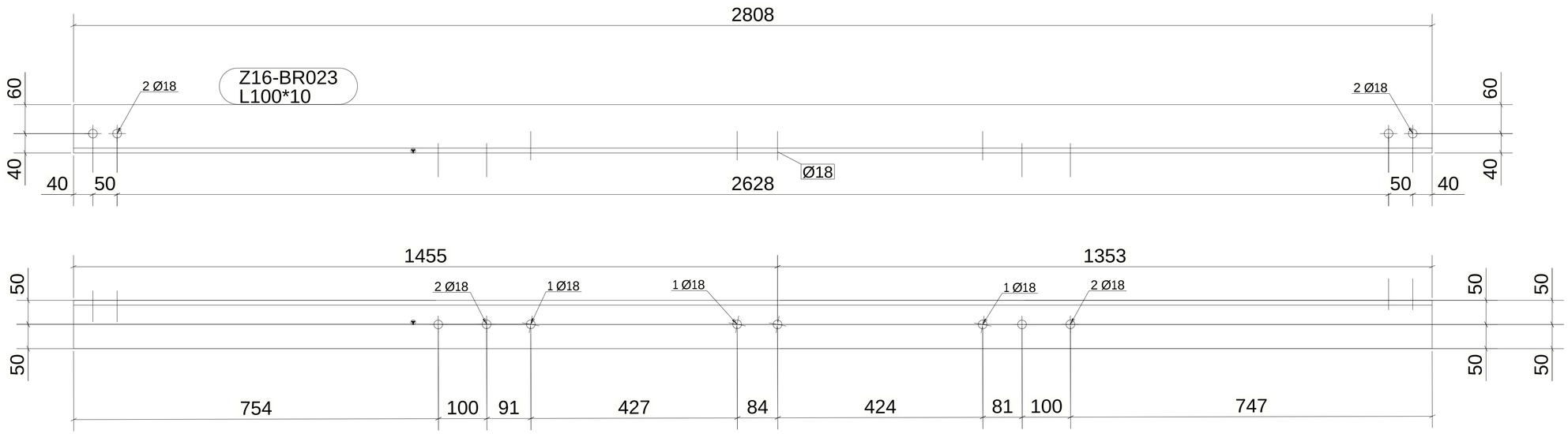

1 *REQUIRED AS DRAWN MARKED* Z16-BR023

6 October Monorail
Engineering Unit
Valid For Construction

GENERAL NOTES:

1. THE DIMENSIONS SHOWN ARE NOMINAL (IN MILLIMETERS), U.N.O.
2. WELD SIZESHALL BE AISC MINIMUM OF 6 mm UNLESS NOTED OTHERWISE.
3. ALL FIELD WELDS SHALL BE INSPECTED PER QUALITY ASSURANCE AND SPECIAL INSPECTIONS.

REFERENCE DRAWINGS

1	93M-BOA-NAT-LOT-04833
2	93M-BOA-NAT-LOT-09170
3	93M-BOA-NAT-LOT-01976
4	93M-BOA-NAT-LOT-20021
5	
6	
7	
8	
9	

6TH OF OCTOBER CITY RAIL TRANSIT MONORAIL

The Authority — Consultant: Hill International — Main Contractor — Structural Designer

KEY PLAN:

SCALE: AS SHOWN | SHOP DRAWING | DATE: 08/29/2023

REV	DATE	DSG.	CHK.	APP.	AMENDMENTS	STATUS
B	08/29/2023	M.KH	M.KH	DR.M.M	ISSUED FOR INFORMATION	IFI
A	09/21/2022	M.KH	M.KH	DR.M.M	ISSUED FOR INFORMATION	IFI

DRAWING TITLE
6TH OF OCTOBER MONORAIL
SERVICE WALKWAYS
ZONE(1016)
Z16-BR023

Project Code	Rubric	Initiator	Lot	Ref	Number	Revision
9 3 M	0 4 7 6	A C C	6 0 D E P	D W G	1 6 0 1 5	B

Tekla structures

Same comments as 93M-0476-ACC-60DEP-DWG-16008-B.

REVIEWED WITH COMMENT MONORAILS PROJECT

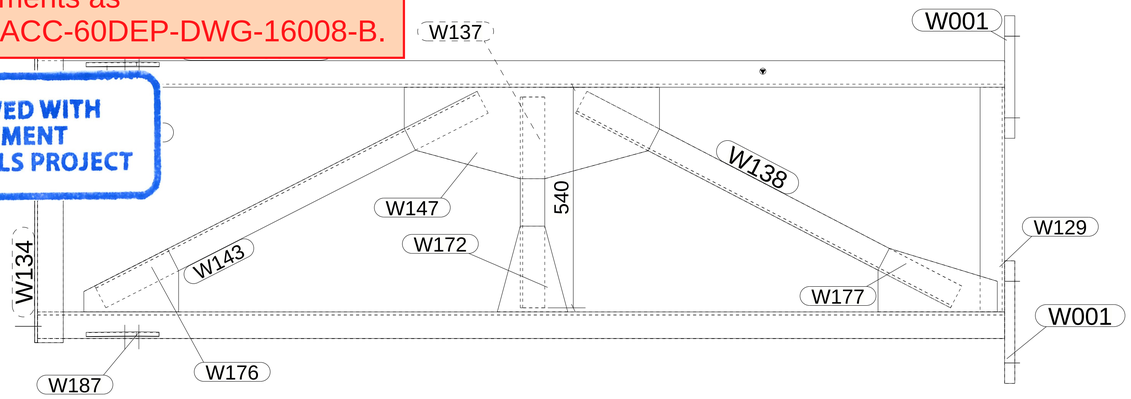

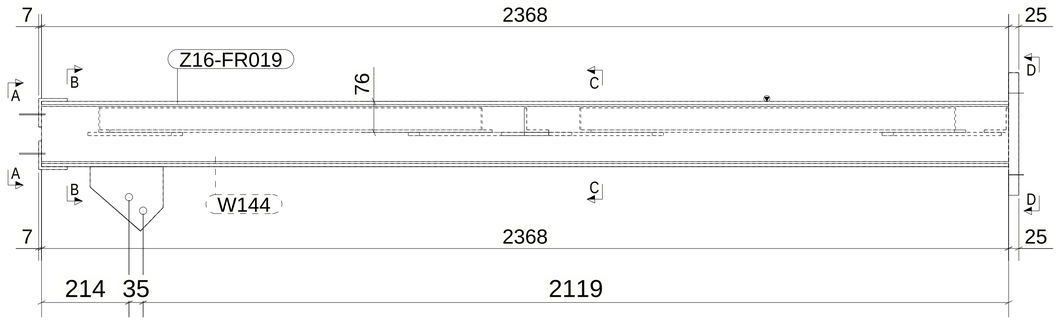

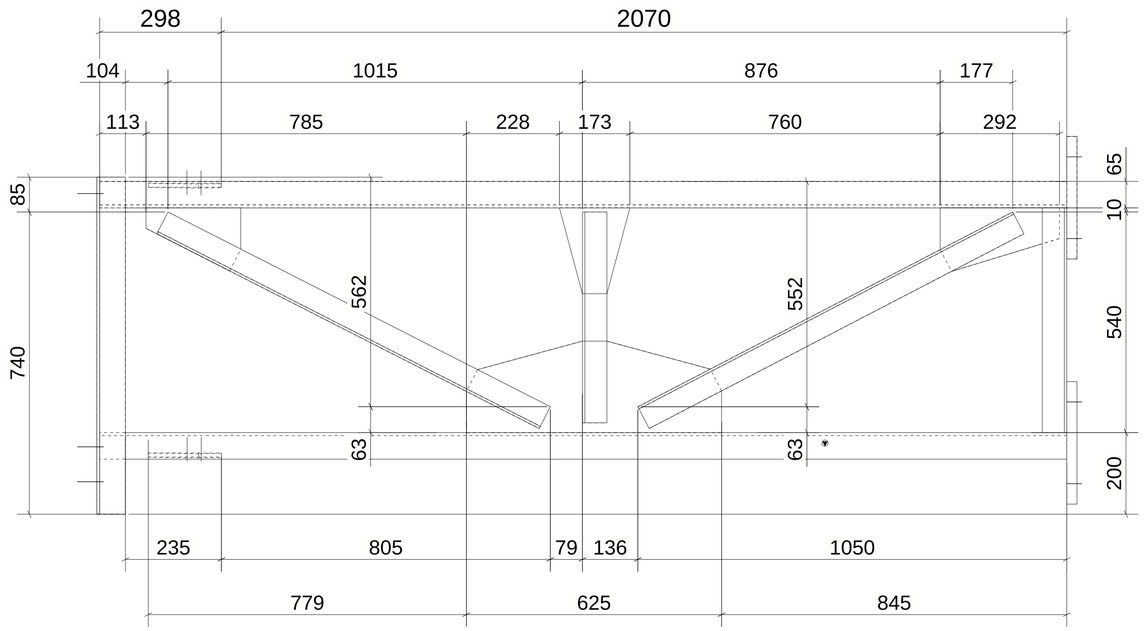

MATERIAL LIST FOR ASSEMBLY MK'D Z16-FR019

Mark	Profile	GRADE	No.	Length	Area	Weight
Z16-FR019	UPN160	S235JR	1	2368	1.30	44.61
W001	PL25*300	S355JR	2	300	0.21	17.66
W129	L60*6	S235JR	1	550	0.13	2.95
W134	L70*7	S235JR	1	825	0.23	6.03
W137	L60*6	S235JR	1	516	0.13	2.77
W138	L60*6	S235JR	1	1034	0.25	5.55
W143	L60*6	S235JR	1	1051	0.25	5.64
W144	UPN160	S235JR	1	2368	1.30	44.61
W146	L70*7	S235JR	1	825	0.23	6.03
W147	PL8*223.9	S355JR	1	625	0.25	7.35
W172	PL8*166.7	S355JR	1	233	0.05	1.53
W176	PL8*154.2	S355JR	1	232	0.05	1.53
W177	PL8*155.4	S355JR	1	292	0.07	2.14
W187	PL10*157.4	S355JR	2	179	0.05	1.57
				Total	4.77	169.21

BOLT LIST:-

BOLT \ STUD	BOLT DESCRIPTION	QTY	FINISH

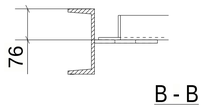

B - B

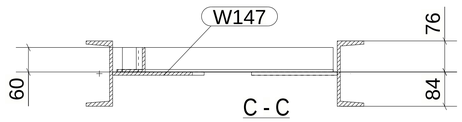

C - C

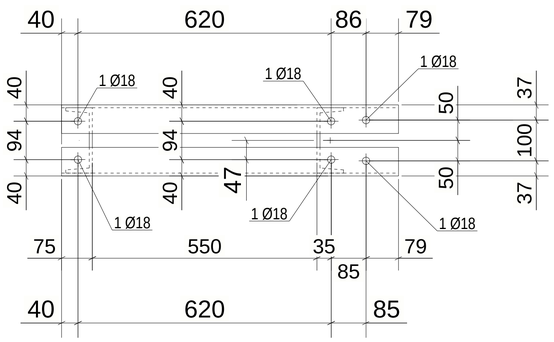

A - A

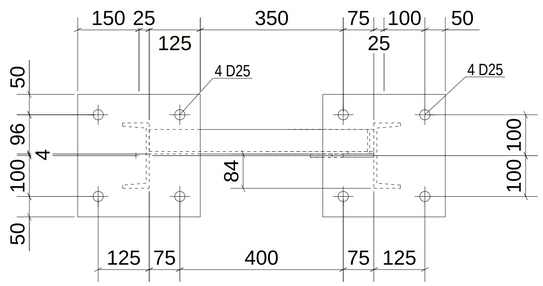

D - D

1 *REQUIRED AS DRAWN MARKED* Z16-FR019

6 October Monorail
Engineering Unit
Valid For Construction

GENERAL NOTES:

1. THE DIMENSIONS SHOWN ARE NOMINAL (IN MILLIMETERS), U.N.O.
2. WELD SIZESHALL BE AISC MINIMUM OF 6 mm UNLESS NOTED OTHERWISE.
3. ALL FIELD WELDS SHALL BE INSPECTED PER QUALITY ASSURANCE AND SPECIAL INSPECTIONS.

REFERENCE DRAWINGS

1	93M-BOA-NAT-LOT-04833
2	93M-BOA-NAT-LOT-09170
3	93M-BOA-NAT-LOT-01976
4	93M-BOA-NAT-LOT-20021
5	
6	
7	
8	
9	

6TH OF OCTOBER CITY RAIL TRANSIT MONORAIL

The Authority — Consultant — Main Contractor — Structural Designer

KEY PLAN:

SCALE: AS SHOWN | SHOP DRAWING | DATE: 08/29/2023

REV	DATE	DSG.	CHK.	APP.	AMENDMENTS	STATUS
B	08/29/2023	M.KH	M.KH	DR.M.M	ISSUED FOR INFORMATION	IFI
A	09/21/2022	M.KH	M.KH	DR.M.M	ISSUED FOR INFORMATION	IFI

DRAWING TITLE
6TH OF OCTOBER MONORAIL
SERVICE WALKWAYS
ZONE(1016)
Z16-FR019

Project Code	Rubric	Initiator	Lot	Ref	Number	Revision
93M	047	6ACC	60DE	PDWG	16016	B

Tekla structures

Same comments as 93M-0476-ACC-60DEP-DWG-16008-B.

REVIEWED WITH COMMENT MONORAILS PROJECT

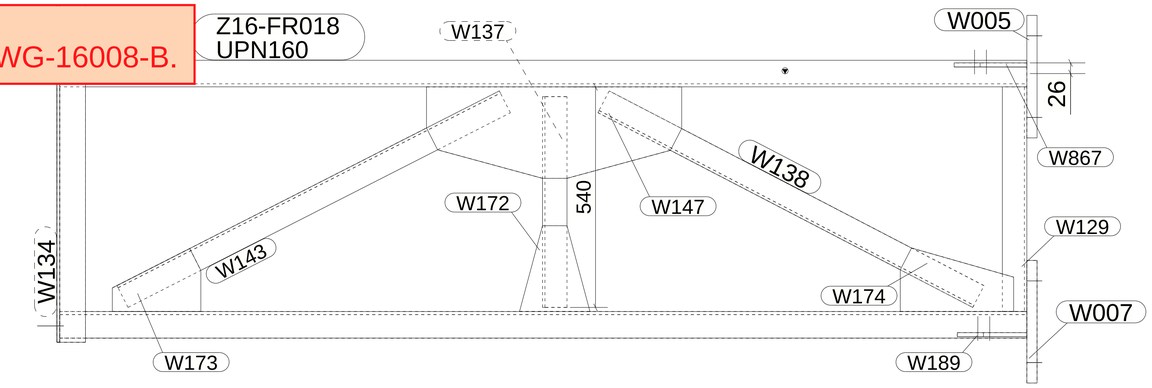

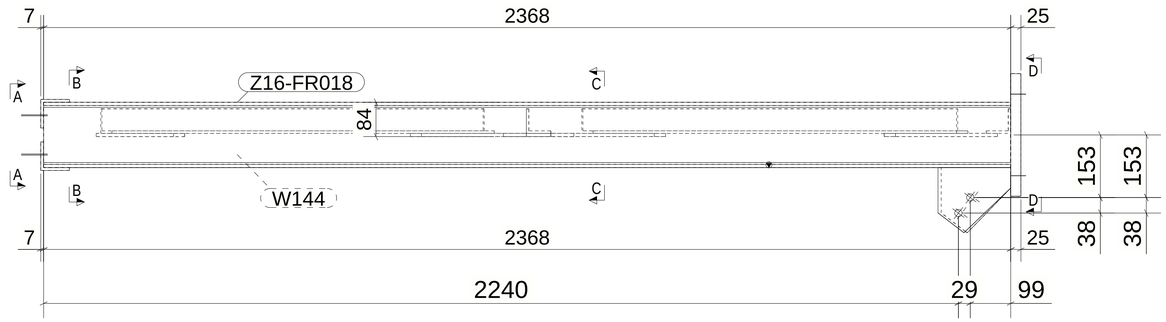

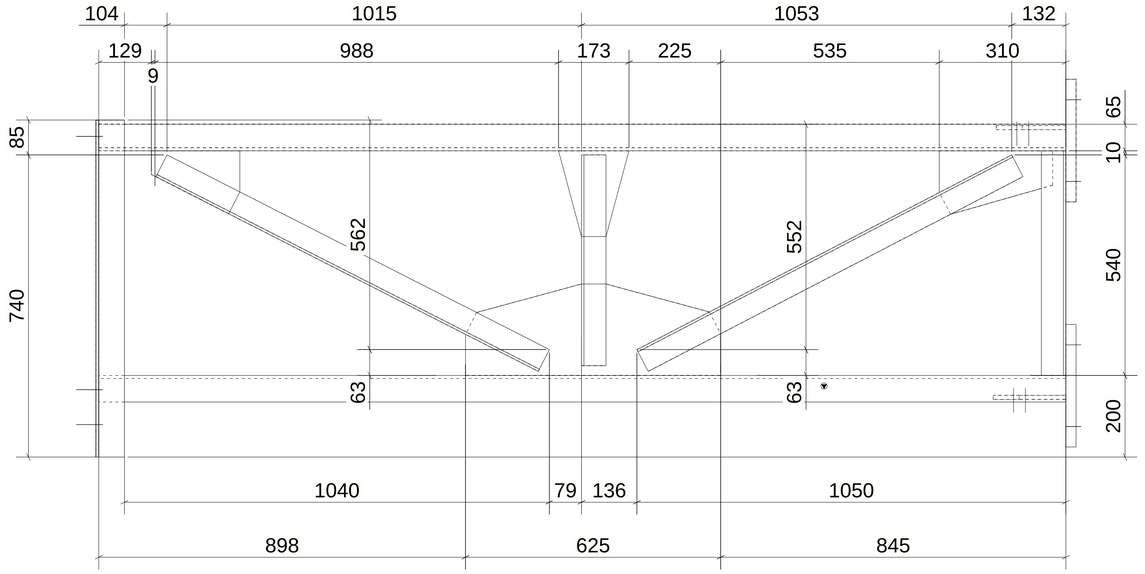

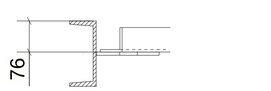

B - B

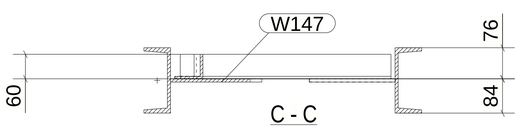

C - C

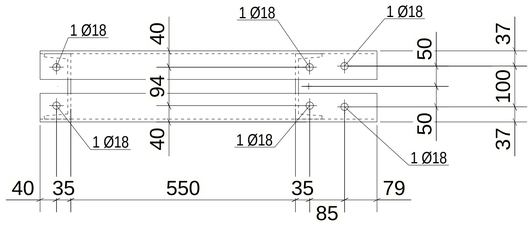

A - A

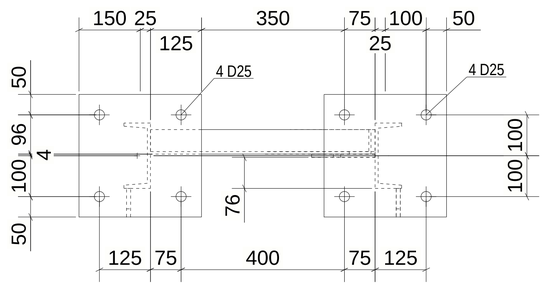

D - D

MATERIAL LIST FOR ASSEMBLY MK'D Z16-FR018

Mark	Profile	GRADE	No.	Length	Area	Weight
Z16-FR018	UPN160	S235JR	1	2368	1.30	44.61
W005	PL25*300	S355JR	1	300	0.21	17.66
W007	PL25*300	S355JR	1	300	0.21	17.66
W129	L60*6	S235JR	1	550	0.13	2.95
W134	L70*7	S235JR	1	825	0.23	6.03
W137	L60*6	S235JR	1	516	0.13	2.77
W138	L60*6	S235JR	1	1034	0.25	5.55
W143	L60*6	S235JR	1	1051	0.25	5.64
W144	UPN160	S235JR	1	2368	1.30	44.61
W146	L70*7	S235JR	1	825	0.23	6.03
W147	PL8*223.9	S355JR	1	625	0.25	7.35
W172	PL8*166.7	S355JR	1	233	0.05	1.53
W173	PL8*154.2	S355JR	1	217	0.05	1.48
W174	PL8*155.4	S355JR	1	278	0.07	2.10
W189	PL10*159.6	S355JR	1	170	0.05	1.55
W867	PL10*159.4	S355JR	1	178	0.05	1.62
				Total	4.77	169.16

BOLT LIST:-

BOLT \ STUD	BOLT DESCRIPTION	QTY	FINISH

1 *REQUIRED AS DRAWN MARKED* Z16-FR018

6 October Monorail
Engineering Unit
Valid For Construction

GENERAL NOTES:

1. THE DIMENSIONS SHOWN ARE NOMINAL (IN MILLIMETERS), U.N.O.
2. WELD SIZESHALL BE AISC MINIMUM OF 6 mm UNLESS NOTED OTHERWISE.
3. ALL FIELD WELDS SHALL BE INSPECTED PER QUALITY ASSURANCE AND SPECIAL INSPECTIONS.

REFERENCE DRAWINGS

1	93M-BOA-NAT-LOT-04833
2	93M-BOA-NAT-LOT-09170
3	93M-BOA-NAT-LOT-01976
4	93M-BOA-NAT-LOT-20021
5	
6	
7	
8	
9	

6TH OF OCTOBER CITY RAIL TRANSIT MONORAIL

The Authority | Consultant: Hill International | Main Contractor: ORASCOM CONSTRUCTION, BOMBARDIER | Structural Designer: INNOVA TRANSPORTATION

KEY PLAN:

SCALE: AS SHOWN | SHOP DRAWING | DATE: 08/29/2023

DRAWING TITLE
6TH OF OCTOBER MONORAIL
SERVICE WALKWAYS
ZONE(1016)
Z16-FR018

REV	DATE	DSG.	CHK.	APP.	AMENDMENTS	STATUS
B	08/29/2023	M.KH	M.KH	DR.M.M	ISSUED FOR INFORMATION	IFI
A	09/21/2022	M.KH	M.KH	DR.M.M	ISSUED FOR INFORMATION	IFI

Project Code	Rubric	Initiator	Lot	Ref	Number	Revision
93M	0476	ACC	60DEP	DWG	16017	B

Tekla structures

Approval is subject to approval of coordination package between multi-discipline.

REVIEWED WITH COMMENT MONORAILS PROJECT

MATERIAL LIST FOR ASSEMBLY MK'D Z16-BR024

Mark	Profile	GRADE	No.	Length	Area	Weight
Z16-BR024	L100*10	S235JR	1	2806	1.13	41.85
				Total	1.13	41.85

BOLT LIST:-

BOLT \ STUD	BOLT DESCRIPTION	QTY	FINISH
BOLT	B1N2W16 X 55 A325M	4	

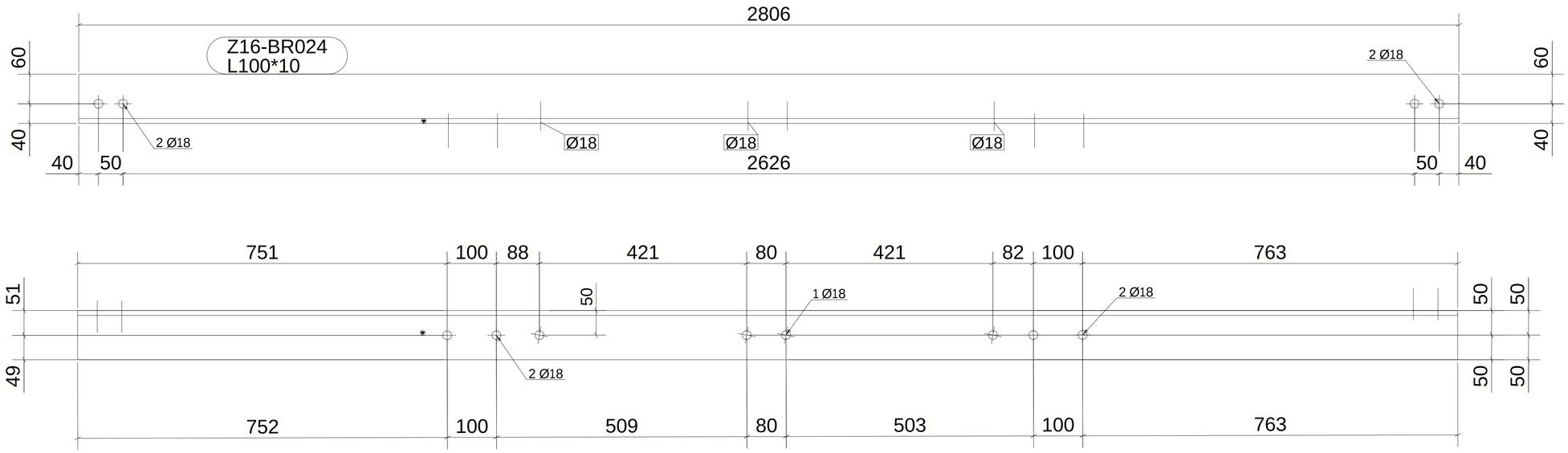

1 *REQUIRED AS DRAWN MARKED* Z16-BR024

6 October Monorail Engineering Unit
Valid For Construction

GENERAL NOTES:

1. THE DIMENSIONS SHOWN ARE NOMINAL (IN MILLIMETERS), U.N.O.
2. WELD SIZESHALL BE AISC MINIMUM OF 6 mm UNLESS NOTED OTHERWISE.
3. ALL FIELD WELDS SHALL BE INSPECTED PER QUALITY ASSURANCE AND SPECIAL INSPECTIONS.

REFERENCE DRAWINGS

1	93M-BOA-NAT-LOT-04833
2	93M-BOA-NAT-LOT-09170
3	93M-BOA-NAT-LOT-01976
4	93M-BOA-NAT-LOT-20021
5	
6	
7	
8	
9	

6TH OF OCTOBER CITY RAIL TRANSIT MONORAIL

The Authority — Hill International Consultant — Main Contractor — Structural Designer

KEY PLAN:

SCALE: AS SHOWN | SHOPDRAWING | DATE: 08/29/2023

REV	DATE	DSG.	CHK.	APP.	AMENDMENTS	STATUS
B	08/29/2023	M.KH	M.KH	DR.M.M	ISSUED FOR INFORMATION	IFI
A	09/21/2022	M.KH	M.KH	DR.M.M	ISSUED FOR INFORMATION	IFI

DRAWING TITLE
6TH OF OCTOBER MONORAIL SERVICE WALKWAYS ZONE(1016)
Z16-BR024

Project Code	Rubric	Initiator	Lot	Ref	Number	Revision
93M	0476	ACC	60DEP	DWG	16018	B

Tekla structures

Same comments as
93M-0476-ACC-60DEP-DWG-16008-B.

REVIEWED WITH COMMENT
MONORAILS PROJECT

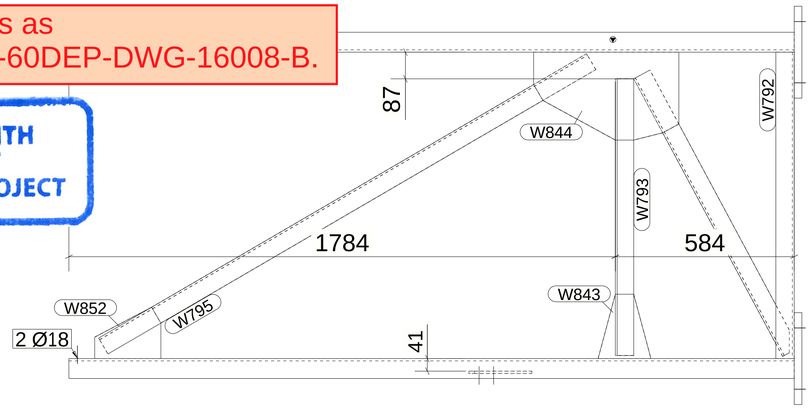

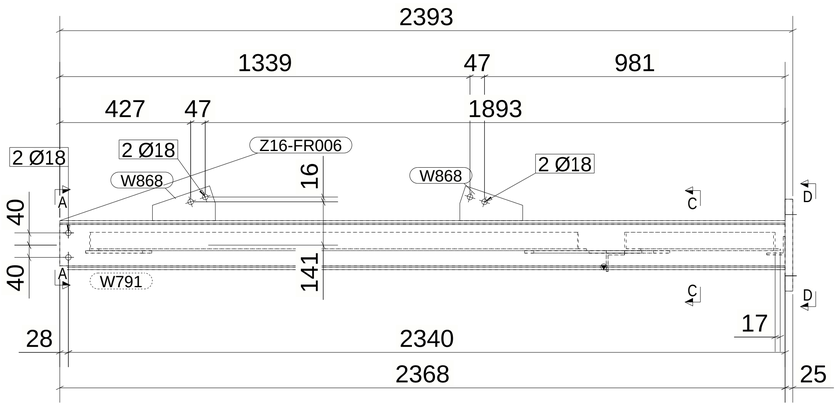

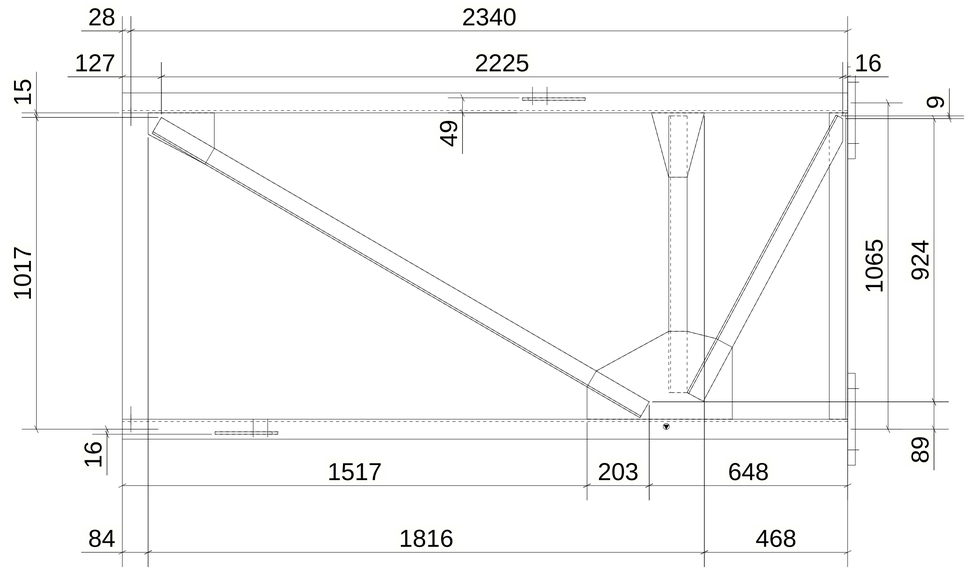

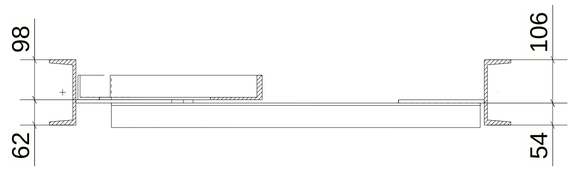

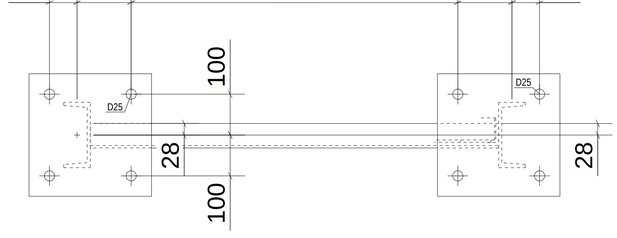

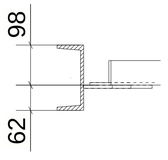

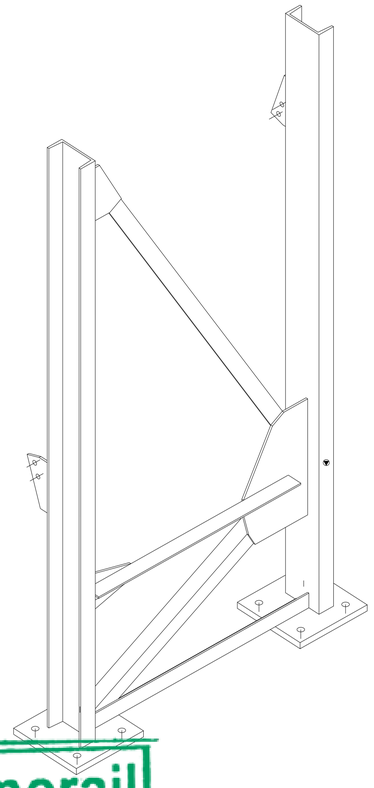

MATERIAL LIST FOR ASSEMBLY MK'DZ16-FR006

Mark	Profile	GRADE	No.	Length	Area	Weight
Z16-FR006	UPN160	S235JR	1	2368	1.30	44.61
W791	UPN160	S235JR	1	2368	1.30	44.61
W792	L60*6	S235JR	1	1000	0.24	5.37
W793	L60*6	S235JR	1	903	0.22	4.85
W794	L60*6	S235JR	1	1028	0.25	5.47
W795	L60*6	S235JR	1	1844	0.44	9.90
W843	PL8*166.7	S355JR	1	233	0.05	1.53
W844	PL8*286.9	S355JR	1	474	0.24	7.09
W852	PL8*167.5	S355JR	1	216	0.06	1.65
W868	PL8*113.4	S355JR	2	205	0.04	1.06
W869	PL25*300	S355JR	2	300	0.21	17.66
				Total	4.60	162.53

BOLT LIST:-

BOLT \ STUD	BOLT DESCRIPTION		QTY	FINISH
BOLT	B1N2W 16 X 50	A325M	4	

1 *REQUIRED AS DRAWN MARKED* Z16-FR006

GENERAL NOTES:

1. THE DIMENSIONS SHOWN ARE NOMINAL (IN MILLIMETERS), U.N.O.
2. WELD SIZESHALL BE AISC MINIMUM OF 6 mm UNLESS NOTED OTHERWISE.
3. ALL FIELD WELDS SHALL BE INSPECTED PER QUALITY ASSURANCE AND SPECIAL INSPECTIONS.

REFERENCE DRAWINGS

1	93M-BOA-NAT-LOT-04833
2	93M-BOA-NAT-LOT-09170
3	93M-BOA-NAT-LOT-01976
4	93M-BOA-NAT-LOT-20021
5	
6	
7	
8	
9	

6TH OF OCTOBER CITY RAIL TRANSIT MONORAIL

The Authority | Hill International Consultant | ORASCOM / BOMBARDIER Main Contractor | INNOVA TRANSPORTATION Structural Designer

KEY PLAN:

6 October Monorail
Engineering Unit
Valid For Construction

SCALE: AS SHOWN | SHOP DRAWING | DATE: 08/29/2023

REV	DATE	DSG.	CHK.	APP.	AMENDMENTS	STATUS
B	08/29/2023	M.KH	M.KH	DR.M.M	ISSUED FOR INFORMATION	IFI
A	09/21/2022	M.KH	M.KH	DR.M.M	ISSUED FOR INFORMATION	IFI

DRAWING TITLE
6TH OF OCTOBER MONORAIL
SERVICE WALKWAYS
ZONE(1016)
Z16-FR006

Project Code	Rubric	Initiator	Lot	Ref	Number	Revision
93M	0476	ACC	60DEP	DWG	16019	B

Tekla structures

Same comments as
93M-0476-ACC-60DEP-DWG-16013-B.

REVIEWED WITH COMMENT
MONORAILS PROJECT

MATERIAL LIST FOR ASSEMBLY MK'DZ16-PO005

Mark	Profile	GRADE	No.	Length	Area	Weight
Z16-PO005	L70*7	S235JR	1	1180	0.33	8.62
W271	PL16*100	S355JR	1	160	0.04	2.01
W445	PL10*25	S355JR	1	98	0.01	0.19
W460	PIPE2SCH40	S235JR	1	25	0.01	0.14
				Total	0.39	10.96

BOLT LIST:-

BOLT \ STUD	BOLT DESCRIPTION	QTY	FINISH
BOLT	B1N2W16 X 55 A325M	2	

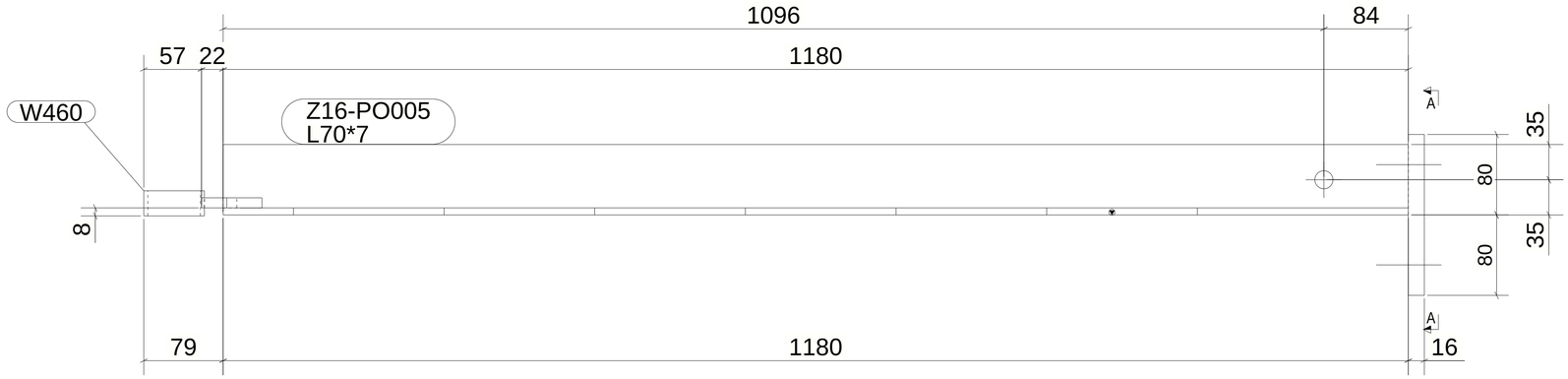

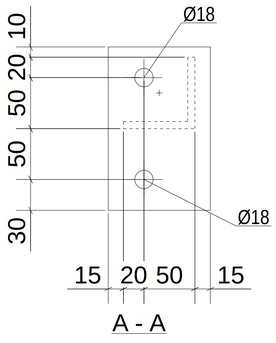

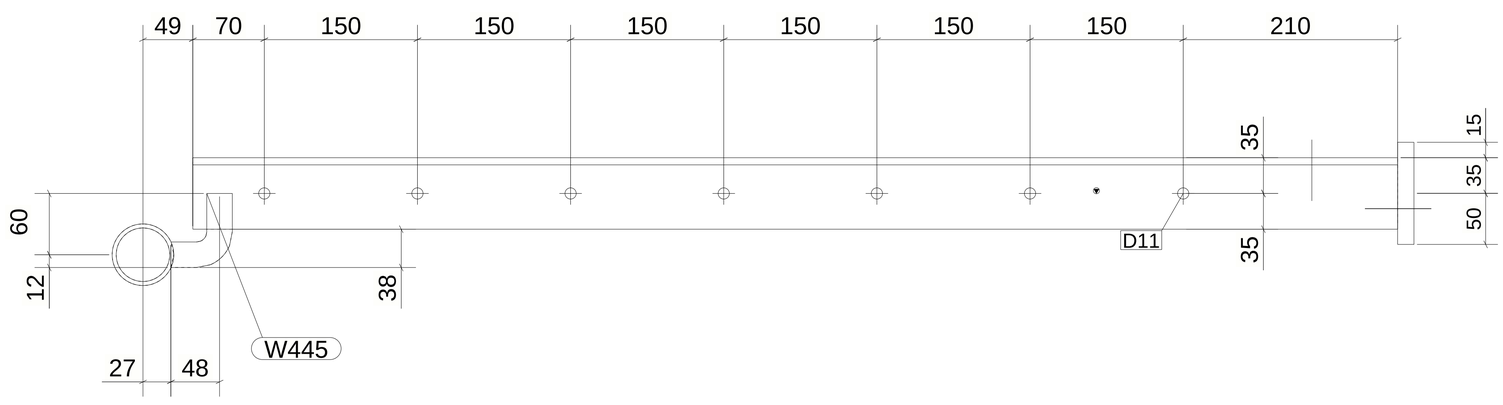

4 *REQUIRED AS DRAWN MARKED* Z16-PO005

6 October Monorail
Engineering Unit
Valid For Construction

GENERAL NOTES:

1. THE DIMENSIONS SHOWN ARE NOMINAL (IN MILLIMETERS), U.N.O.
2. WELD SIZESHALL BE AISC MINIMUM OF 6 mm UNLESS NOTED OTHERWISE.
3. ALL FIELD WELDS SHALL BE INSPECTED PER QUALITY ASSURANCE AND SPECIAL INSPECTIONS.

REFERENCE DRAWINGS

1	93M-BOA-NAT-LOT-04833
2	93M-BOA-NAT-LOT-09170
3	93M-BOA-NAT-LOT-01976
4	93M-BOA-NAT-LOT-20021
5	
6	
7	
8	
9	

6TH OF OCTOBER CITY RAIL TRANSIT MONORAIL

The Authority — Hill International Consultant — Main Contractor — Structural Designer

KEY PLAN:

SCALE: AS SHOWN | SHOP DRAWING | DATE: 08/29/2023

REV	DATE	DSG.	CHK.	APP.	AMENDMENTS	STATUS
B	08/29/2023	M.KH	M.KH	DR.M.M	ISSUED FOR INFORMATION	IFI
A	09/21/2022	M.KH	M.KH	DR.M.M	ISSUED FOR INFORMATION	IFI

DRAWING TITLE
6TH OF OCTOBER MONORAIL
SERVICE WALKWAYS
ZONE(1016)
Z16-PO005

Project Code	Rubric	Initiator	Lot	Ref	Number	Revision
93	M047	6ACC	60DEP	DWG	160220	B

Tekla structures

Same comments as 93M-0476-ACC-60DEP-DWG-16008-B.

REVIEWED WITH COMMENT
MONORAILS PROJECT

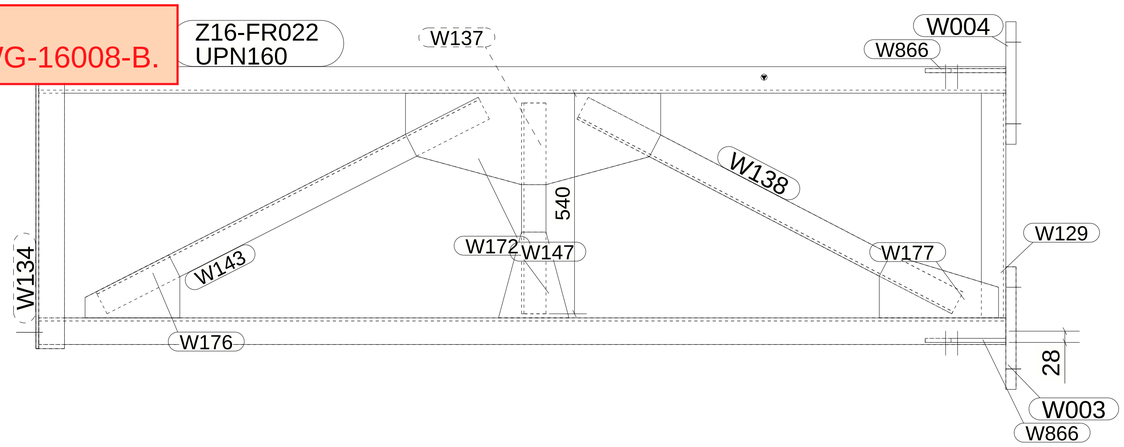

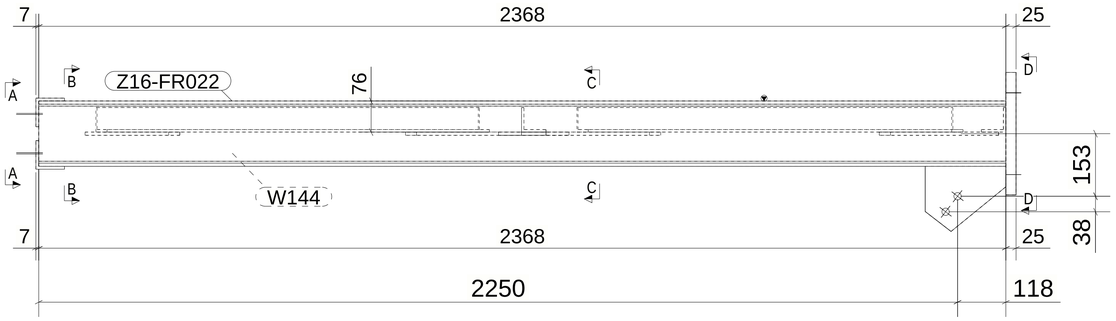

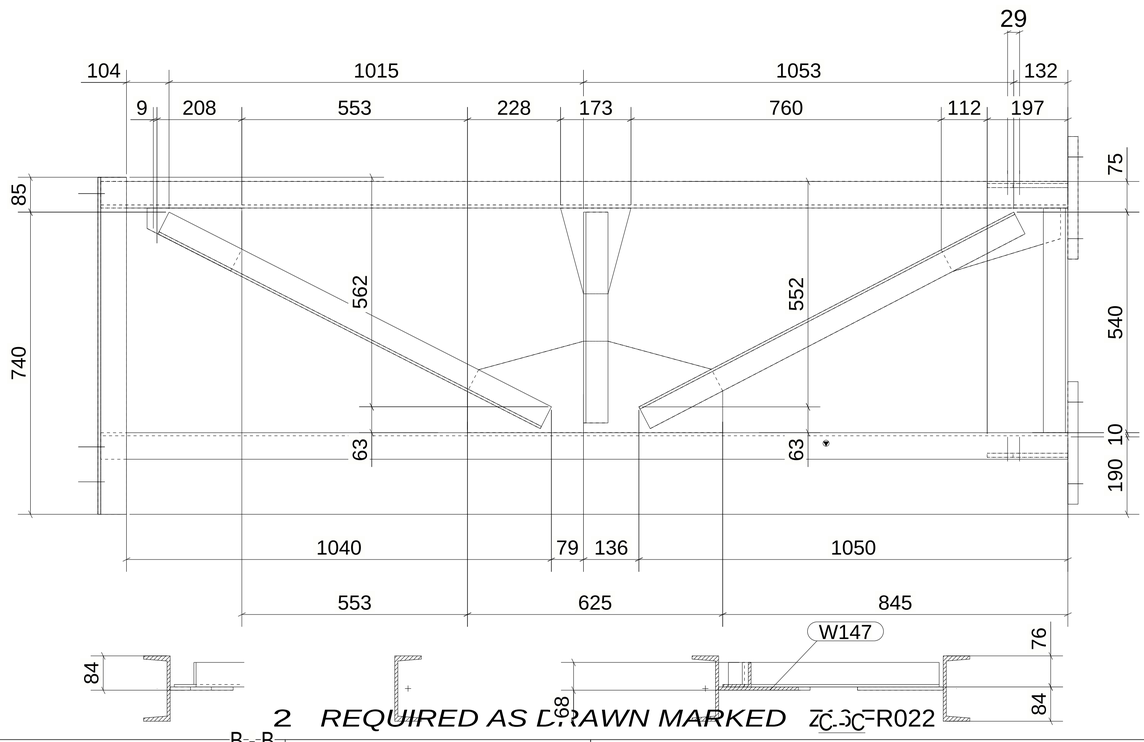

B - B

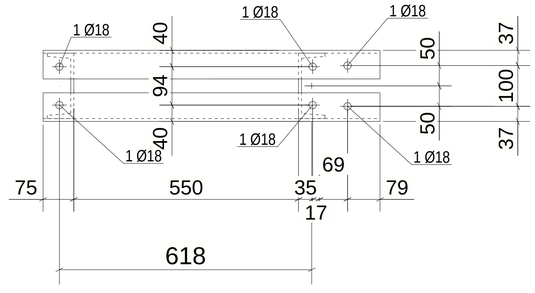

A - A

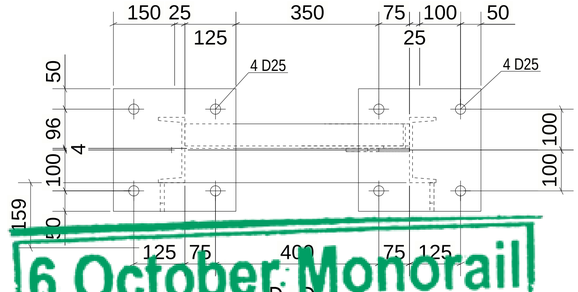

D - D

2 REQUIRED AS DRAWN MARKED ZC-3C-R022

MATERIAL LIST FOR ASSEMBLY MK'D Z16-FR022						
Mark	Profile	GRADE	No.	Length	Area	Weight
Z16-FR022	UPN160	S235JR	1	2368	1.30	44.61
W003	PL25*300	S355JR	1	300	0.21	17.66
W004	PL25*300	S355JR	1	300	0.21	17.66
W129	L60*6	S235JR	1	550	0.13	2.95
W134	L70*7	S235JR	1	825	0.23	6.03
W137	L60*6	S235JR	1	516	0.13	2.77
W138	L60*6	S235JR	1	1034	0.25	5.55
W143	L60*6	S235JR	1	1051	0.25	5.64
W144	UPN160	S235JR	1	2368	1.30	44.61
W146	L70*7	S235JR	1	825	0.23	6.03
W147	PL8*223.9	S355JR	1	625	0.25	7.35
W172	PL8*166.7	S355JR	1	233	0.05	1.53
W176	PL8*154.2	S355JR	1	232	0.05	1.53
W177	PL8*155.4	S355JR	1	292	0.07	2.14
W866	PL10*159.4	S355JR	2	197	0.05	1.77
				Total	4.78	169.63

BOLT LIST:-

BOLT \ STUD	BOLT DESCRIPTION	QTY	FINISH

6 October Monorail
Engineering Unit
Valid For Construction

GENERAL NOTES:

1. THE DIMENSIONS SHOWN ARE NOMINAL (IN MILLIMETERS), U.N.O.
2. WELD SIZESHALL BE AISC MINIMUM OF 6 mm UNLESS NOTED OTHERWISE.
3. ALL FIELD WELDS SHALL BE INSPECTED PER QUALITY ASSURANCE AND SPECIAL INSPECTIONS.

REFERENCE DRAWINGS

1	93M-BOA-NAT-LOT-04833
2	93M-BOA-NAT-LOT-09170
3	93M-BOA-NAT-LOT-01976
4	93M-BOA-NAT-LOT-20021
5	
6	
7	
8	
9	

6TH OF OCTOBER CITY RAIL TRANSIT MONORAIL

The Authority | Consultant: Hill International | Main Contractor: ORASCOM CONSTRUCTION / BOMBARDIER | Structural Designer: INNOVA TRANSPORTATION

KEY PLAN:

SCALE: AS SHOWN | SHOP DRAWING | DATE: 08/29/2023

REV	DATE	DSG.	CHK.	APP.	AMENDMENTS	STATUS
B	08/29/2023	M.KH	M.KH	DR.M.M	ISSUED FOR INFORMATION	IFI
A	09/21/2022	M.KH	M.KH	DR.M.M	ISSUED FOR INFORMATION	IFI

DRAWING TITLE
6TH OF OCTOBER MONORAIL
SERVICE WALKWAYS
ZONE(1016)
Z16-FR022

Project Code	Rubric	Initiator	Lot	Ref	Number	Revision
93	M047	6ACC	60DE	PDWG	16021	B

Tekla structures

Approval is subject to approval of coordination package between multi-discipline.

REVIEWED WITH COMMENT
MONORAILS PROJECT

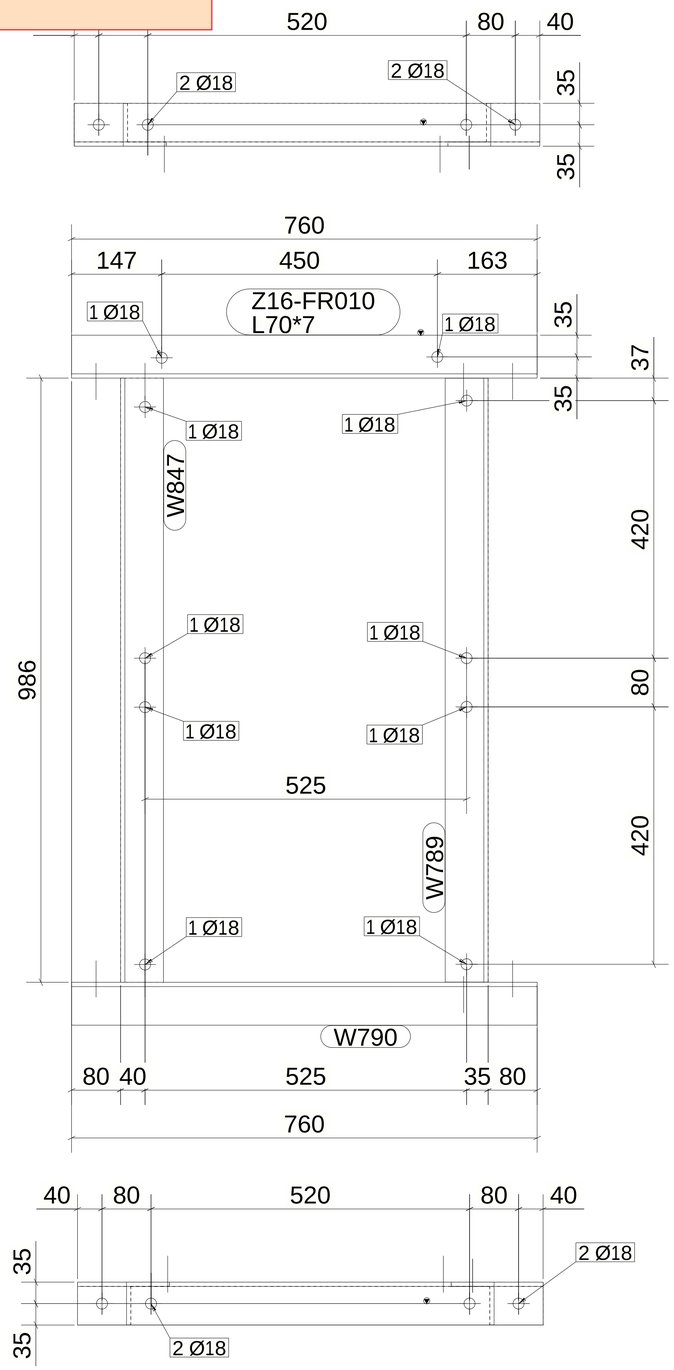

MATERIAL LIST FOR ASSEMBLY MK'D Z16-FR010

Mark	Profile	GRADE	No.	Length	Area	Weight
Z16-FR010	L70*7	S235JR	1	760	0.21	5.55
W789	L70*7	S235JR	1	986	0.28	7.20
W790	L70*7	S235JR	1	760	0.21	5.55
W847	L70*7	S235JR	1	986	0.28	7.21
				Total	0.99	25.52

BOLT LIST:-

BOLT \ STUD	BOLT DESCRIPTION		QTY	FINISH
BOLT	B1N2W16 X 50	A325M	8	

1 *REQUIRED AS DRAWN MARKED* Z16-FR010

GENERAL NOTES:

1. THE DIMENSIONS SHOWN ARE NOMINAL (IN MILLIMETERS), U.N.O.
2. WELD SIZESHALL BE AISC MINIMUM OF 6 mm UNLESS NOTED OTHERWISE.
3. ALL FIELD WELDS SHALL BE INSPECTED PER QUALITY ASSURANCE AND SPECIAL INSPECTIONS.

REFERENCE DRAWINGS

1	93M-BOA-NAT-LOT-04833
2	93M-BOA-NAT-LOT-09170
3	93M-BOA-NAT-LOT-01976
4	93M-BOA-NAT-LOT-20021
5	
6	
7	
8	
9	

6TH OF OCTOBER CITY RAIL TRANSIT MONORAIL

The Authority | Consultant: Hill International | Main Contractor: ORASCOM CONSTRUCTION, BOMBARDIER | Structural Designer: INNOVA TRANSPORTATION

6 October Monorail
Engineering Unit
Valid For Construction

KEY PLAN:

SCALE: AS SHOWN | SHOP DRAWING | DATE: 08/29/2023

REV	DATE	DSG.	CHK.	APP.	AMENDMENTS	STATUS
B	08/29/2023	M.KH	M.KH	DR.M.M	ISSUED FOR INFORMATION	IFI
A	09/21/2022	M.KH	M.KH	DR.M.M	ISSUED FOR INFORMATION	IFI

DRAWING TITLE
6TH OF OCTOBER MONORAIL
SERVICE WALKWAYS
ZONE(1016)
Z16-FR010

Project Code	Rubric	Initiator	Lot	Ref	Number	Revision
93M	047	6ACC	60DE	PDWG	16022	B

Tekla structures

Same comments as 93M-0476-ACC-60DEP-DWG-16008-B.

REVIEWED WITH COMMENT MONORAILS PROJECT

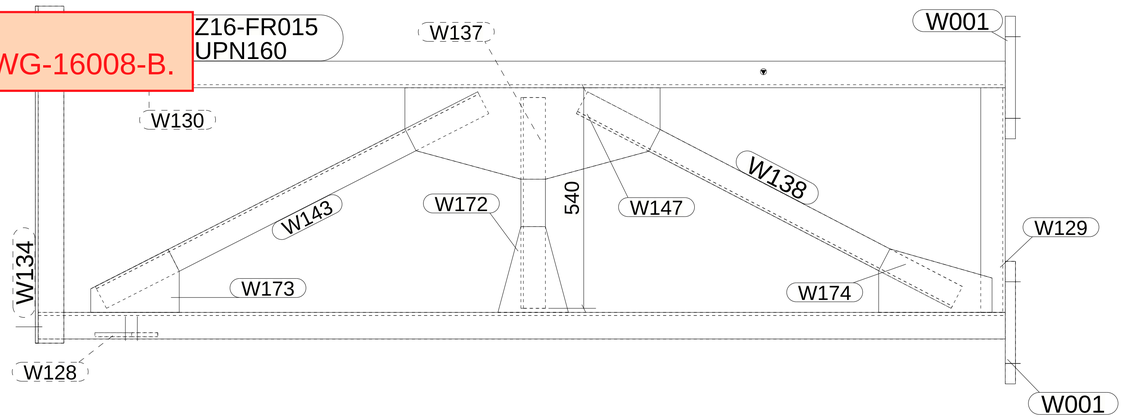

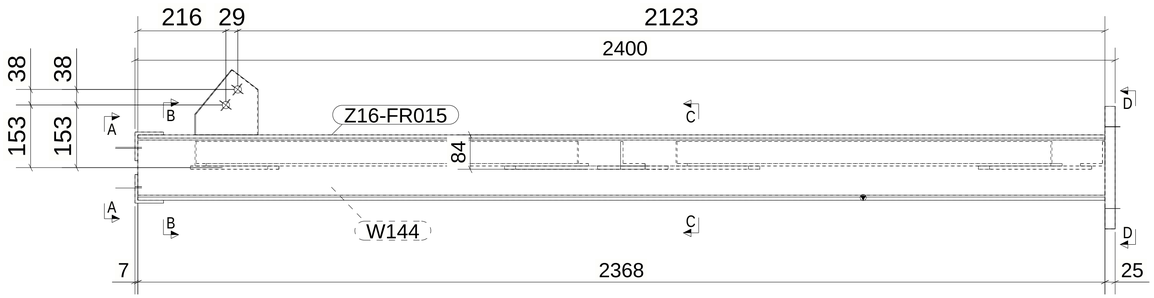

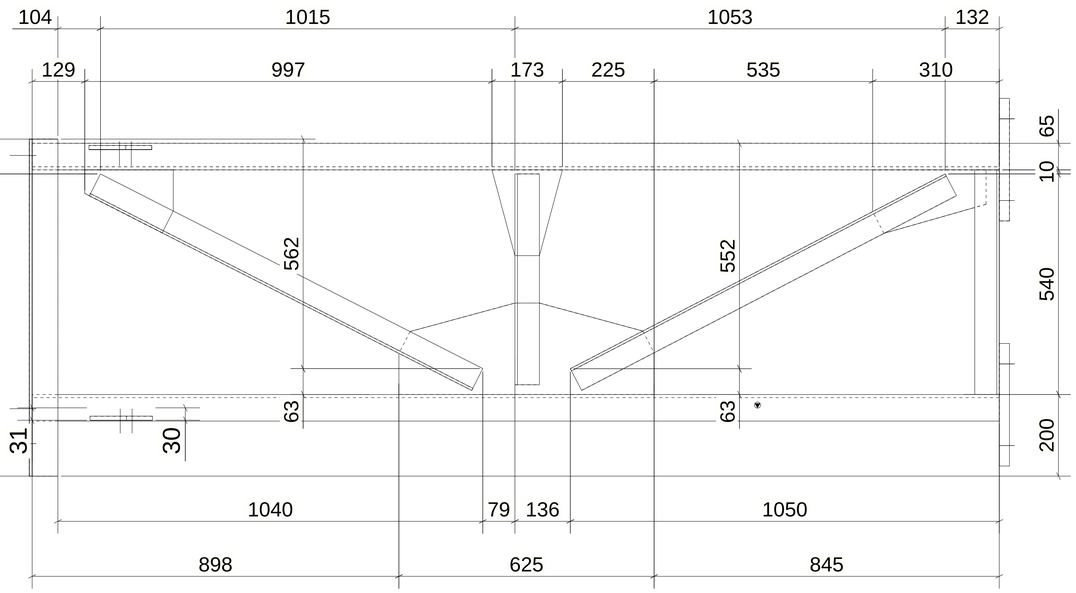

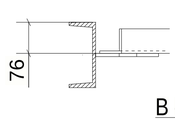

B - B

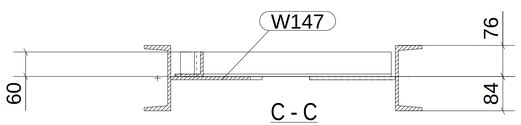

C - C

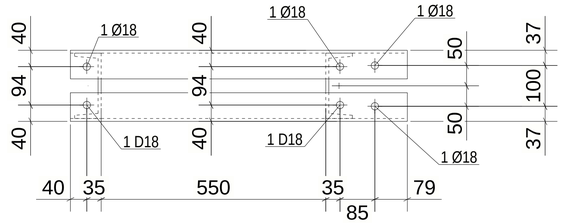

A - A

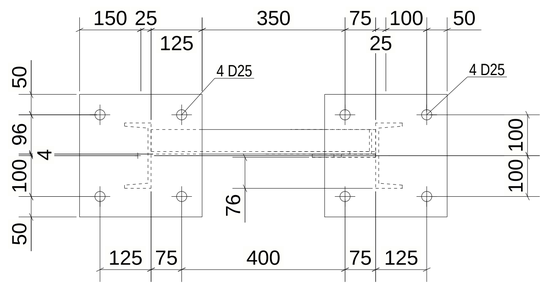

D - D

MATERIAL LIST FOR ASSEMBLY MK'D Z16-FR015

Mark	Profile	GRADE	No.	Length	Area	Weight
Z16-FR015	UPN160	S235JR	1	2368	1.30	44.61
W001	PL25*300	S355JR	2	300	0.21	17.66
W128	PL10*153.9	S355JR	1	160	0.04	1.42
W129	L60*6	S235JR	1	550	0.13	2.95
W130	PL10*153.1	S355JR	1	159	0.04	1.41
W134	L70*7	S235JR	1	825	0.23	6.03
W137	L60*6	S235JR	1	516	0.13	2.77
W138	L60*6	S235JR	1	1034	0.25	5.55
W143	L60*6	S235JR	1	1051	0.25	5.64
W144	UPN160	S235JR	1	2368	1.30	44.61
W146	L70*7	S235JR	1	825	0.23	6.03
W147	PL8*223.9	S355JR	1	625	0.25	7.35
W172	PL8*166.7	S355JR	1	233	0.05	1.53
W173	PL8*154.2	S355JR	1	217	0.05	1.48
W174	PL8*155.4	S355JR	1	278	0.07	2.10
				Total	4.76	168.82

BOLT LIST:-

BOLT \ STUD	BOLT DESCRIPTION	QTY	FINISH

1 *REQUIRED AS DRAWN MARKED* Z16-FR015

6 October Monorail
Engineering Unit
Valid For Construction

GENERAL NOTES:

1. THE DIMENSIONS SHOWN ARE NOMINAL (IN MILLIMETERS), U.N.O.
2. WELD SIZESHALL BE AISC MINIMUM OF 6 mm UNLESS NOTED OTHERWISE.
3. ALL FIELD WELDS SHALL BE INSPECTED PER QUALITY ASSURANCE AND SPECIAL INSPECTIONS.

REFERENCE DRAWINGS

1	93M-BOA-NAT-LOT-04833
2	93M-BOA-NAT-LOT-09170
3	93M-BOA-NAT-LOT-01976
4	93M-BOA-NAT-LOT-20021
5	
6	
7	
8	
9	

6TH OF OCTOBER CITY RAIL TRANSIT MONORAIL

The Authority | Hill International Consultant | Main Contractor | Structural Designer

KEY PLAN:

SCALE: AS SHOWN | SHOP DRAWING | DATE: 08/29/2023

REV	DATE	DSG.	CHK.	APP.	AMENDMENTS	STATUS
B	08/29/2023	M.KH	M.KH	DR.M.M	ISSUED FOR INFORMATION	IFI
A	09/21/2022	M.KH	M.KH	DR.M.M	ISSUED FOR INFORMATION	IFI

DRAWING TITLE
6TH OF OCTOBER MONORAIL
SERVICE WALKWAYS
ZONE(1016)
Z16-FR015

Project Code	Rubric	Initiator	Lot	Ref	Number	Revision
93M	047	6ACC	60DEP	DWG	16023	B

Tekla structures

Same comments as
93M-0476-ACC-60DEP-DWG-16008-B.

REVIEWED WITH COMMENT
MONORAILS PROJECT

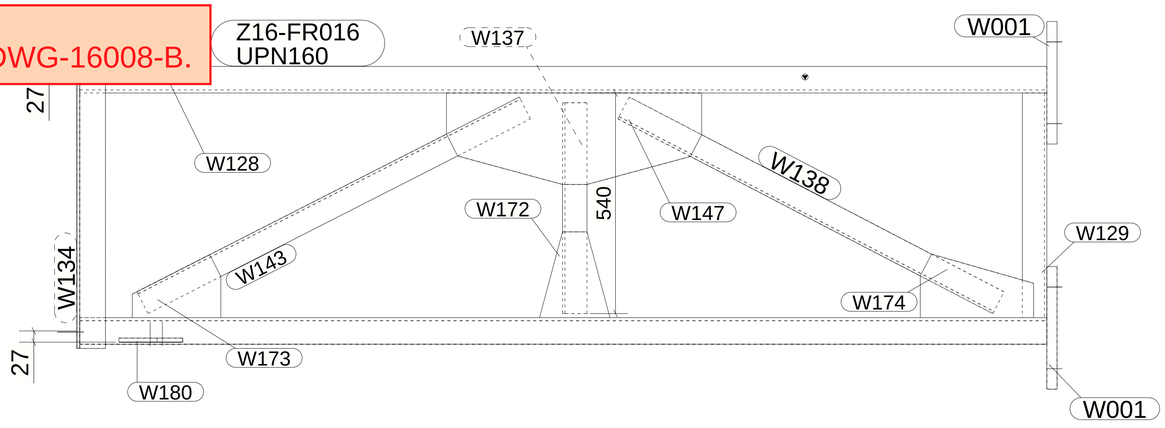

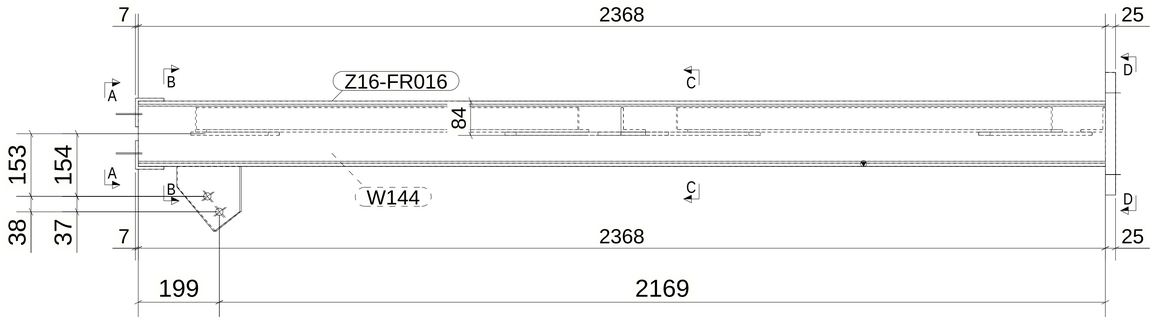

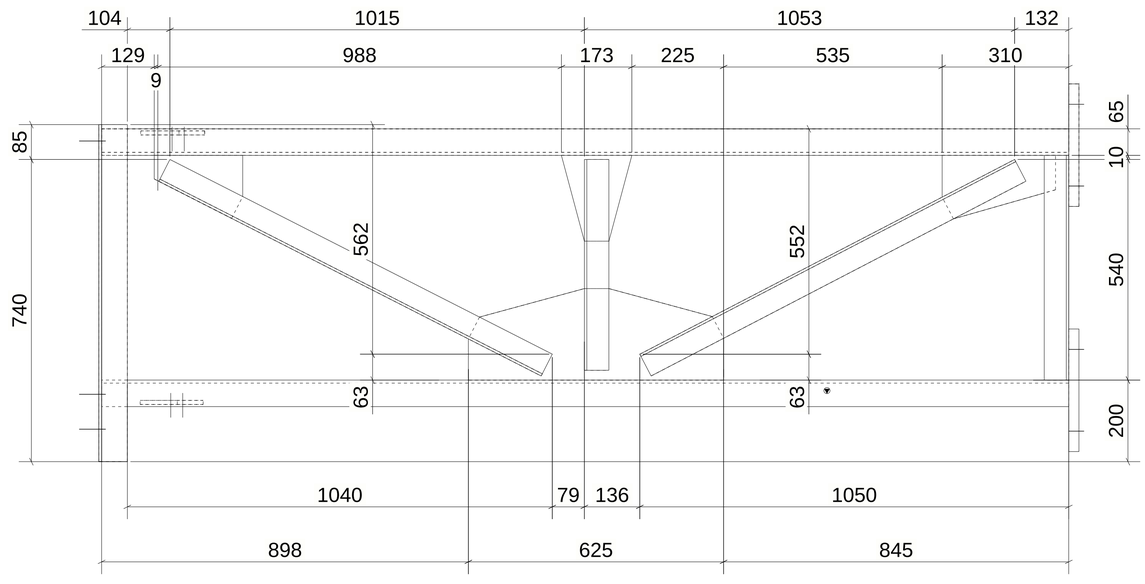

B - B

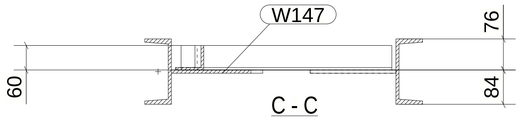

C - C

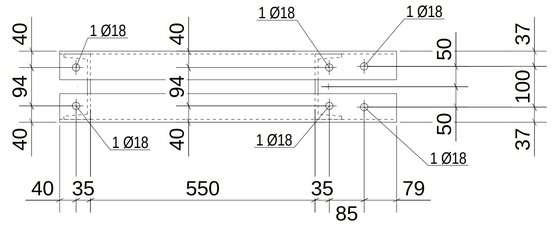

A - A

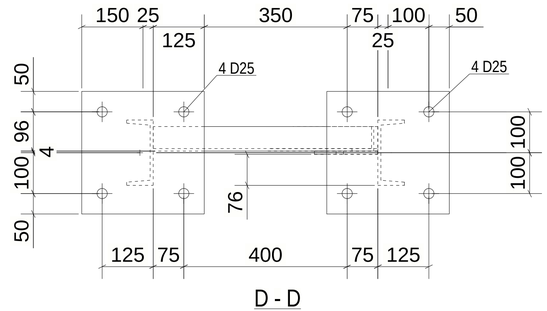

D - D

MATERIAL LIST FOR ASSEMBLY MK'D Z16-FR016						
Mark	Profile	GRADE	No.	Length	Area	Weight
Z16-FR016	UPN160	S235JR	1	2368	1.30	44.61
W001	PL25*300	S355JR	2	300	0.21	17.66
W128	PL10*154.1	S355JR	1	159	0.04	1.42
W129	L60*6	S235JR	1	550	0.13	2.95
W134	L70*7	S235JR	1	825	0.23	6.03
W137	L60*6	S235JR	1	516	0.13	2.77
W138	L60*6	S235JR	1	1034	0.25	5.55
W143	L60*6	S235JR	1	1051	0.25	5.64
W144	UPN160	S235JR	1	2368	1.30	44.61
W146	L70*7	S235JR	1	825	0.23	6.03
W147	PL8*223.9	S355JR	1	625	0.25	7.35
W172	PL8*166.7	S355JR	1	233	0.05	1.53
W173	PL8*154.2	S355JR	1	217	0.05	1.48
W174	PL8*155.4	S355JR	1	278	0.07	2.10
W180	PL10*156.5	S355JR	1	160	0.04	1.43
				Total	4.76	168.85

BOLT LIST:-

BOLT \ STUD	BOLT DESCRIPTION	QTY	FINISH

1 *REQUIRED AS DRAWN MARKED* Z16-FR016

GENERAL NOTES:

1. THE DIMENSIONS SHOWN ARE NOMINAL (IN MILLIMETERS), U.N.O.
2. WELD SIZESHALL BE AISC MINIMUM OF 6 mm UNLESS NOTED OTHERWISE.
3. ALL FIELD WELDS SHALL BE INSPECTED PER QUALITY ASSURANCE AND SPECIAL INSPECTIONS.

REFERENCE DRAWINGS

1	93M-BOA-NAT-LOT-04833
2	93M-BOA-NAT-LOT-09170
3	93M-BOA-NAT-LOT-01976
4	93M-BOA-NAT-LOT-20021
5	
6	
7	
8	
9	

6TH OF OCTOBER CITY RAIL TRANSIT MONORAIL

The Authority | Consultant: Hill International | Main Contractor: ORASCOM CONSTRUCTION / BOMBARDIER | Structural Designer: INNOVA TRANSPORTATION

6 October Monorail
Engineering Unit
Valid For Construction

KEY PLAN:

SCALE: AS SHOWN | SHOP DRAWING | DATE: 08/29/2023

REV	DATE	DSG.	CHK.	APP.	AMENDMENTS	STATUS
B	08/29/2023	M.KH	M.KH	DR.M.M	ISSUED FOR INFORMATION	IFI
A	09/21/2022	M.KH	M.KH	DR.M.M	ISSUED FOR INFORMATION	IFI

DRAWING TITLE
6TH OF OCTOBER MONORAIL
SERVICE WALKWAYS
ZONE(1016)
Z16-FR016

Project Code	Rubric	Initiator	Lot	Ref	Number	Revision
93M0476	ACC60	DEP	DWG		16024	B

Trekla structures

Approval is subject to approval of coordination package between multi-discipline.

REVIEWED WITH COMMENT
MONORAILS PROJECT

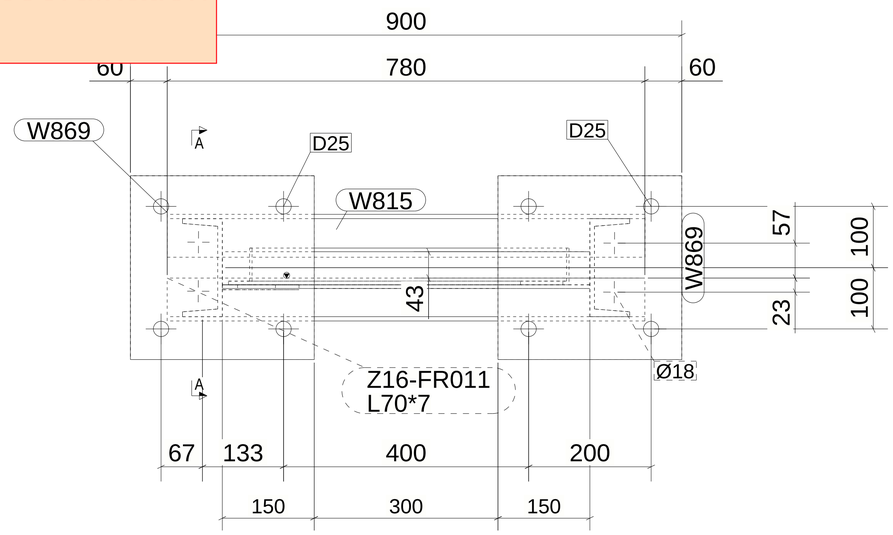

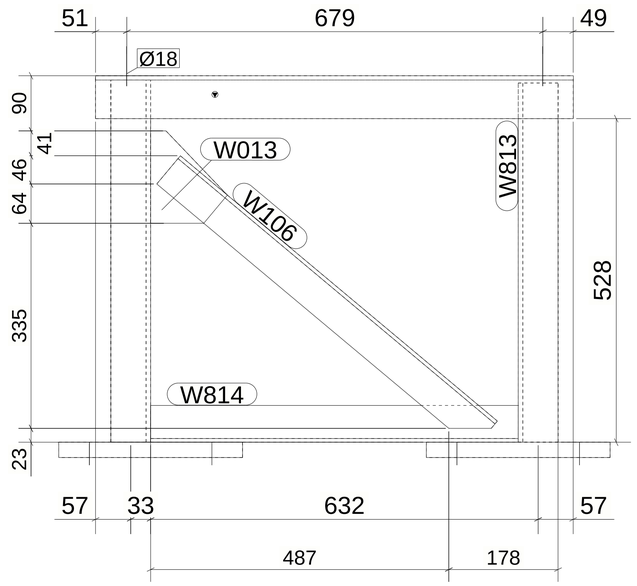

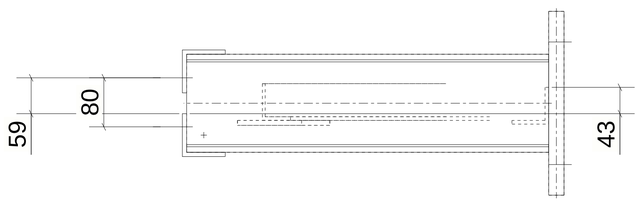

A-A

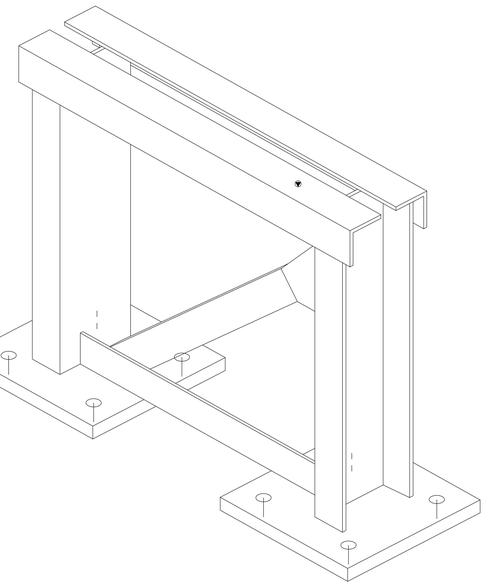

MATERIAL LIST FOR ASSEMBLY MK'D Z16-FR011

Mark	Profile	GRADE	No.	Length	Area	Weight
Z16-FR011	L70*7	S235JR	1	780	0.22	5.70
W013	PL8*125.2	S355JR	1	151	0.03	0.80
W106	L60*6	S235JR	1	675	0.16	3.57
W812	UPN160	S235JR	1	591	0.33	11.13
W813	UPN160	S235JR	1	586	0.32	11.04
W814	L60*6	S235JR	1	600	0.15	3.22
W815	L70*7	S235JR	1	780	0.22	5.70
W869	PL25*300	S355JR	2	300	0.21	17.66
				Total	1.84	76.49

BOLT LIST:-

BOLT \ STUD	BOLT DESCRIPTION	QTY	FINISH

2 *REQUIRED AS DRAWN MARKED* Z16-FR011

6 October: Monorail
Engineering Unit
Valid For Construction

GENERAL NOTES:

1. THE DIMENSIONS SHOWN ARE NOMINAL (IN MILLIMETERS), U.N.O.
2. WELD SIZESHALL BE AISC MINIMUM OF 6 mm UNLESS NOTED OTHERWISE.
3. ALL FIELD WELDS SHALL BE INSPECTED PER QUALITY ASSURANCE AND SPECIAL INSPECTIONS.

REFERENCE DRAWINGS

1	93M-BOA-NAT-LOT-04833
2	93M-BOA-NAT-LOT-09170
3	93M-BOA-NAT-LOT-01976
4	93M-BOA-NAT-LOT-20021
5	
6	
7	
8	
9	

6TH OF OCTOBER CITY RAIL TRANSIT MONORAIL

The Authority — Consultant — Main Contractor — Structural Designer

KEY PLAN:

SCALE: AS SHOWN | SHOP DRAWING | DATE: 08/29/2023

REV	DATE	DSG.	CHK.	APP.	AMENDMENTS	STATUS
B	08/29/2023	M.KH	M.KH	DR.M.M	ISSUED FOR INFORMATION	IFI
A	09/21/2022	M.KH	M.KH	DR.M.M	ISSUED FOR INFORMATION	IFI

DRAWING TITLE
6TH OF OCTOBER MONORAIL
SERVICE WALKWAYS
ZONE(1016)
Z16-FR011

Project Code	Rubric	Initiator	Lot	Ref	Number	Revision
93M	0476	ACC	60DEP	DWG	16025	B

Tekla structures

Same comments as
93M-0476-ACC-60DEP-DWG-16008-B.

REVIEWED WITH COMMENT
MONORAILS PROJECT

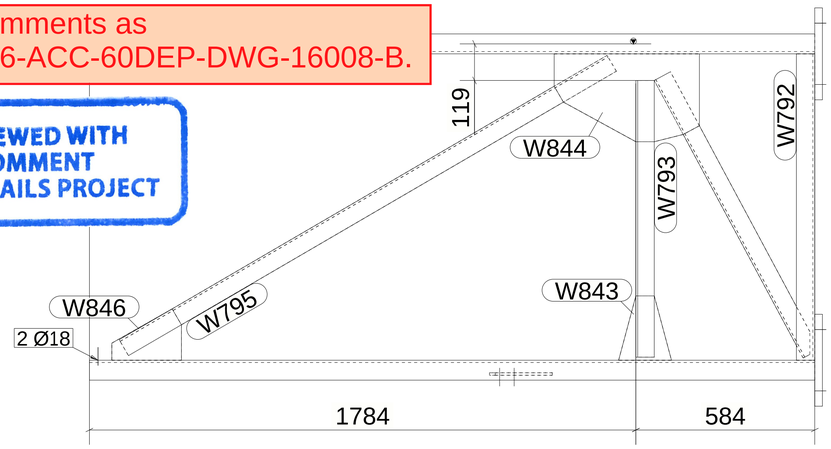

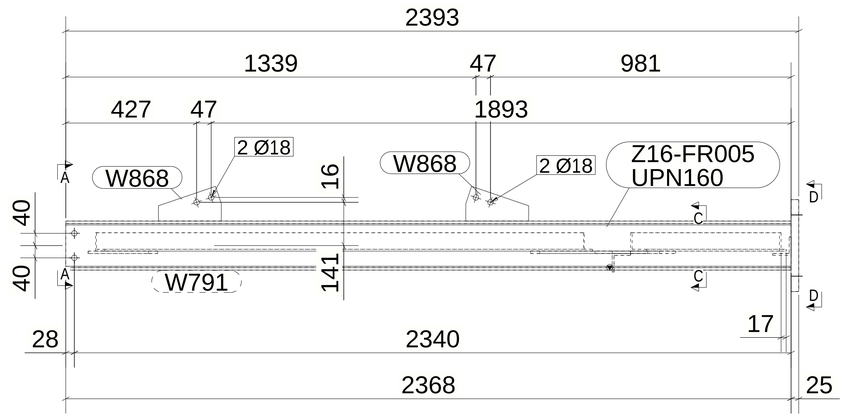

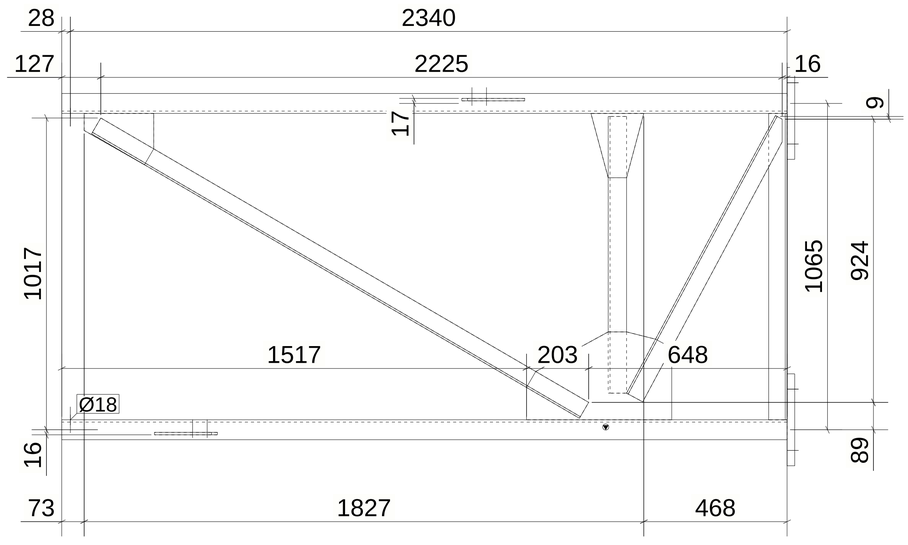

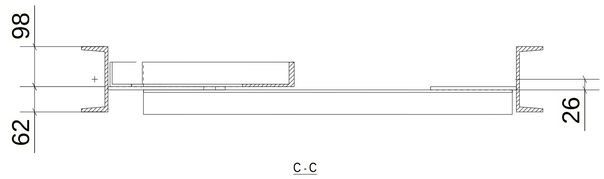

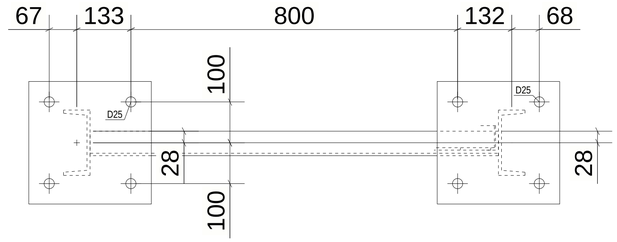

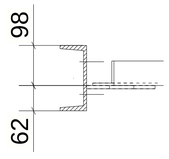

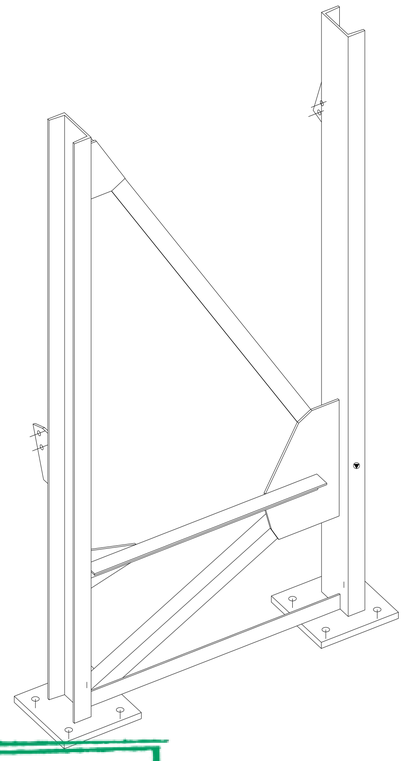

MATERIAL LIST FOR ASSEMBLY MK'DZ16-FR005

Mark	Profile	GRADE	No.	Length	Area	Weight
Z16-FR005	UPN160	S235JR	1	2368	1.30	44.61
W791	UPN160	S235JR	1	2368	1.30	44.61
W792	L60*6	S235JR	1	1000	0.24	5.37
W793	L60*6	S235JR	1	903	0.22	4.85
W794	L60*6	S235JR	1	1028	0.25	5.47
W795	L60*6	S235JR	1	1844	0.44	9.90
W843	PL8*166.7	S355JR	1	233	0.05	1.53
W844	PL8*286.9	S355JR	1	474	0.24	7.09
W846	PL8*167.5	S355JR	1	227	0.06	1.65
W868	PL8*113.4	S355JR	2	205	0.04	1.06
W869	PL25*300	S355JR	2	300	0.21	17.66
				Total	4.60	162.52

BOLT LIST:-

BOLT \ STUD	BOLT DESCRIPTION		QTY	FINISH
BOLT	B1N2W 16 X 50	A325M	4	

1 *REQUIRED AS DRAWN MARKED* Z16-FR005

GENERAL NOTES:

1. THE DIMENSIONS SHOWN ARE NOMINAL (IN MILLIMETERS), U.N.O.
2. WELD SIZESHALL BE AISC MINIMUM OF 6 mm UNLESS NOTED OTHERWISE.
3. ALL FIELD WELDS SHALL BE INSPECTED PER QUALITY ASSURANCE AND SPECIAL INSPECTIONS.

REFERENCE DRAWINGS

1	93M-BOA-NAT-LOT-04833
2	93M-BOA-NAT-LOT-09170
3	93M-BOA-NAT-LOT-01976
4	93M-BOA-NAT-LOT-20021
5	
6	
7	
8	
9	

6TH OF OCTOBER CITY RAIL TRANSIT MONORAIL

The Authority — Consultant — Main Contractor — Structural Designer

6 October Monorail
Engineering Unit
Valid For Construction

KEY PLAN:

SCALE: AS SHOWN | SHOP DRAWING | DATE: 08/29/2023

REV	DATE	DSG.	CHK.	APP.	AMENDMENTS	STATUS
B	08/29/2023	M.KH	M.KH	DR.M.M	ISSUED FOR INFORMATION	IFI
A	09/21/2022	M.KH	M.KH	DR.M.M	ISSUED FOR INFORMATION	IFI

DRAWING TITLE
6TH OF OCTOBER MONORAIL
SERVICE WALKWAYS
ZONE(1016)
Z16-FR005

Project Code	Rubric	Initiator	Lot	Ref	Number	Revision
93	M047	6ACC	60DE	PDWG	16026	B

Tekla structures

Same comments as
93M-0476-ACC-60DEP-DWG-16008-B.

REVIEWED WITH COMMENT
MONORAILS PROJECT

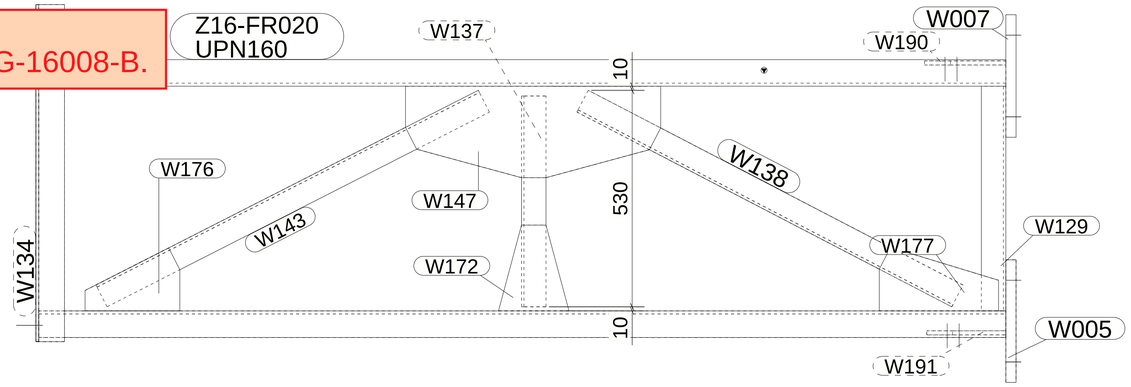

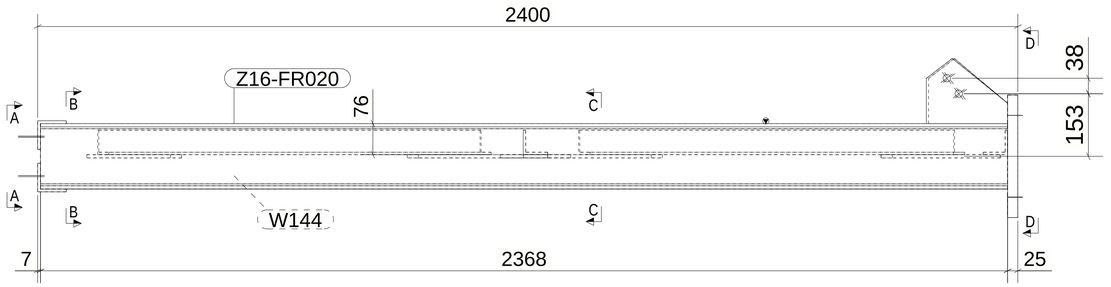

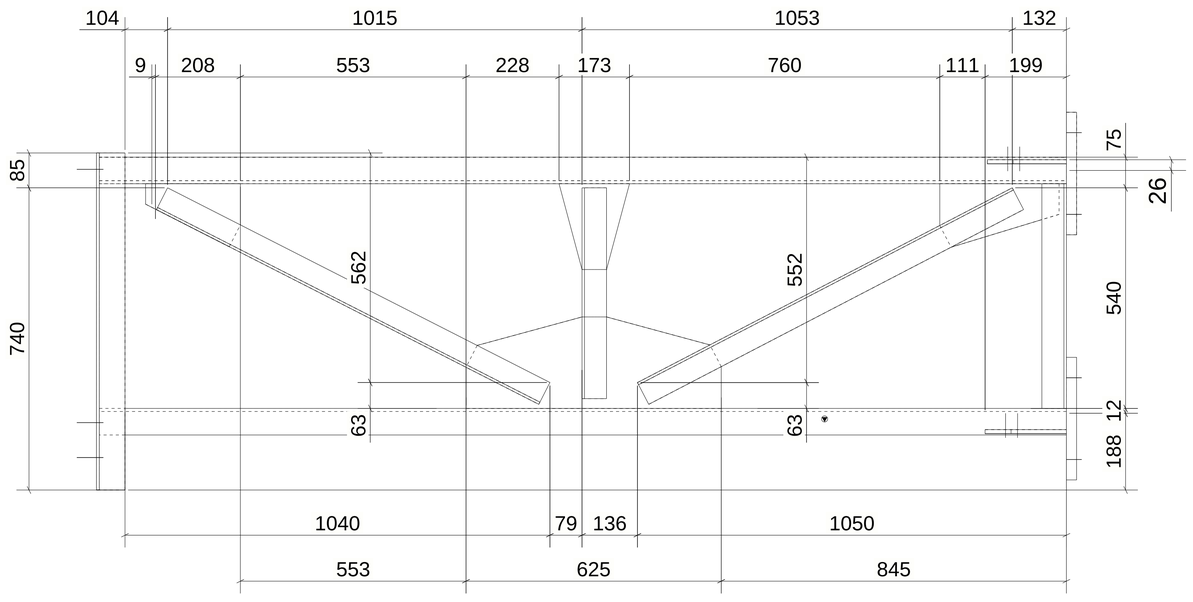

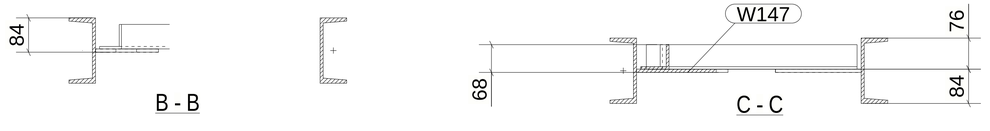

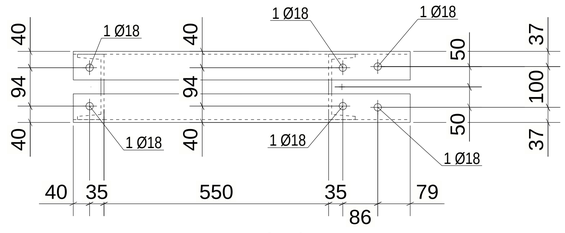

A - A

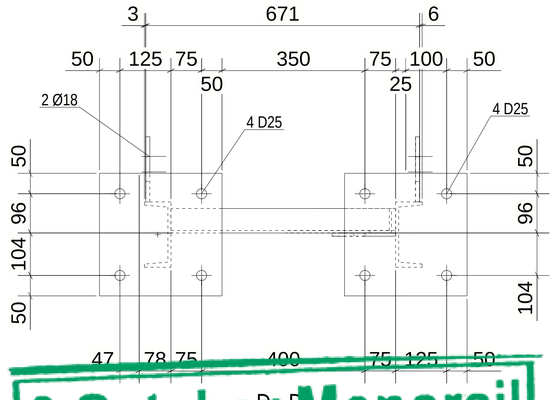

D - D

MATERIAL LIST FOR ASSEMBLY MK'D Z16-FR020						
Mark	Profile	GRADE	No.	Length	Area	Weight
Z16-FR020	UPN160	S235JR	1	2368	1.30	44.61
W005	PL25*300	S355JR	1	300	0.21	17.66
W007	PL25*300	S355JR	1	300	0.21	17.66
W129	L60*6	S235JR	1	550	0.13	2.95
W134	L70*7	S235JR	1	825	0.23	6.03
W137	L60*6	S235JR	1	516	0.13	2.77
W138	L60*6	S235JR	1	1034	0.25	5.55
W143	L60*6	S235JR	1	1051	0.25	5.64
W144	UPN160	S235JR	1	2368	1.30	44.61
W146	L70*7	S235JR	1	825	0.23	6.03
W147	PL8*223.9	S355JR	1	625	0.25	7.35
W172	PL8*166.7	S355JR	1	233	0.05	1.53
W176	PL8*154.2	S355JR	1	232	0.05	1.53
W177	PL8*155.4	S355JR	1	292	0.07	2.14
W190	PL10*159.6	S355JR	1	199	0.05	1.79
W191	PL10*159.4	S355JR	1	194	0.05	1.74
				Total	4.78	169.61

BOLT LIST:-

BOLT \ STUD	BOLT DESCRIPTION	QTY	FINISH

1 *REQUIRED AS DRAWN MARKED* Z16-FR020

GENERAL NOTES:

1. THE DIMENSIONS SHOWN ARE NOMINAL (IN MILLIMETERS), U.N.O.
2. WELD SIZESHALL BE AISC MINIMUM OF 6 mm UNLESS NOTED OTHERWISE.
3. ALL FIELD WELDS SHALL BE INSPECTED PER QUALITY ASSURANCE AND SPECIAL INSPECTIONS.

REFERENCE DRAWINGS

1	93M-BOA-NAT-LOT-04833
2	93M-BOA-NAT-LOT-09170
3	93M-BOA-NAT-LOT-01976
4	93M-BOA-NAT-LOT-20021
5	
6	
7	
8	
9	

6TH OF OCTOBER CITY RAIL TRANSIT MONORAIL

The Authority | Consultant: Hill International | Main Contractor: ORASCOM / BOMBARDIER | Structural Designer: INNOVA TRANSPORTATION

6 October Monorail
Engineering Unit
Valid For Construction

KEY PLAN:

SCALE: AS SHOWN | SHOP DRAWING | DATE: 08/29/2023

REV.	DATE	DSG.	CHK.	APP.	AMENDMENTS	STATUS
B	08/29/2023	M.KH	M.KH	DR.M.M	ISSUED FOR INFORMATION	IFI
A	09/21/2022	M.KH	M.KH	DR.M.M	ISSUED FOR INFORMATION	IFI

DRAWING TITLE
6TH OF OCTOBER MONORAIL
SERVICE WALKWAYS
ZONE(1016)
Z16-FR020

Project Code	Rubric	Initiator	Lot	Ref	Number	Revision
9 3 M 0 4 7 6	A C C	6 0 D E P	D W G		1 6 0 2 7	B

Tekla structures

Same comments as
93M-0476-ACC-60DEP-DWG-16008-B.

REVIEWED WITH COMMENT MONORAILS PROJECT

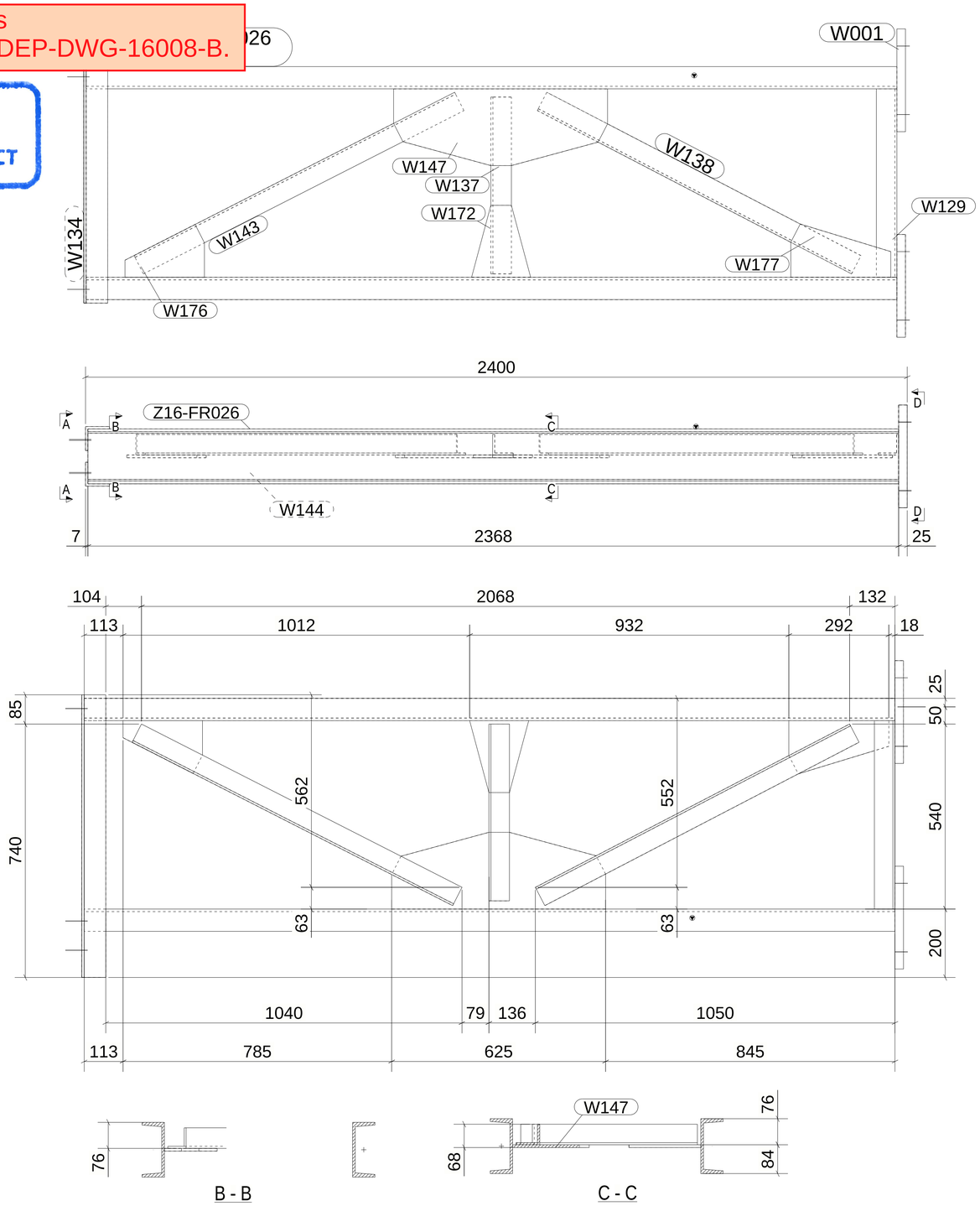

B - B

C - C

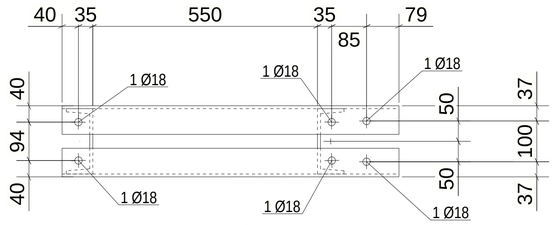

A - A

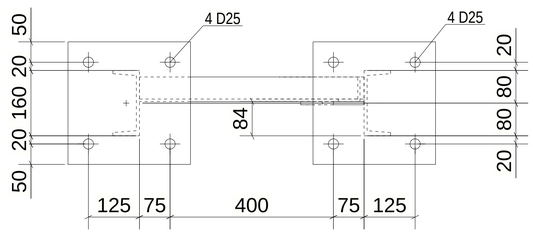

D - D

MATERIAL LIST FOR ASSEMBLY MK'D Z16-FR026

Mark	Profile	GRADE	No.	Length	Area	Weight
Z16-FR026	UPN160	S235JR	1	2368	1.30	44.61
W001	PL25*300	S355JR	2	300	0.21	17.66
W129	L60*6	S235JR	1	550	0.13	2.95
W134	L70*7	S235JR	1	825	0.23	6.03
W137	L60*6	S235JR	1	516	0.13	2.77
W138	L60*6	S235JR	1	1034	0.25	5.55
W143	L60*6	S235JR	1	1051	0.25	5.64
W144	UPN160	S235JR	1	2368	1.30	44.61
W146	L70*7	S235JR	1	825	0.23	6.03
W147	PL8*223.9	S355JR	1	625	0.25	7.35
W172	PL8*166.7	S355JR	1	233	0.05	1.53
W176	PL8*154.2	S355JR	1	232	0.05	1.53
W177	PL8*155.4	S355JR	1	292	0.07	2.14
				Total	4.68	166.08

BOLT LIST:-

BOLT \ STUD	BOLT DESCRIPTION	QTY	FINISH

29 *REQUIRED AS DRAWN MARKED* Z16-FR026

6 October Monorail
Engineering Unit
Valid For Construction

GENERAL NOTES:

1. THE DIMENSIONS SHOWN ARE NOMINAL (IN MILLIMETERS), U.N.O.
2. WELD SIZESHALL BE AISC MINIMUM OF 6 mm UNLESS NOTED OTHERWISE.
3. ALL FIELD WELDS SHALL BE INSPECTED PER QUALITY ASSURANCE AND SPECIAL INSPECTIONS.

REFERENCE DRAWINGS

1	93M-BOA-NAT-LOT-04833
2	93M-BOA-NAT-LOT-09170
3	93M-BOA-NAT-LOT-01976
4	93M-BOA-NAT-LOT-20021
5	
6	
7	
8	
9	

6TH OF OCTOBER CITY RAIL TRANSIT MONORAIL

The Authority | Hill International Consultant | ORASCOM BOMBARDIER Main Contractor | INNOVA TRANSPORTATION Structural Designer

KEY PLAN:

SCALE: AS SHOWN | SHOPDRAWING | DATE: 08/29/2023

REV	DATE	DSG.	CHK.	APP.	AMENDMENTS	STATUS
B	08/29/2023	M.KH	M.KH	DR.M.M	ISSUED FOR INFORMATION	IFI
A	09/21/2022	M.KH	M.KH	DR.M.M	ISSUED FOR INFORMATION	IFI

DRAWING TITLE
6TH OF OCTOBER MONORAIL
SERVICE WALKWAYS
ZONE(1016)
Z16-FR026

Project Code	Rubric	Initiator	Lot	Ref	Number	Revision
93M	0476	ACC	60DEP	DWG	16028	B

Tekla structures

Same comments as
93M-0476-ACC-60DEP-DWG-16008-B.

REVIEWED WITH COMMENT
MONORAILS PROJECT

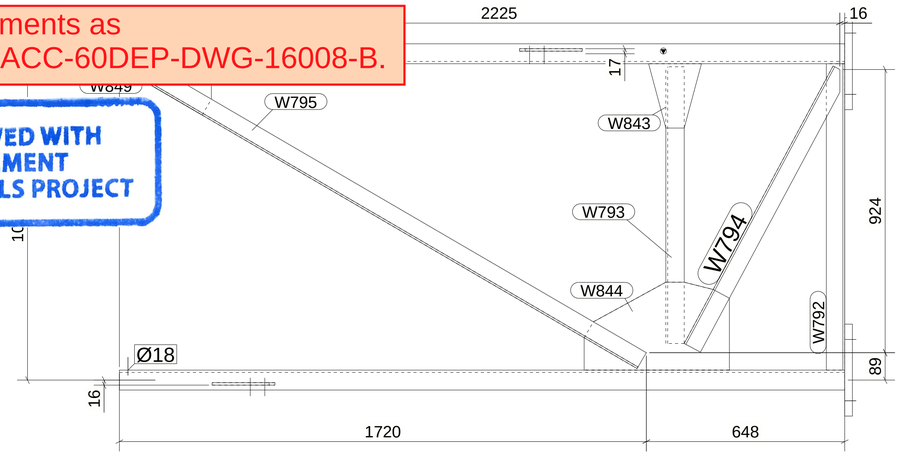

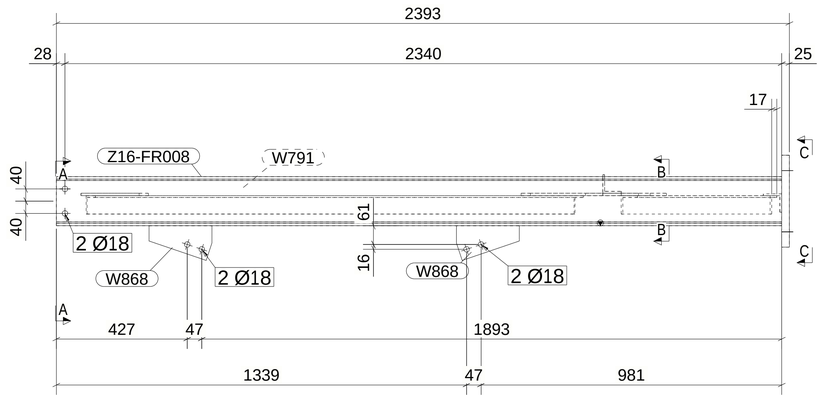

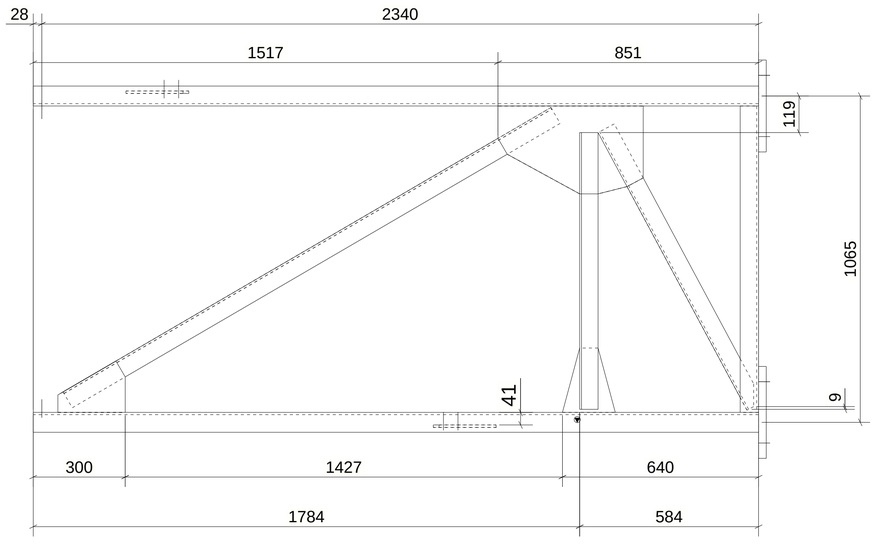

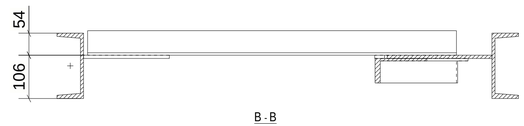

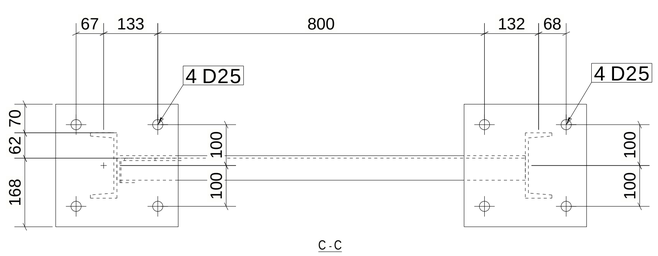

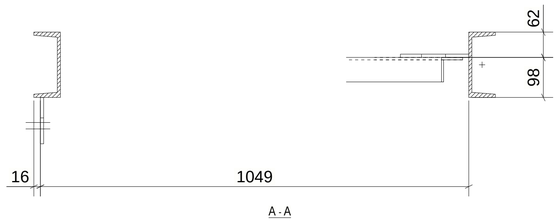

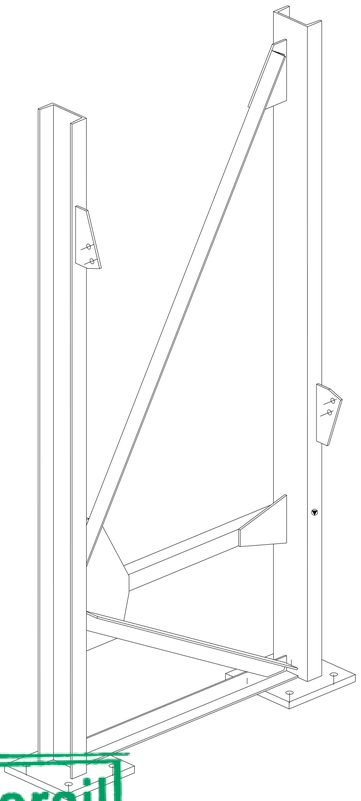

MATERIAL LIST FOR ASSEMBLY MK'D Z16-FR008						
Mark	Profile	GRADE	No.	Length	Area	Weight
Z16-FR008	UPN160	S235JR	1	2368	1.30	44.61
W791	UPN160	S235JR	1	2368	1.30	44.61
W792	L60*6	S235JR	1	1000	0.24	5.37
W793	L60*6	S235JR	1	903	0.22	4.85
W794	L60*6	S235JR	1	1028	0.25	5.47
W795	L60*6	S235JR	1	1844	0.44	9.90
W843	PL8*166.7	S355JR	1	233	0.05	1.53
W844	PL8*286.9	S355JR	1	474	0.24	7.09
W849	PL8*159.9	S355JR	1	248	0.06	1.61
W868	PL8*113.4	S355JR	2	205	0.04	1.06
W869	PL25*300	S355JR	2	300	0.21	17.66
				Total	4.60	162.48

BOLT LIST:-

BOLT \ STUD	BOLT DESCRIPTION		QTY	FINISH
BOLT	B1N2W 16 X 50	A325M	4	

1 *REQUIRED AS DRAWN MARKED* Z16-FR008

GENERAL NOTES:

1. THE DIMENSIONS SHOWN ARE NOMINAL (IN MILLIMETERS), U.N.O.
2. WELD SIZESHALL BE AISC MINIMUM OF 6 mm UNLESS NOTED OTHERWISE.
3. ALL FIELD WELDS SHALL BE INSPECTED PER QUALITY ASSURANCE AND SPECIAL INSPECTIONS.

REFERENCE DRAWINGS

1	93M-BOA-NAT-LOT-04833
2	93M-BOA-NAT-LOT-09170
3	93M-BOA-NAT-LOT-01976
4	93M-BOA-NAT-LOT-20021
5	
6	
7	
8	
9	

6TH OF OCTOBER CITY RAIL TRANSIT MONORAIL

The Authority | Consultant: Hill International | Main Contractor: ORASCOM CONSTRUCTION / BOMBARDIER | Structural Designer: INNOVA TRANSPORTATION

6 October Monorail
Engineering Unit
Valid For Construction

KEY PLAN:

SCALE: AS SHOWN | SHOP DRAWING | DATE: 08/29/2023

REV	DATE	DSG.	CHK.	APP.	AMENDMENTS	STATUS
B	09/29/2023	M.KH	M.KH	DR.M.M	ISSUED FOR INFORMATION	IFI
A	09/21/2022	M.KH	M.KH	DR.M.M	ISSUED FOR INFORMATION	IFI

DRAWING TITLE
6TH OF OCTOBER MONORAIL
SERVICE WALKWAYS
ZONE(1016)
Z16-FR008

Project Code	Rubric	Initiator	Lot	Ref	Number	Revision
93M	0476	ACC	60DEP	DWG	16029	B

Tekla structures

Same comments as
93M-0476-ACC-60DEP-DWG-16008-B.

REVIEWED WITH COMMENT
MONORAILS PROJECT

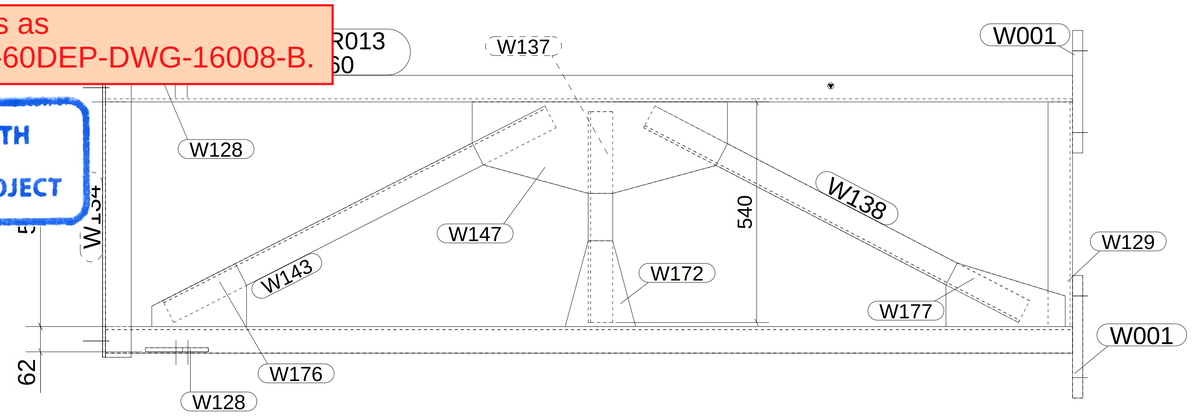

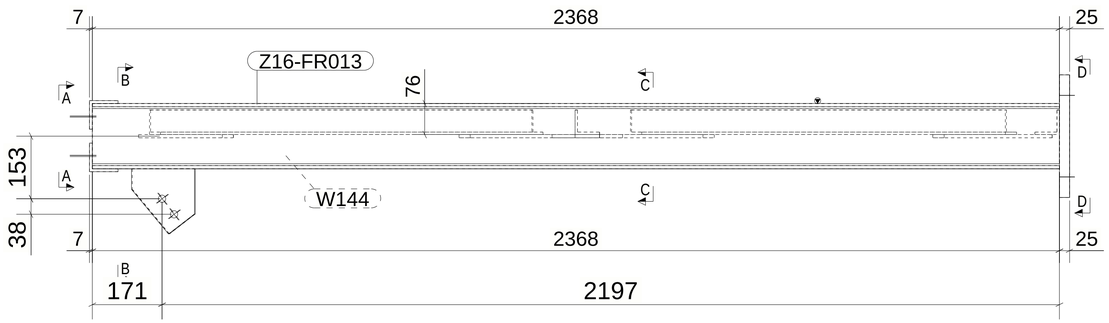

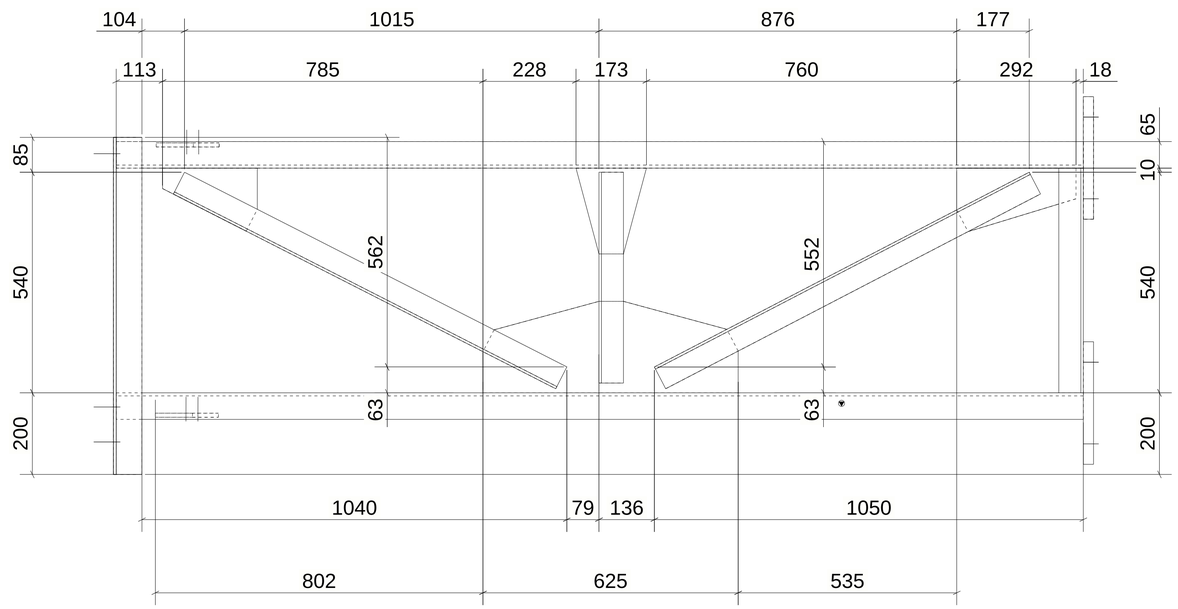

MATERIAL LIST FOR ASSEMBLY MK'D Z16-FR013

Mark	Profile	GRADE	No.	Length	Area	Weight
Z16-FR013	UPN160	S235JR	1	2368	1.30	44.61
W001	PL25*300	S355JR	2	300	0.21	17.66
W128	PL10*154.2	S355JR	2	159	0.04	1.42
W129	L60*6	S235JR	1	550	0.13	2.95
W134	L70*7	S235JR	1	825	0.23	6.03
W137	L60*6	S235JR	1	516	0.13	2.77
W138	L60*6	S235JR	1	1034	0.25	5.55
W143	L60*6	S235JR	1	1051	0.25	5.64
W144	UPN160	S235JR	1	2368	1.30	44.61
W146	L70*7	S235JR	1	825	0.23	6.03
W147	PL8*223.9	S355JR	1	625	0.25	7.35
W172	PL8*166.7	S355JR	1	233	0.05	1.53
W176	PL8*154.2	S355JR	1	232	0.05	1.53
W177	PL8*155.4	S355JR	1	292	0.07	2.14
				Total	4.76	168.92

BOLT LIST:-

BOLT \ STUD	BOLT DESCRIPTION	QTY	FINISH

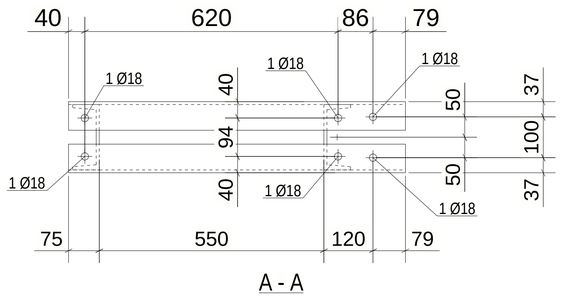

A - A

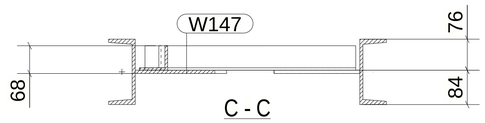

C - C

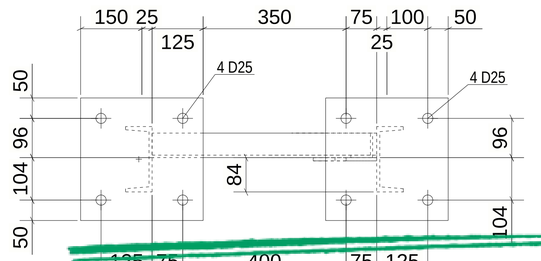

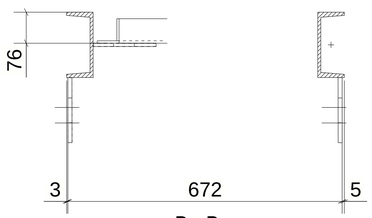

B - B

1 *REQUIRED AS DRAWN MARKED* Z16-FR013

6 October Monorail
Engineering Unit
Valid For Construction

GENERAL NOTES:

1. THE DIMENSIONS SHOWN ARE NOMINAL (IN MILLIMETERS), U.N.O.
2. WELD SIZESHALL BE AISC MINIMUM OF 6 mm UNLESS NOTED OTHERWISE.
3. ALL FIELD WELDS SHALL BE INSPECTED PER QUALITY ASSURANCE AND SPECIAL INSPECTIONS.

REFERENCE DRAWINGS

1	93M-BOA-NAT-LOT-04833
2	93M-BOA-NAT-LOT-09170
3	93M-BOA-NAT-LOT-01976
4	93M-BOA-NAT-LOT-20021
5	
6	
7	
8	
9	

6TH OF OCTOBER CITY RAIL TRANSIT MONORAIL

The Authority | Consultant: Hill International | Main Contractor: Orascom Construction / Ch. Dish Commures / Bombardier | Structural Designer: Innova Transportation

KEY PLAN:

SCALE: AS SHOWN | DRAWING: SHOP | DATE: 08/29/2023

REV	DATE	DSG.	CHK.	APP.	AMENDMENTS	STATUS
B	08/29/2023	M.KH	M.KH	DR.M.M	ISSUED FOR INFORMATION	IFI
A	09/21/2022	M.KH	M.KH	DR.M.M	ISSUED FOR INFORMATION	IFI

DRAWING TITLE
6TH OF OCTOBER MONORAIL
SERVICE WALKWAYS
ZONE(1016)
Z16-FR013

Project Code	Rubric	Initiator	Lot	Ref	Number	Revision
9 3 M	0 4 7 6	A C C	6 0 D E P	D W G	1 6 0 3 0	B

Tekla structures

Same comments as 93M-0476-ACC-60DEP-DWG-16008-B.

REVIEWED WITH COMMENT MONORAILS PROJECT

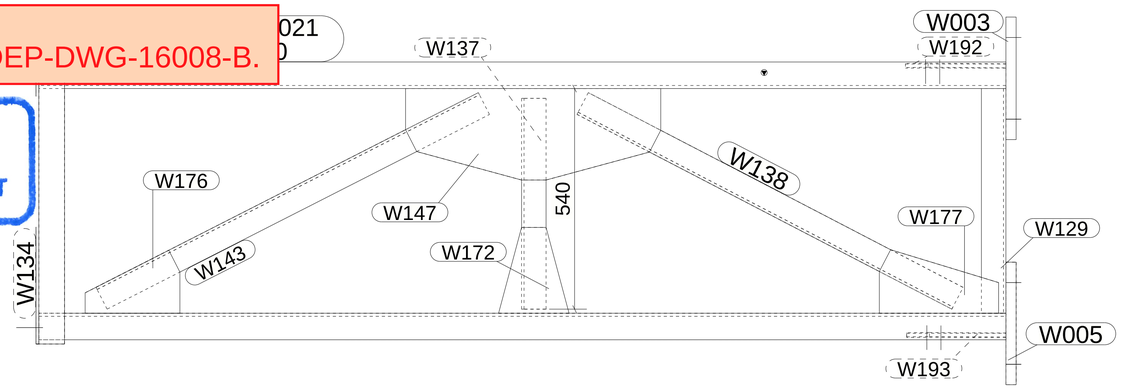

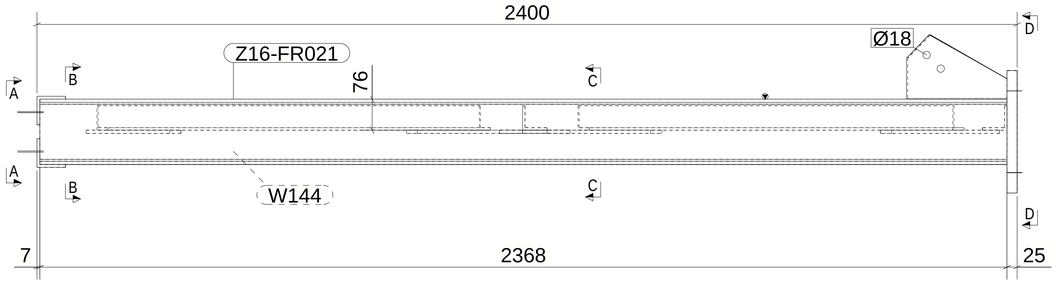

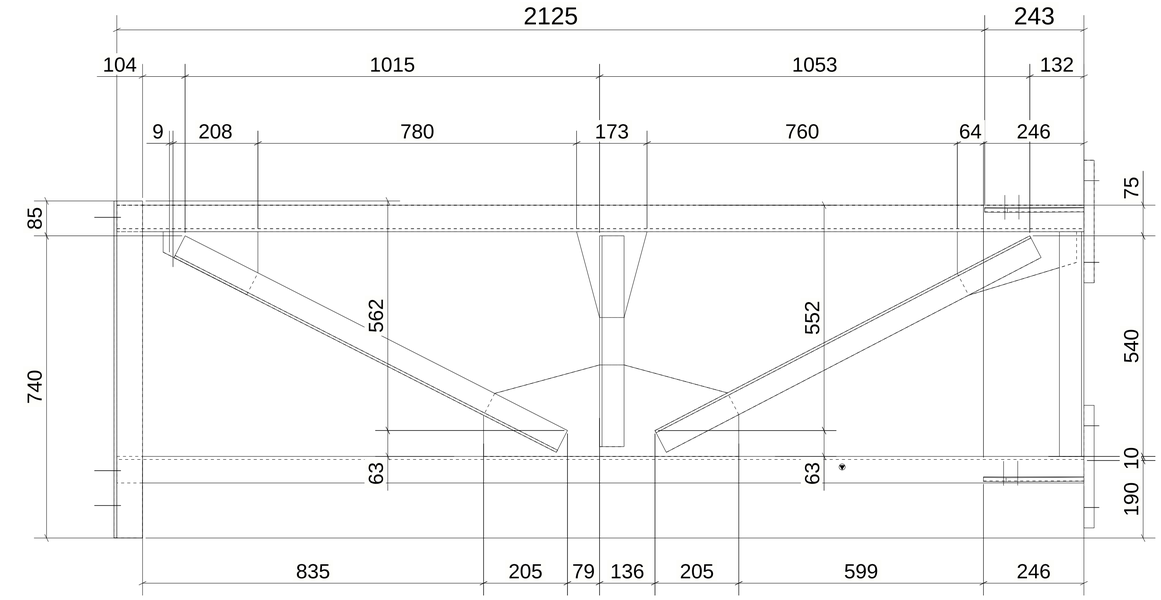

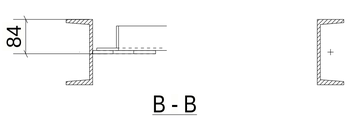

B - B

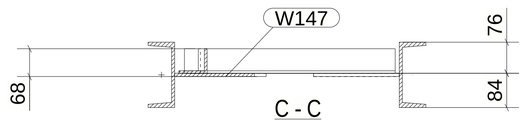

C - C

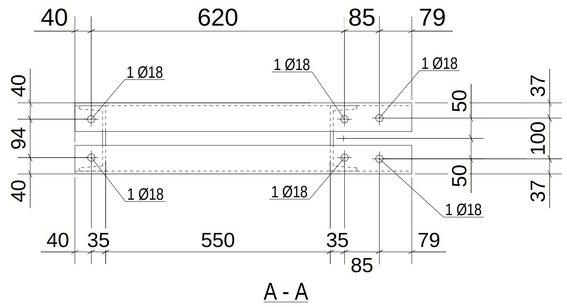

A - A

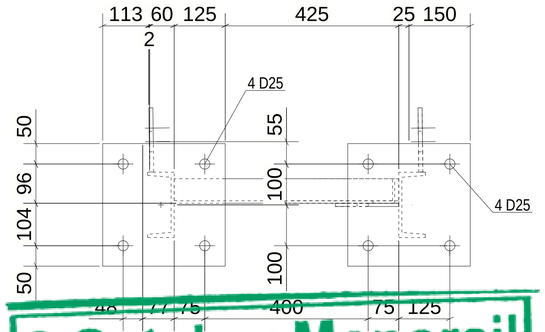

D - D

MATERIAL LIST FOR ASSEMBLY MK'D Z16-FR021						
Mark	Profile	GRADE	No.	Length	Area	Weight
Z16-FR021	UPN160	S235JR	1	2368	1.30	44.61
W003	PL25*300	S355JR	1	300	0.21	17.66
W005	PL25*300	S355JR	1	300	0.21	17.66
W129	L60*6	S235JR	1	550	0.13	2.95
W134	L70*7	S235JR	1	825	0.23	6.03
W137	L60*6	S235JR	1	516	0.13	2.77
W138	L60*6	S235JR	1	1034	0.25	5.55
W143	L60*6	S235JR	1	1051	0.25	5.64
W144	UPN160	S235JR	1	2368	1.30	44.61
W146	L70*7	S235JR	1	825	0.23	6.03
W147	PL8*223.9	S355JR	1	625	0.25	7.35
W172	PL8*166.7	S355JR	1	233	0.05	1.53
W176	PL8*154.2	S355JR	1	232	0.05	1.53
W177	PL8*155.4	S355JR	1	292	0.07	2.14
W192	PL10*157.1	S355JR	1	246	0.06	2.10
W193	PL10*157.2	S355JR	1	243	0.06	2.08
				Total	4.80	170.27

BOLT LIST:-

BOLT \ STUD	BOLT DESCRIPTION	QTY	FINISH

1 *REQUIRED AS DRAWN MARKED* Z16-FR021

6 October Monorail
Engineering Unit
Valid For Construction

GENERAL NOTES:

1. THE DIMENSIONS SHOWN ARE NOMINAL (IN MILLIMETERS), U.N.O.
2. WELD SIZESHALL BE AISC MINIMUM OF 6 mm UNLESS NOTED OTHERWISE.
3. ALL FIELD WELDS SHALL BE INSPECTED PER QUALITY ASSURANCE AND SPECIAL INSPECTIONS.

REFERENCE DRAWINGS

1	93M-BOA-NAT-LOT-04833
2	93M-BOA-NAT-LOT-09170
3	93M-BOA-NAT-LOT-01976
4	93M-BOA-NAT-LOT-20021
5	
6	
7	
8	
9	

6TH OF OCTOBER CITY RAIL TRANSIT MONORAIL

The Authority | Consultant: Hill International | Main Contractor: ORASCOM CONSTRUCTION / BOMBARDIER | Structural Designer: INNOVA TRANSPORTATION

KEY PLAN:

SCALE: AS SHOWN | SHOP DRAWING | DATE: 08/29/2023

REV	DATE	DSG.	CHK.	APP.	AMENDMENTS	STATUS
B	09/29/2023	M.KH	M.KH	DR.M.M	ISSUED FOR INFORMATION	IFI
A	09/21/2022	M.KH	M.KH	DR.M.M	ISSUED FOR INFORMATION	IFI

DRAWING TITLE
6TH OF OCTOBER MONORAIL
SERVICE WALKWAYS
ZONE(1016)
Z16-FR021

Project Code	Rubric	Initiator	Lot	Ref	Number	Revision
93M	0476	ACC	60DEP	DWG	16031	B

Tekla structures

1-Same comments as 93M-0476-ACC-60DEP-DWG-16008-B.

REVIEWED WITH COMMENT MONORAILS PROJECT

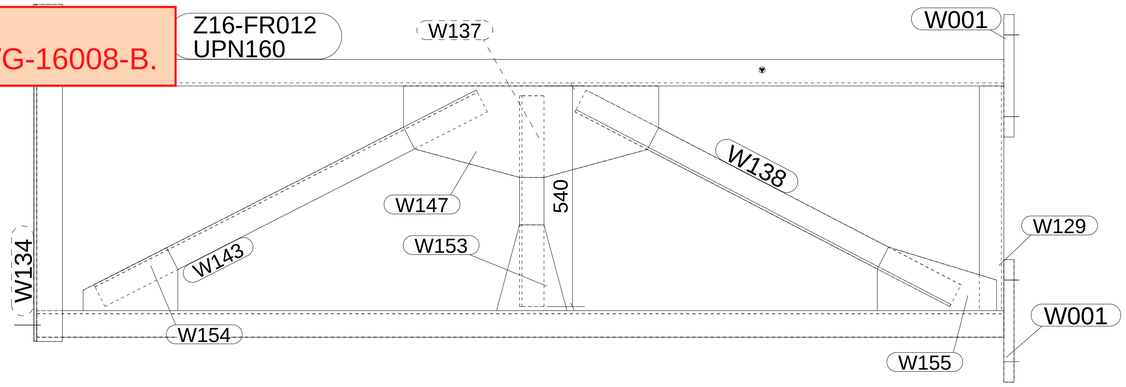

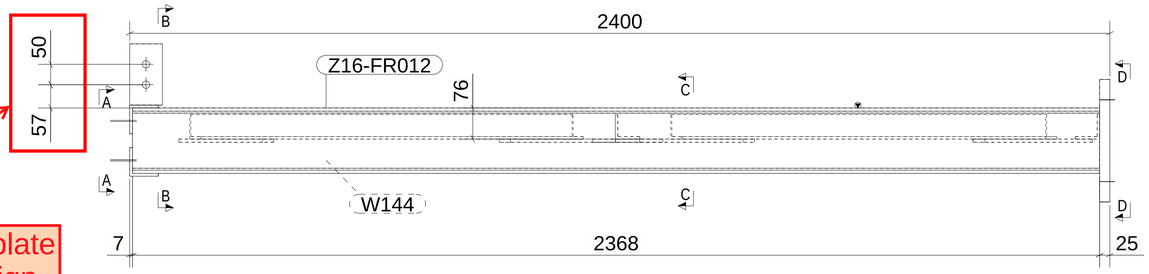

2-Distance of fixing the plate is not matching with design drawings as shown below.

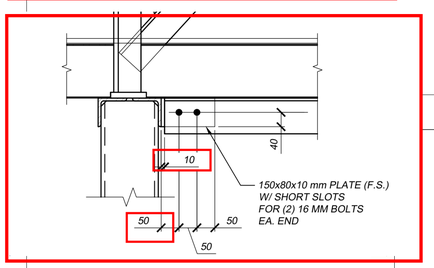

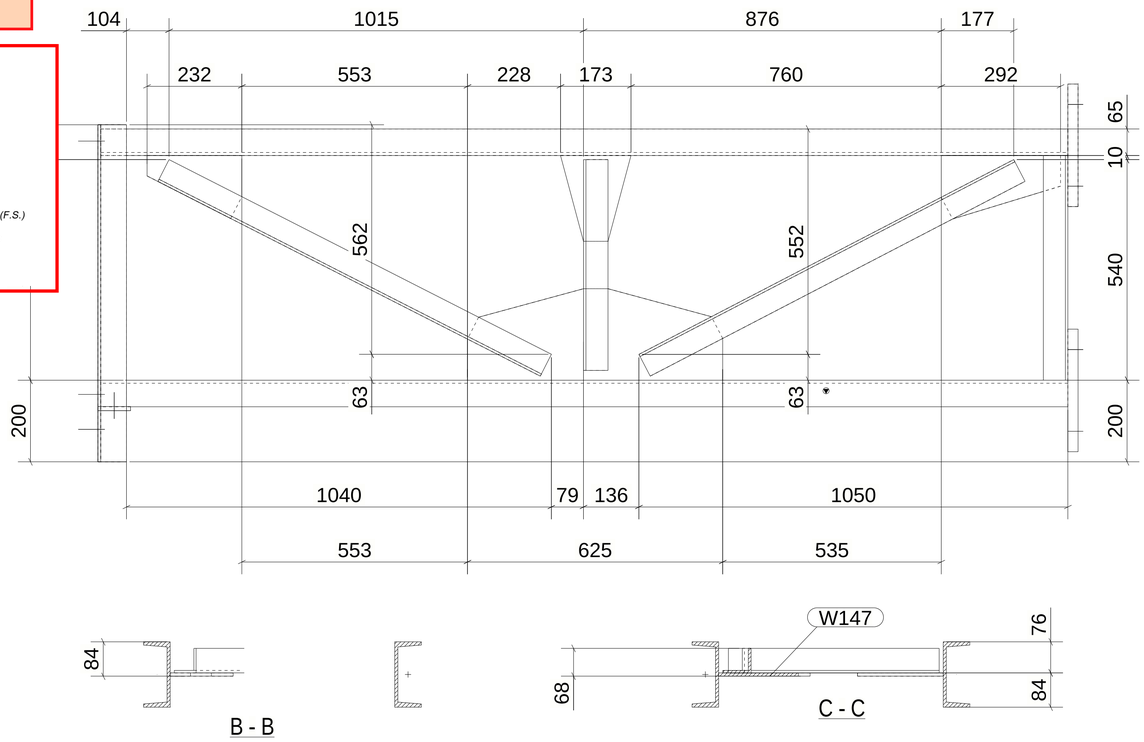

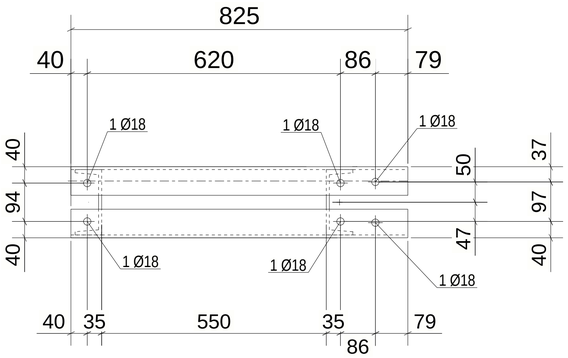

A - A

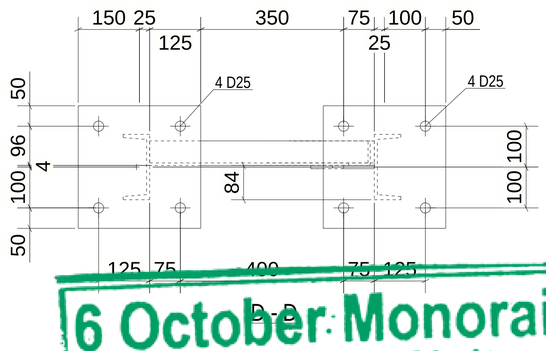

D - D

MATERIAL LIST FOR ASSEMBLY MK'D Z16-FR012						
Mark	Profile	GRADE	No.	Length	Area	Weight
Z16-FR012	UPN160	S235JR	1	2368	1.30	44.61
W001	PL25*300	S355JR	2	300	0.21	17.66
W120	PL10*80	S355JR	1	150	0.03	0.94
W129	L60*6	S235JR	1	550	0.13	2.95
W134	L70*7	S235JR	1	825	0.23	6.03
W137	L60*6	S235JR	1	516	0.13	2.77
W138	L60*6	S235JR	1	1034	0.25	5.55
W143	L60*6	S235JR	1	1051	0.25	5.64
W144	UPN160	S235JR	1	2368	1.30	44.61
W146	L70*7	S235JR	1	825	0.23	6.03
W147	PL8*223.9	S355JR	1	625	0.25	7.35
W153	PL8*166.7	S355JR	1	233	0.05	1.53
W154	PL8*154.2	S355JR	1	232	0.05	1.53
W155	PL8*155.4	S355JR	1	292	0.07	2.14
				Total	4.71	167.02

BOLT LIST:-

BOLT \ STUD	BOLT DESCRIPTION	QTY	FINISH

1 *REQUIRED AS DRAWN MARKED* Z16-FR012

6 October Monorail
Engineering Unit
Valid For Construction

GENERAL NOTES:

1. THE DIMENSIONS SHOWN ARE NOMINAL (IN MILLIMETERS), U.N.O.
2. WELD SIZESHALL BE AISC MINIMUM OF 6 mm UNLESS NOTED OTHERWISE.
3. ALL FIELD WELDS SHALL BE INSPECTED PER QUALITY ASSURANCE AND SPECIAL INSPECTIONS.

REFERENCE DRAWINGS

1	93M-BOA-NAT-LOT-04833
2	93M-BOA-NAT-LOT-09170
3	93M-BOA-NAT-LOT-01976
4	93M-BOA-NAT-LOT-20021
5	
6	
7	
8	
9	

6TH OF OCTOBER CITY RAIL TRANSIT MONORAIL

The Authority | Consultant: Hill International | Main Contractor: ORASCOM CONSTRUCTION, BOMBARDIER | Structural Designer: INNOVA TRANSPORTATION

KEY PLAN:

SCALE: AS SHOWN | SHOP DRAWING | DATE: 08/29/2023

DRAWING TITLE
6TH OF OCTOBER MONORAIL
SERVICE WALKWAYS
ZONE(1016)
Z16-FR012

REV	DATE	DSG.	CHK.	APP.	AMENDMENTS	STATUS
B	08/29/2023	M.KH	M.KH	DR.M.M	ISSUED FOR INFORMATION	IFI
A	09/21/2022	M.KH	M.KH	DR.M.M	ISSUED FOR INFORMATION	IFI

Project Code	Rubric	Initiator	Lot	Ref	Number	Revision
93M	0476	ACC	60DEP	DWG	16032	B

Tekla structures

Same comments as
93M-0476-ACC-60DEP-DWG-16032-B.

REVIEWED WITH COMMENT
MONORAILS PROJECT

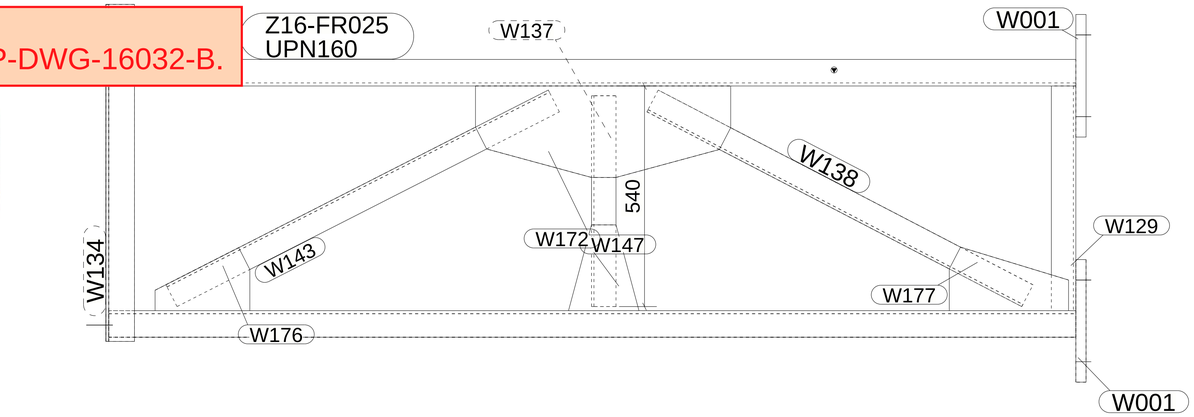

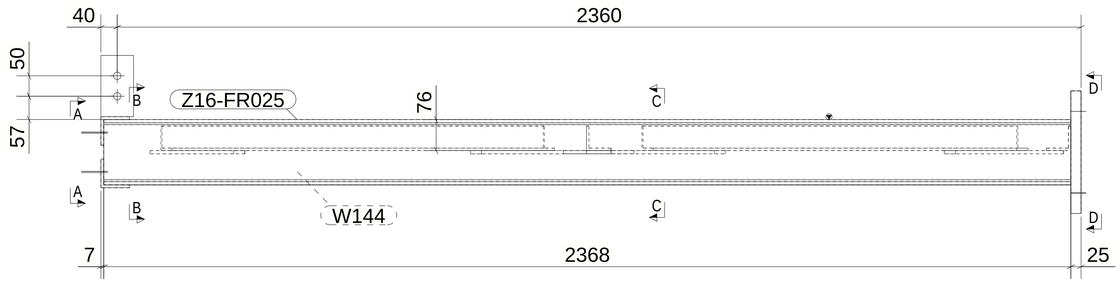

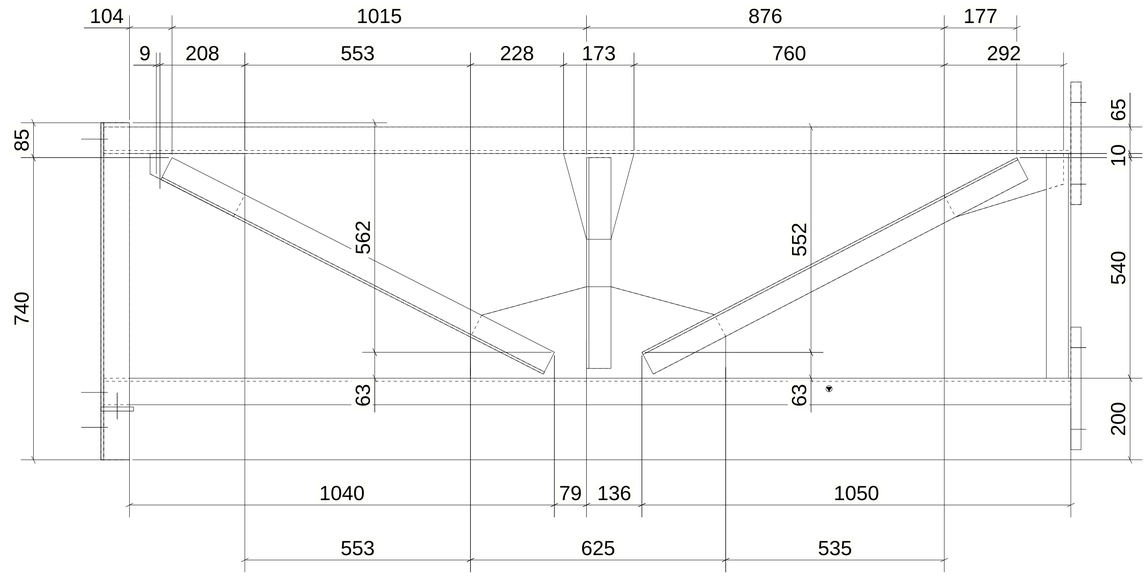

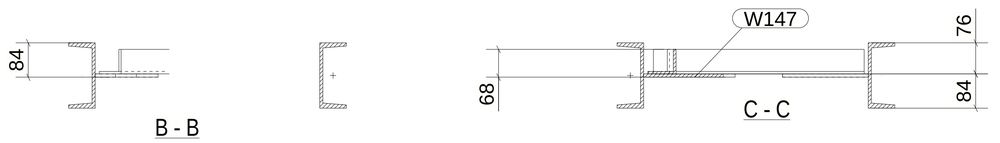

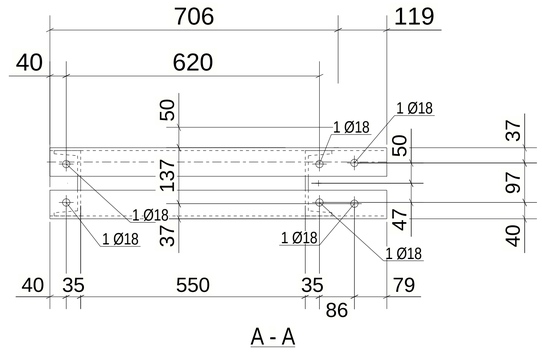

A - A

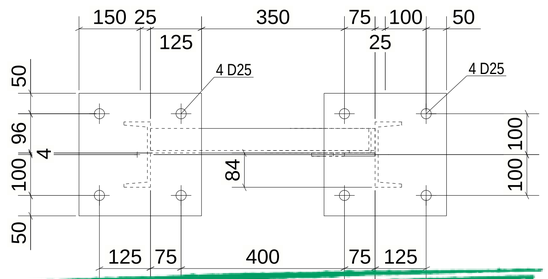

D - D

MATERIAL LIST FOR ASSEMBLY MK'D Z16-FR025						
Mark	Profile	GRADE	No.	Length	Area	Weight
Z16-FR025	UPN160	S235JR	1	2368	1.30	44.61
W001	PL25*300	S355JR	2	300	0.21	17.66
W120	PL10*80	S355JR	1	150	0.03	0.94
W129	L60*6	S235JR	1	550	0.13	2.95
W134	L70*7	S235JR	1	825	0.23	6.03
W137	L60*6	S235JR	1	516	0.13	2.77
W138	L60*6	S235JR	1	1034	0.25	5.55
W143	L60*6	S235JR	1	1051	0.25	5.64
W144	UPN160	S235JR	1	2368	1.30	44.61
W146	L70*7	S235JR	1	825	0.23	6.03
W147	PL8*223.9	S355JR	1	625	0.25	7.35
W172	PL8*166.7	S355JR	1	233	0.05	1.53
W176	PL8*154.2	S355JR	1	232	0.05	1.53
W177	PL8*155.4	S355JR	1	292	0.07	2.14
				Total	4.71	167.02

BOLT LIST:-

BOLT \ STUD	BOLT DESCRIPTION	QTY	FINISH

1 *REQUIRED AS DRAWN MARKED* Z16-FR025

6 October Monorail
Engineering Unit
Valid For Construction

GENERAL NOTES:

1. THE DIMENSIONS SHOWN ARE NOMINAL (IN MILLIMETERS), U.N.O.
2. WELD SIZESHALL BE AISC MINIMUM OF 6 mm UNLESS NOTED OTHERWISE.
3. ALL FIELD WELDS SHALL BE INSPECTED PER QUALITY ASSURANCE AND SPECIAL INSPECTIONS.

REFERENCE DRAWINGS

1	93M-BOA-NAT-LOT-04833
2	93M-BOA-NAT-LOT-09170
3	93M-BOA-NAT-LOT-01976
4	93M-BOA-NAT-LOT-20021
5	
6	
7	
8	
9	

6TH OF OCTOBER CITY RAIL TRANSIT MONORAIL

The Authority | Consultant: Hill International | Main Contractor: ORASCOM CONSTRUCTION / BOMBARDIER | Structural Designer: INNOVA TRANSPORTATION

KEY PLAN:

SCALE: AS SHOWN | SHOP DRAWING | DATE: 08/29/2023

DRAWING TITLE
6TH OF OCTOBER MONORAIL
SERVICE WALKWAYS
ZONE(1016)
Z16-FR025

REV	DATE	DSG.	CHK.	APP.	AMENDMENTS	STATUS
B	08/29/2023	M.KH	M.KH	DR.M.M	ISSUED FOR INFORMATION	IFI
A	09/21/2022	M.KH	M.KH	DR.M.M	ISSUED FOR INFORMATION	IFI

Project Code	Rubric	Initiator	Lot	Ref	Number	Revision
93M	0476	ACC	60DEP	DWG	16033	B

Tekla structures

Same comments as
93M-0476-ACC-60DEP-DWG-16013-B.

REVIEWED WITH COMMENT
MONORAILS PROJECT

MATERIAL LIST FOR ASSEMBLY MK'DZ16-PO003

Mark	Profile	GRADE	No.	Length	Area	Weight
Z16-PO003	L70*7	S235JR	1	1180	0.33	8.62
W271	PL16*100	S355JR	1	160	0.04	2.01
W445	PL10*25	S355JR	1	98	0.01	0.19
W460	PIPE2SCH40	S235JR	1	25	0.01	0.14
				Total	0.39	10.96

BOLT LIST:-

BOLT \ STUD	BOLT DESCRIPTION		QTY	FINISH
BOLT	B1N2W16 X 55	A325M	2	

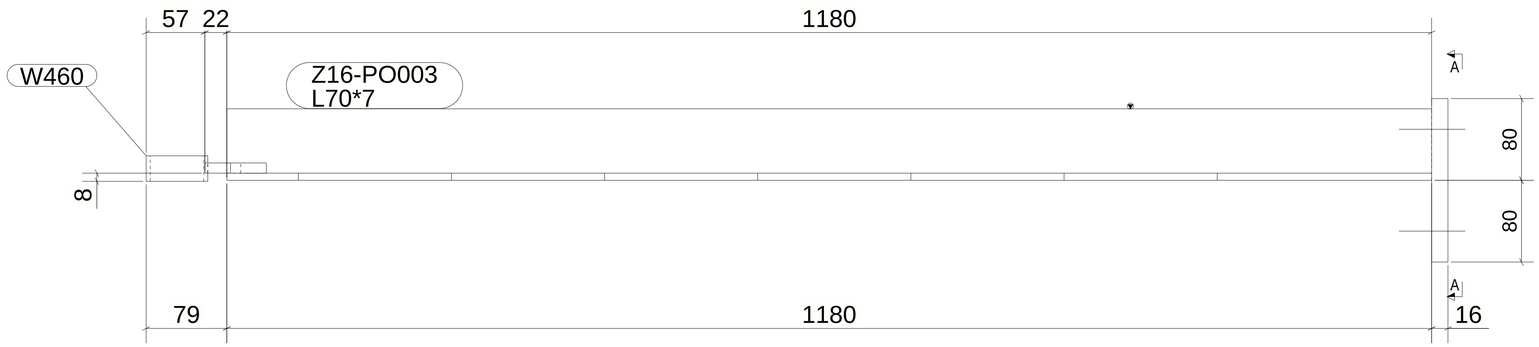

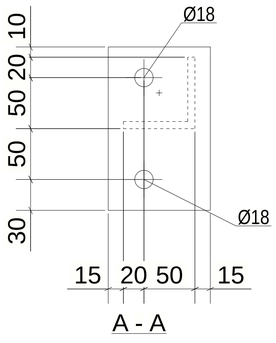

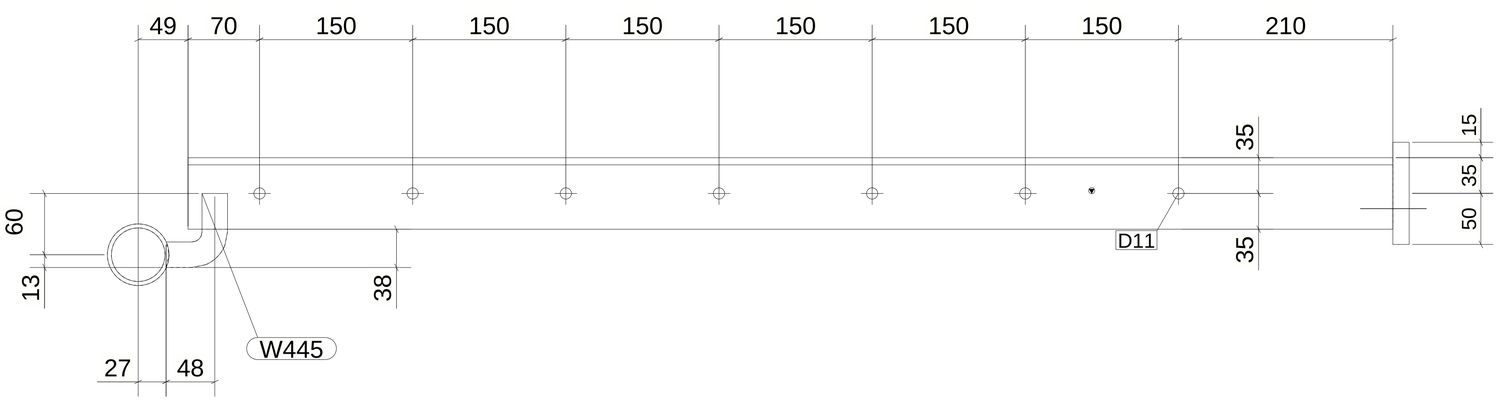

17 *REQUIRED AS DRAWN MARKED* Z16-PO003

6 October Monorail
Engineering Unit
Valid For Construction

GENERAL NOTES:

1. THE DIMENSIONS SHOWN ARE NOMINAL (IN MILLIMETERS), U.N.O.
2. WELD SIZESHALL BE AISC MINIMUM OF 6 mm UNLESS NOTED OTHERWISE.
3. ALL FIELD WELDS SHALL BE INSPECTED PER QUALITY ASSURANCE AND SPECIAL INSPECTIONS.

REFERENCE DRAWINGS

1	93M-BOA-NAT-LOT-04833
2	93M-BOA-NAT-LOT-09170
3	93M-BOA-NAT-LOT-01976
4	93M-BOA-NAT-LOT-20021
5	
6	
7	
8	
9	

6TH OF OCTOBER CITY RAIL TRANSIT MONORAIL

The Authority | Hill International Consultant | Main Contractor | Structural Designer

KEY PLAN:

SCALE: AS SHOWN | SHOPDRAWING | DATE: 08/29/2023

REV	DATE	DSG.	CHK.	APP.	AMENDMENTS	STATUS
B	08/29/2023	M.KH	M.KH	DR.M.M	ISSUED FOR INFORMATION	IFI
A	09/21/2022	M.KH	M.KH	DR.M.M	ISSUED FOR INFORMATION	IFI

DRAWING TITLE
6TH OF OCTOBER MONORAIL
SERVICE WALKWAYS
ZONE(1016)
Z16-PO003

Project Code	Rubric	Initiator	Lot	Ref	Number	Revision
93	M047	6ACC	60DEP	DWG	160334	B

Tekla structures

Same comments as
93M-0476-ACC-60DEP-DWG-16032-B.

REVIEWED WITH COMMENT
MONORAILS PROJECT

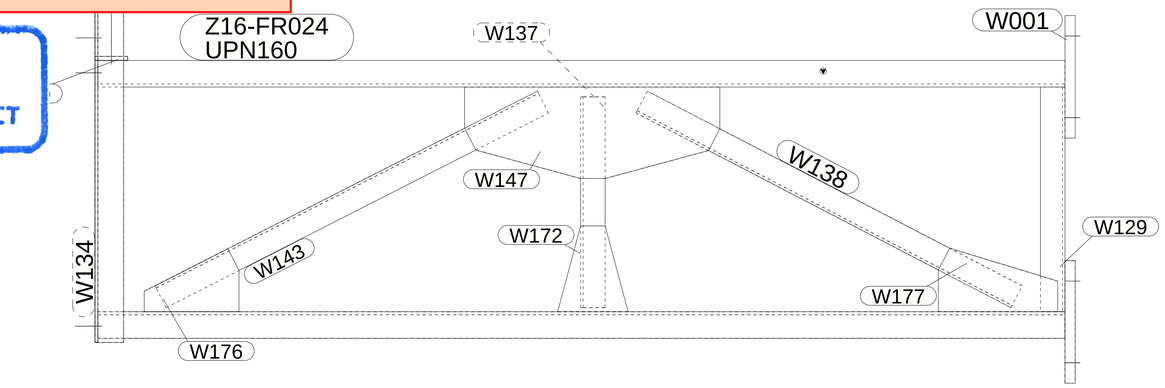

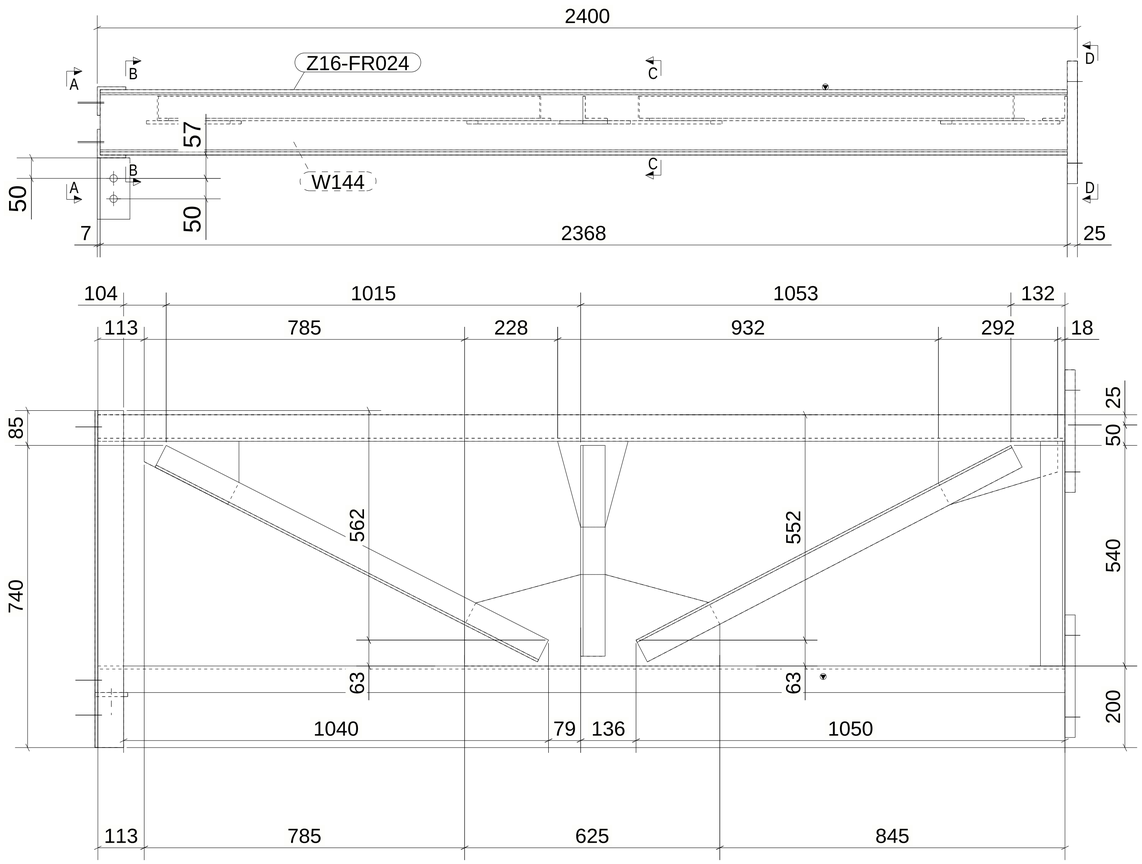

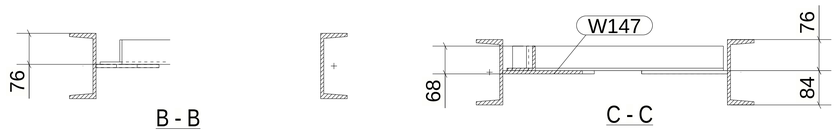

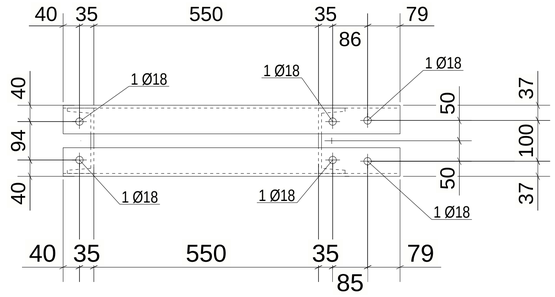

A - A

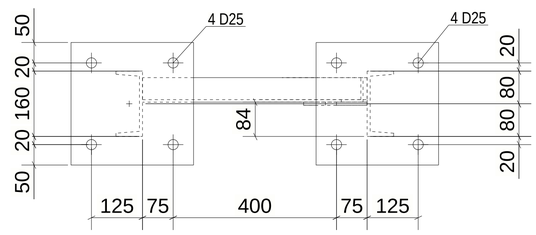

D - D

MATERIAL LIST FOR ASSEMBLY MK'D Z16-FR024

Mark	Profile	GRADE	No.	Length	Area	Weight
Z16-FR024	UPN160	S235JR	1	2368	1.30	44.61
W001	PL25*300	S355JR	2	300	0.21	17.66
W120	PL10*80	S355JR	1	150	0.03	0.94
W129	L60*6	S235JR	1	550	0.13	2.95
W134	L70*7	S235JR	1	825	0.23	6.03
W137	L60*6	S235JR	1	516	0.13	2.77
W138	L60*6	S235JR	1	1034	0.25	5.55
W143	L60*6	S235JR	1	1051	0.25	5.64
W144	UPN160	S235JR	1	2368	1.30	44.61
W146	L70*7	S235JR	1	825	0.23	6.03
W147	PL8*223.9	S355JR	1	625	0.25	7.35
W172	PL8*166.7	S355JR	1	233	0.05	1.53
W176	PL8*154.2	S355JR	1	232	0.05	1.53
W177	PL8*155.4	S355JR	1	292	0.07	2.14
				Total	4.71	167.02

BOLT LIST:-

BOLT \ STUD	BOLT DESCRIPTION	QTY	FINISH

2 *REQUIRED AS DRAWN MARKED* Z16-FR024

GENERAL NOTES:

1. THE DIMENSIONS SHOWN ARE NOMINAL (IN MILLIMETERS), U.N.O.
2. WELD SIZESHALL BE AISC MINIMUM OF 6 mm UNLESS NOTED OTHERWISE.
3. ALL FIELD WELDS SHALL BE INSPECTED PER QUALITY ASSURANCE AND SPECIAL INSPECTIONS.

REFERENCE DRAWINGS

1	93M-BOA-NAT-LOT-04833
2	93M-BOA-NAT-LOT-09170
3	93M-BOA-NAT-LOT-01976
4	93M-BOA-NAT-LOT-20021
5	
6	
7	
8	
9	

6TH OF OCTOBER CITY RAIL TRANSIT MONORAIL

The Authority | Consultant: Hill International | Main Contractor: ORASCOM CONSTRUCTION, BOMBARDIER | Structural Designer: INNOVA TRANSPORTATION

6 October Monorail
Engineering Unit
Valid For Construction

KEY PLAN:

SCALE: AS SHOWN | SHOP DRAWING | DATE: 08/29/2023

DRAWING TITLE
6TH OF OCTOBER MONORAIL
SERVICE WALKWAYS
ZONE(1016)
Z16-FR024

REV	DATE	DSG.	CHK.	APP.	AMENDMENTS	STATUS
B	08/29/2023	M.KH	M.KH	DR.M.M	ISSUED FOR INFORMATION	IFI
A	09/21/2022	M.KH	M.KH	DR.M.M	ISSUED FOR INFORMATION	IFI

Project Code	Rubric	Initiator	Lot	Ref	Number	Revision
93M	047	6ACC	60DEP	DWG	16035	B

Tekla structures

Approval is subject to approval of coordination package between multi-discipline.

REVIEWED WITH COMMENT
MONORAILS PROJECT

MATERIAL LIST FOR ASSEMBLY MK'D Z16-BR014

Mark	Profile	GRADE	No.	Length	Area	Weight
Z16-BR014	L80*8	S235JR	1	3461	1.11	33.03
				Total	1.11	33.03

BOLT LIST:-

BOLT \ STUD	BOLT DESCRIPTION	QTY	FINISH
BOLT	B1N2W16 X 50 A325M	4	

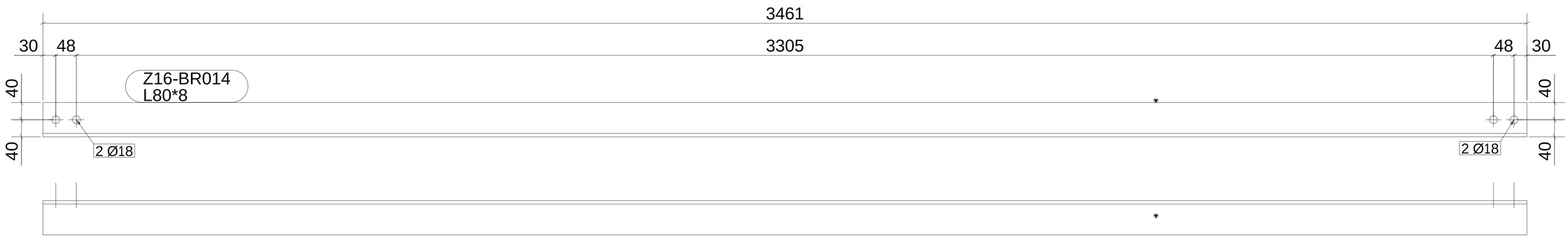

1 *REQUIRED AS DRAWN MARKED* Z16-BR014

GENERAL NOTES:

1. THE DIMENSIONS SHOWN ARE NOMINAL (IN MILLIMETERS), U.N.O.
2. WELD SIZESHALL BE AISC MINIMUM OF 6 mm UNLESS NOTED OTHERWISE.
3. ALL FIELD WELDS SHALL BE INSPECTED PER QUALITY ASSURANCE AND SPECIAL INSPECTIONS.

REFERENCE DRAWINGS

1	93M-BOA-NAT-LOT-04833
2	93M-BOA-NAT-LOT-09170
3	93M-BOA-NAT-LOT-01976
4	93M-BOA-NAT-LOT-20021
5	
6	
7	
8	
9	

6TH OF OCTOBER CITY RAIL TRANSIT MONORAIL

The Authority — Consultant: Hill International — Main Contractor — Structural Designer

6 October Monorail
Engineering Unit
Valid For Construction

KEY PLAN:

SCALE: AS SHOWN | SHOP DRAWING | DATE: 08/29/2023

REV	DATE	DSG.	CHK.	APP.	AMENDMENTS	STATUS
B	08/29/2023	M.KH	M.OH	DR.M.M	ISSUED FOR INFORMATION	IFI
A	09/21/2022	M.KH	M.OH	DR.M.M	ISSUED FOR INFORMATION	IFI

DRAWING TITLE
6TH OF OCTOBER MONORAIL
SERVICE WALKWAYS
ZONE(1016)
Z16-BR014

Project Code	Rubric	Initiator	Lot	Ref	Number	Revision
93	M047	6 ACC	60 DEP	DWG	1603	B

Trekla structures

Approval is subject to approval of coordination package between multi-discipline.

REVIEWED WITH COMMENT
MONORAILS PROJECT

MATERIAL LIST FOR ASSEMBLY MK'D Z16-BR016

Mark	Profile	GRADE	No.	Length	Area	Weight
Z16-BR016	L80*8	S235JR	1	2837	0.91	27.08
				Total	0.91	27.08

BOLT LIST:-

BOLT \ STUD	BOLT DESCRIPTION	QTY	FINISH
BOLT	B1N2W16 X 50 A325M	4	

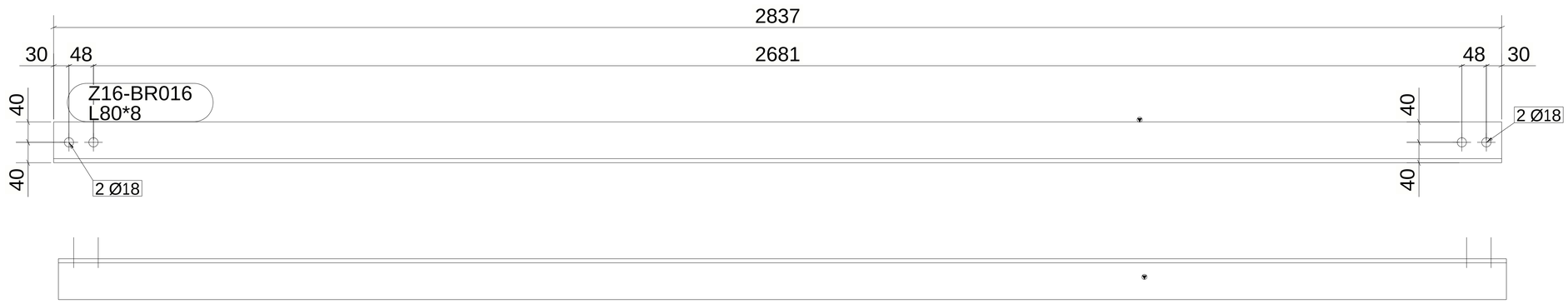

1 *REQUIRED AS DRAWN MARKED* Z16-BR016

6 October Monorail
Engineering Unit
Valid For Construction

GENERAL NOTES:

1. THE DIMENSIONS SHOWN ARE NOMINAL (IN MILLIMETERS), U.N.O.
2. WELD SIZESHALL BE AISC MINIMUM OF 6 mm UNLESS NOTED OTHERWISE.
3. ALL FIELD WELDS SHALL BE INSPECTED PER QUALITY ASSURANCE AND SPECIAL INSPECTIONS.

REFERENCE DRAWINGS

1	93M-BOA-NAT-LOT-04833
2	93M-BOA-NAT-LOT-09170
3	93M-BOA-NAT-LOT-01976
4	93M-BOA-NAT-LOT-20021
5	
6	
7	
8	
9	

6TH OF OCTOBER CITY RAIL TRANSIT MONORAIL

The Authority | Hill International Consultant | Main Contractor | Structural Designer

KEY PLAN:

SCALE: AS SHOWN | SHOP DRAWING | DATE: 08/29/2023

REV	DATE	DSG.	CHK.	APP.	AMENDMENTS	STATUS
B	08/29/2023	M.KH	M.KH	DR.M.M	ISSUED FOR INFORMATION	IFI
A	09/21/2022	M.KH	M.KH	DR.M.M	ISSUED FOR INFORMATION	IFI

DRAWING TITLE
6TH OF OCTOBER MONORAIL
SERVICE WALKWAYS
ZONE(1016)
Z16-BR016

Project Code	Rubric	Initiator	Lot	Ref	Number	Revision
93M	047	6ACC	60DE	PDWG	16037	B

Tekla structures

This assembly is not found in the GA drawings.

REVIEWED WITH COMMENT
MONORAILS PROJECT

MATERIAL LIST FOR ASSEMBLY MK'D Z16-BR028

Mark	Profile	GRADE	No.	Length	Area	Weight
Z16-BR028	L80*8	S235JR	1	1424	0.46	13.59
				Total	0.46	13.59

BOLT LIST:-

BOLT \ STUD	BOLT DESCRIPTION	QTY	FINISH
BOLT	B1N2W16 X 45 A325M	1	
BOLT	B1N2W16 X 50 A325M	1	

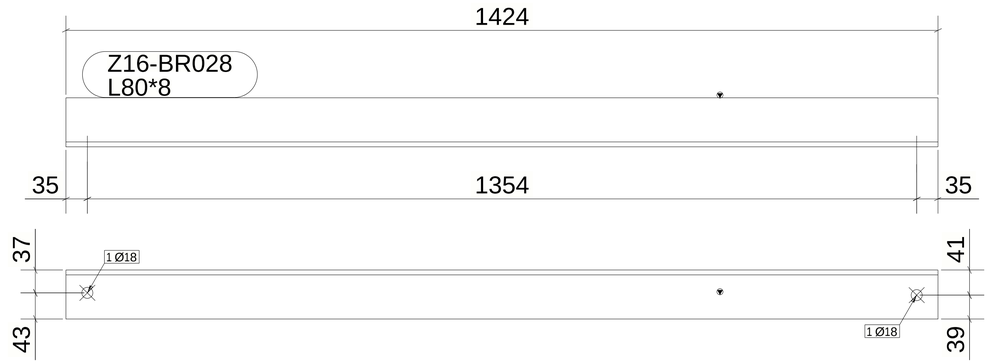

1 *REQUIRED AS DRAWN MARKED* Z16-BR028

6 October Monorail
Engineering Unit
Valid For Construction

GENERAL NOTES:

1. THE DIMENSIONS SHOWN ARE NOMINAL (IN MILLIMETERS), U.N.O.
2. WELD SIZESHALL BE AISC MINIMUM OF 6 mm UNLESS NOTED OTHERWISE.
3. ALL FIELD WELDS SHALL BE INSPECTED PER QUALITY ASSURANCE AND SPECIAL INSPECTIONS.

REFERENCE DRAWINGS

1	93M-BOA-NAT-LOT-04833
2	93M-BOA-NAT-LOT-09170
3	93M-BOA-NAT-LOT-01976
4	93M-BOA-NAT-LOT-20021
5	
6	
7	
8	
9	

6TH OF OCTOBER CITY RAIL TRANSIT MONORAIL

The Authority — Hill International Consultant — Main Contractor — Structural Designer

KEY PLAN:

SCALE: AS SHOWN | SHOP DRAWING | DATE: 08/29/2023

REV	DATE	DSG.	CHK.	APP.	AMENDMENTS	STATUS
B	08/29/2023	M.KH	M.KH	DR.M.M	ISSUED FOR INFORMATION	IFI
A	09/21/2022	M.KH	M.KH	DR.M.M	ISSUED FOR INFORMATION	IFI

DRAWING TITLE
6TH OF OCTOBER MONORAIL
SERVICE WALKWAYS
ZONE(1016)
Z16-BR028

Project Code	Rubric	Initiator	Lot	Ref	Number	Revision
93M	476	ACC	60DEP	DWG	16038	B

Tekla structures

Approval is subject to approval of coordination package between multi-discipline.

REVIEWED WITH COMMENT
MONORAILS PROJECT

MATERIAL LIST FOR ASSEMBLY MK'D Z16-BR017

Mark	Profile	GRADE	No.	Length	Area	Weight
Z16-BR017	L80*8	S235JR	1	2823	0.91	26.95
				Total	0.91	26.95

BOLT LIST:-

BOLT \ STUD	BOLT DESCRIPTION	QTY	FINISH
BOLT	B1N2W16 X 50 A325M	4	

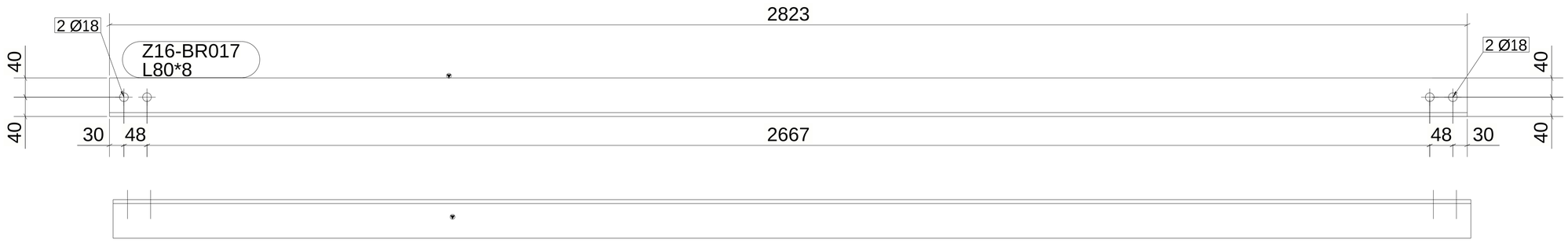

1 *REQUIRED AS DRAWN MARKED* Z16-BR017

6 October Monorail
Engineering Unit
Valid For Construction

GENERAL NOTES:

1. THE DIMENSIONS SHOWN ARE NOMINAL (IN MILLIMETERS), U.N.O.
2. WELD SIZESHALL BE AISC MINIMUM OF 6 mm UNLESS NOTED OTHERWISE.
3. ALL FIELD WELDS SHALL BE INSPECTED PER QUALITY ASSURANCE AND SPECIAL INSPECTIONS.

REFERENCE DRAWINGS

1	93M-BOA-NAT-LOT-04833
2	93M-BOA-NAT-LOT-09170
3	93M-BOA-NAT-LOT-01976
4	93M-BOA-NAT-LOT-20021
5	
6	
7	
8	
9	

6TH OF OCTOBER CITY RAIL TRANSIT MONORAIL

The Authority — Consultant — Main Contractor — Structural Designer

KEY PLAN:

SCALE: AS SHOWN | SHOP DRAWING | DATE: 08/29/2023

REV	DATE	DSG.	CHK.	APP.	AMENDMENTS	STATUS
B	08/29/2023	M.KH	M.KH	DR.M.M	ISSUED FOR INFORMATION	IFI
A	09/21/2022	M.KH	M.KH	DR.M.M	ISSUED FOR INFORMATION	IFI

DRAWING TITLE
6TH OF OCTOBER MONORAIL
SERVICE WALKWAYS
ZONE(1016)
Z16-BR017

Project Code	Rubric	Initiator	Lot	Ref	Number	Revision
93	M047	6ACC	60DE	PDWG	1603	9 B

Tekla structures

Approval is subject to approval of coordination package between multi-discipline.

REVIEWED WITH COMMENT
MONORAILS PROJECT

MATERIAL LIST FOR ASSEMBLY MK'D Z16-BR021

Mark	Profile	GRADE	No.	Length	Area	Weight
Z16-BR021	L60*6	S235JR	1	1061	0.26	5.69
				Total	0.26	5.69

BOLT LIST:-

BOLT \ STUD	BOLT DESCRIPTION	QTY	FINISH

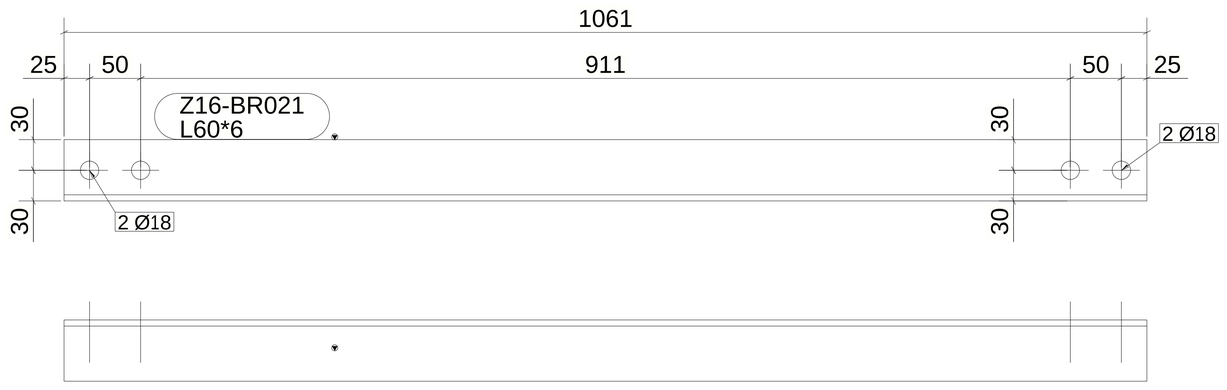

2 *REQUIRED AS DRAWN MARKED* Z16-BR021

6 October Monorail
Engineering Unit
Valid For Construction

GENERAL NOTES:

1. THE DIMENSIONS SHOWN ARE NOMINAL (IN MILLIMETERS), U.N.O.
2. WELD SIZESHALL BE AISC MINIMUM OF 6 mm UNLESS NOTED OTHERWISE.
3. ALL FIELD WELDS SHALL BE INSPECTED PER QUALITY ASSURANCE AND SPECIAL INSPECTIONS.

REFERENCE DRAWINGS

1	93M-BOA-NAT-LOT-04833
2	93M-BOA-NAT-LOT-09170
3	93M-BOA-NAT-LOT-01976
4	93M-BOA-NAT-LOT-20021
5	
6	
7	
8	
9	

6TH OF OCTOBER CITY RAIL TRANSIT MONORAIL

The Authority — Hill International (Consultant) — Main Contractor — Structural Designer

KEY PLAN:

SCALE: AS SHOWN | SHOP DRAWING | DATE: 08/29/2023

REV	DATE	DSG.	CHK.	APP.	AMENDMENTS	STATUS
B	08/29/2023	M.KH	M.KH	DR.M.M	ISSUED FOR INFORMATION	IFI
A	09/21/2022	M.KH	M.KH	DR.M.M	ISSUED FOR INFORMATION	IFI

DRAWING TITLE
6TH OF OCTOBER MONORAIL
SERVICE WALKWAYS
ZONE(1016)
Z16-BR021

Project Code	Rubric	Initiator	Lot	Ref	Number	Revision
93M	047	6ACC	60DEP	DWG	16040	B

Tekla structures

This assembly is not found in the GA.

REVIEWED WITH COMMENT
MONORAILS PROJECT

MATERIAL LIST FOR ASSEMBLY MK'D Z16-BR027

Mark	Profile	GRADE	No.	Length	Area	Weight
Z16-BR027	L80*8	S235JR	1	1379	0.44	13.17
				Total	0.44	13.17

BOLT LIST:-

BOLT \ STUD	BOLT DESCRIPTION	QTY	FINISH
BOLT	B1N2W16 X 50 A325M	2	

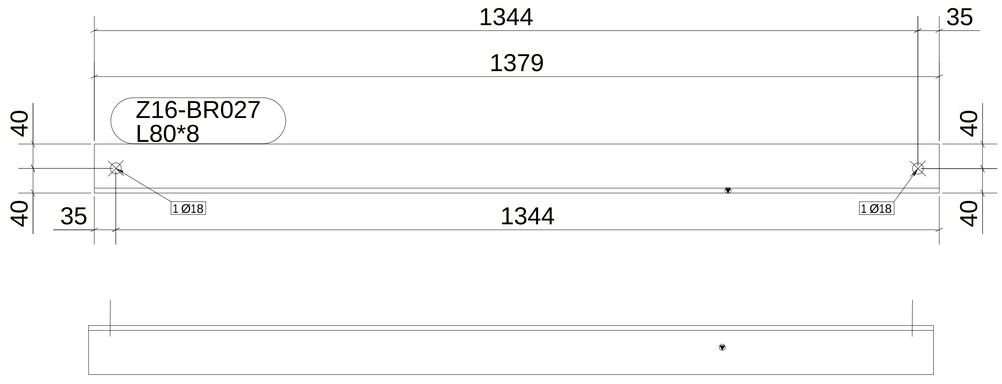

1 *REQUIRED AS DRAWN MARKED* Z16-BR027

6 October Monorail
Engineering Unit
Valid For Construction

GENERAL NOTES:

1. THE DIMENSIONS SHOWN ARE NOMINAL (IN MILLIMETERS), U.N.O.
2. WELD SIZESHALL BE AISC MINIMUM OF 6 mm UNLESS NOTED OTHERWISE.
3. ALL FIELD WELDS SHALL BE INSPECTED PER QUALITY ASSURANCE AND SPECIAL INSPECTIONS.

REFERENCE DRAWINGS

1	93M-BOA-NAT-LOT-04833
2	93M-BOA-NAT-LOT-09170
3	93M-BOA-NAT-LOT-01976
4	93M-BOA-NAT-LOT-20021
5	
6	
7	
8	
9	

6TH OF OCTOBER CITY RAIL TRANSIT MONORAIL

The Authority — Hill International Consultant — Main Contractor — Structural Designer

KEY PLAN:

SCALE: AS SHOWN | SHOP DRAWING | DATE: 08/29/2023

REV	DATE	DSG.	CHK.	APP.	AMENDMENTS	STATUS
B	08/29/2023	M.KH	M.KH	DR.M.M	ISSUED FOR INFORMATION	IFI
A	09/21/2022	M.KH	M.KH	DR.M.M	ISSUED FOR INFORMATION	IFI

DRAWING TITLE
6TH OF OCTOBER MONORAIL
SERVICE WALKWAYS
ZONE(1016)
Z16-BR027

Project Code	Rubric	Initiator	Lot	Ref	Number	Revision
93	M047	6ACC	60DE	PDWG	16041	B

Tekla structures

Approval is subject to approval of coordination package between multi-discipline.

REVIEWED WITH COMMENT
MONORAILS PROJECT

MATERIAL LIST FOR ASSEMBLY MK'D Z16-BR011

Mark	Profile	GRADE	No.	Length	Area	Weight
Z16-BR011	L80*8	S235JR	1	3453	1.11	32.96
				Total	1.11	32.96

BOLT LIST:-

BOLT \ STUD	BOLT DESCRIPTION	QTY	FINISH
BOLT	B1N2W16 X 50 A325M	4	

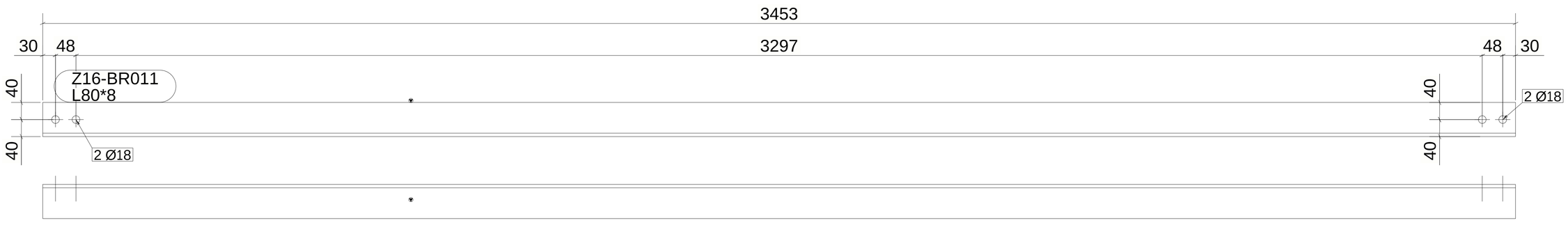

1 *REQUIRED AS DRAWN MARKED* Z16-BR011

6 October Monorail
Engineering Unit
Valid For Construction

GENERAL NOTES:

1. THE DIMENSIONS SHOWN ARE NOMINAL (IN MILLIMETERS), U.N.O.
2. WELD SIZESHALL BE AISC MINIMUM OF 6 mm UNLESS NOTED OTHERWISE.
3. ALL FIELD WELDS SHALL BE INSPECTED PER QUALITY ASSURANCE AND SPECIAL INSPECTIONS.

REFERENCE DRAWINGS

1	93M-BOA-NAT-LOT-04833
2	93M-BOA-NAT-LOT-09170
3	93M-BOA-NAT-LOT-01976
4	93M-BOA-NAT-LOT-20021
5	
6	
7	
8	
9	

6TH OF OCTOBER CITY RAIL TRANSIT MONORAIL

The Authority | Consultant: Hill International | Main Contractor: ORASCOM CONSTRUCTION, Six Construct, BOMBARDIER | Structural Designer: INNOVA TRANSPORTATION

KEY PLAN:

SCALE: AS SHOWN | SHOP DRAWING | DATE: 08/29/2023

REV	DATE	DSG.	CHK.	APP.	AMENDMENTS	STATUS
B	08/29/2023	M.KH	M.KH	DR.M.M	ISSUED FOR INFORMATION	IFI
A	09/21/2022	M.KH	M.KH	DR.M.M	ISSUED FOR INFORMATION	IFI

DRAWING TITLE
6TH OF OCTOBER MONORAIL
SERVICE WALKWAYS
ZONE(1016)
Z16-BR011

Project Code	Rubric	Initiator	Lot	Ref	Number	Revision
93	M04	76	ACC60	DEP	DWG1604	2 B

Tekla structures

REVIEWED WITH COMMENT
MONORAILS PROJECT

MATERIAL LIST FOR ASSEMBLY MK'D Z16-BR025

Mark	Profile	GRADE	No.	Length	Area	Weight
Z16-BR025	L80*8	S235JR	1	1412	0.45	13.48
				Total	0.45	13.48

BOLT LIST:-

BOLT \ STUD	BOLT DESCRIPTION	QTY	FINISH
BOLT	B1N2W16 X 50 A325M	2	

Connection is not matching with the design drawings as edge distances should be same for both.

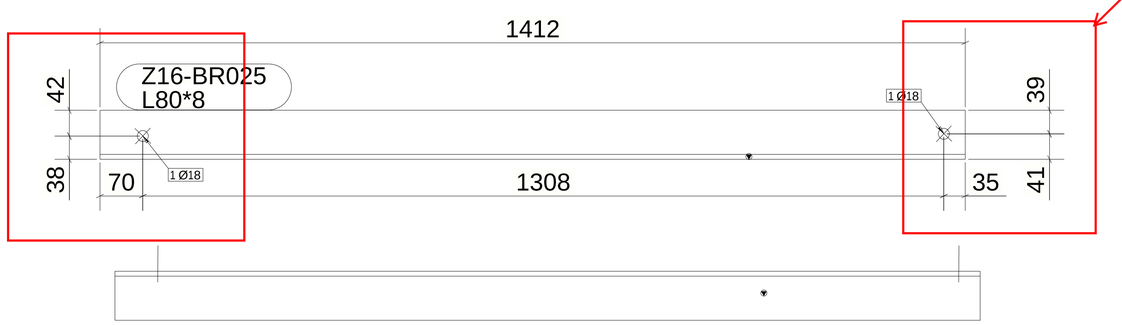

1 *REQUIRED AS DRAWN MARKED* Z16-BR025

6 October Monorail
Engineering Unit
Valid For Construction

GENERAL NOTES:

1. THE DIMENSIONS SHOWN ARE NOMINAL (IN MILLIMETERS), U.N.O.
2. WELD SIZESHALL BE AISC MINIMUM OF 6 mm UNLESS NOTED OTHERWISE.
3. ALL FIELD WELDS SHALL BE INSPECTED PER QUALITY ASSURANCE AND SPECIAL INSPECTIONS.

REFERENCE DRAWINGS

1	93M-BOA-NAT-LOT-04833
2	93M-BOA-NAT-LOT-09170
3	93M-BOA-NAT-LOT-01976
4	93M-BOA-NAT-LOT-20021
5	
6	
7	
8	
9	

6TH OF OCTOBER CITY RAIL TRANSIT MONORAIL

The Authority | Consultant: Hill International | Main Contractor: ORASCOM CONSTRUCTION, BOMBARDIER | Structural Designer: INNOVA TRANSPORTATION

KEY PLAN:

SCALE: AS SHOWN | SHOP DRAWING | DATE: 08/29/2023

REV	DATE	DSG.	CHK.	APP.	AMENDMENTS	STATUS
B	08/29/2023	M.KH	M.KH	DR.M.M	ISSUED FOR INFORMATION	IFI
A	09/21/2022	M.KH	M.KH	DR.M.M	ISSUED FOR INFORMATION	IFI

DRAWING TITLE
6TH OF OCTOBER MONORAIL
SERVICE WALKWAYS
ZONE(1016)
Z16-BR025

Project Code	Rubric	Initiator	Lot	Ref	Number	Revision
93M	047	6ACC	60DE	PDWG	16043	B

Tekla structures

Approval is subject to approval of coordination package between multi-discipline.

REVIEWED WITH COMMENT
MONORAILS PROJECT

MATERIAL LIST FOR ASSEMBLY MK'D Z16-BR010

Mark	Profile	GRADE	No.	Length	Area	Weight
Z16-BR010	L80*8	S235JR	1	3447	1.11	32.90
				Total	1.11	32.90

BOLT LIST:-

BOLT \ STUD	BOLT DESCRIPTION	QTY	FINISH
BOLT	B1N2W16 X 50 A325M	4	

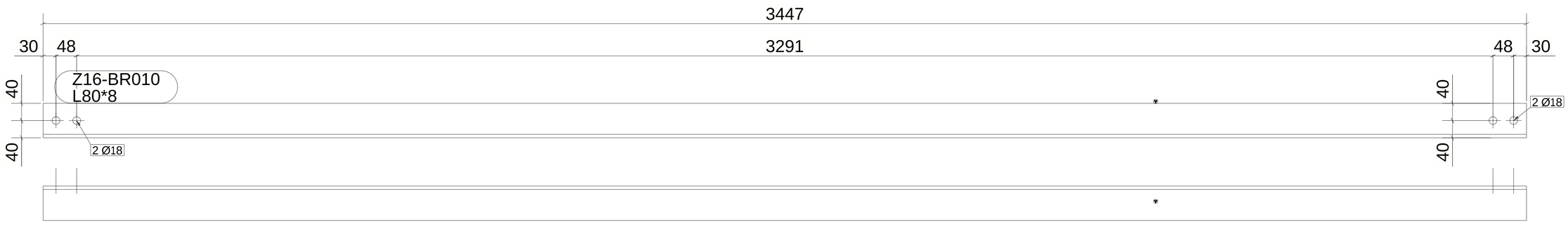

1 *REQUIRED AS DRAWN MARKED* Z16-BR010

6 October Monorail
Engineering Unit
Valid For Construction

GENERAL NOTES:

1. THE DIMENSIONS SHOWN ARE NOMINAL (IN MILLIMETERS), U.N.O.
2. WELD SIZESHALL BE AISC MINIMUM OF 6 mm UNLESS NOTED OTHERWISE.
3. ALL FIELD WELDS SHALL BE INSPECTED PER QUALITY ASSURANCE AND SPECIAL INSPECTIONS.

REFERENCE DRAWINGS

1	93M-BOA-NAT-LOT-04833
2	93M-BOA-NAT-LOT-09170
3	93M-BOA-NAT-LOT-01976
4	93M-BOA-NAT-LOT-20021
5	
6	
7	
8	
9	

6TH OF OCTOBER CITY RAIL TRANSIT MONORAIL

The Authority — Consultant — Main Contractor — Structural Designer

KEY PLAN:

SCALE: AS SHOWN | SHOP DRAWING | DATE: 08/29/2023

REV	DATE	DSG.	CHK.	APP.	AMENDMENTS	STATUS
B	08/29/2023	M.KH	M.KH	DR.M.M	ISSUED FOR INFORMATION	IFI
A	09/21/2022	M.KH	M.KH	DR.M.M	ISSUED FOR INFORMATION	IFI

DRAWING TITLE
6TH OF OCTOBER MONORAIL
SERVICE WALKWAYS
ZONE(1016)
Z16-BR010

Project Code	Rubric	Initiator	Lot	Ref	Number	Revision
93	M047	6ACC	60DE	PDWG	1604	4 B

Tekla structures

Approval is subject to approval of coordination package between multi-discipline.

REVIEWED WITH COMMENT
MONORAILS PROJECT

MATERIAL LIST FOR ASSEMBLY MK'D Z16-BR008						
Mark	Profile	GRADE	No.	Length	Area	Weight
Z16-BR008	L80*8	S235JR	1	3464	1.11	33.06
				Total	1.11	33.06

BOLT LIST:-

BOLT \ STUD	BOLT DESCRIPTION	QTY	FINISH
BOLT	B1N2W16 X 50 A325M	4	

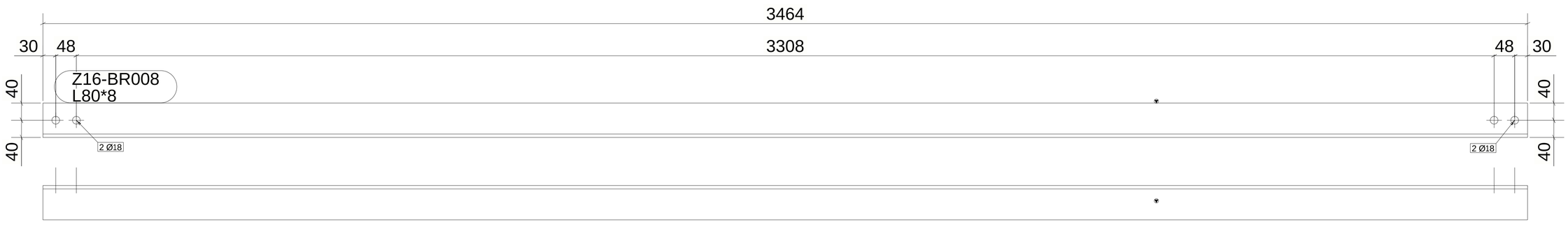

1 *REQUIRED AS DRAWN MARKED* Z16-BR008

6 October Monorail
Engineering Unit
Valid For Construction

GENERAL NOTES:

1. THE DIMENSIONS SHOWN ARE NOMINAL (IN MILLIMETERS), U.N.O.
2. WELD SIZESHALL BE AISC MINIMUM OF 6 mm UNLESS NOTED OTHERWISE.
3. ALL FIELD WELDS SHALL BE INSPECTED PER QUALITY ASSURANCE AND SPECIAL INSPECTIONS.

REFERENCE DRAWINGS

1	93M-BOA-NAT-LOT-04833
2	93M-BOA-NAT-LOT-09170
3	93M-BOA-NAT-LOT-01976
4	93M-BOA-NAT-LOT-20021
5	
6	
7	
8	
9	

6TH OF OCTOBER CITY RAIL TRANSIT MONORAIL

The Authority — Consultant — Main Contractor — Structural Designer

KEY PLAN:

SCALE: AS SHOWN | SHOP DRAWING | DATE: 08/29/2023

REV	DATE	DSG.	CHK.	APP.	AMENDMENTS	STATUS
B	08/29/2023	M.KH	M.KH	DR.M.M	ISSUED FOR INFORMATION	IFI
A	09/21/2022	M.KH	M.KH	DR.M.M	ISSUED FOR INFORMATION	IFI

DRAWING TITLE
6TH OF OCTOBER MONORAIL
SERVICE WALKWAYS
ZONE(1016)
Z16-BR008

Project Code	Rubric	Initiator	Lot	Ref	Number	Revision
93	M047	6ACC	60DE	PDWG	16045	B

Tekla structures

Approval is subject to approval of coordination package between multi-discipline.

REVIEWED WITH COMMENT
MONORAILS PROJECT

MATERIAL LIST FOR ASSEMBLY MK'D Z16-BR026

Mark	Profile	GRADE	No.	Length	Area	Weight
Z16-BR026	L80*8	S235JR	1	1434	0.46	13.69
				Total	0.46	13.69

BOLT LIST:-

BOLT \ STUD	BOLT DESCRIPTION	QTY	FINISH
BOLT	B1N2W16 X 50 A325M	2	

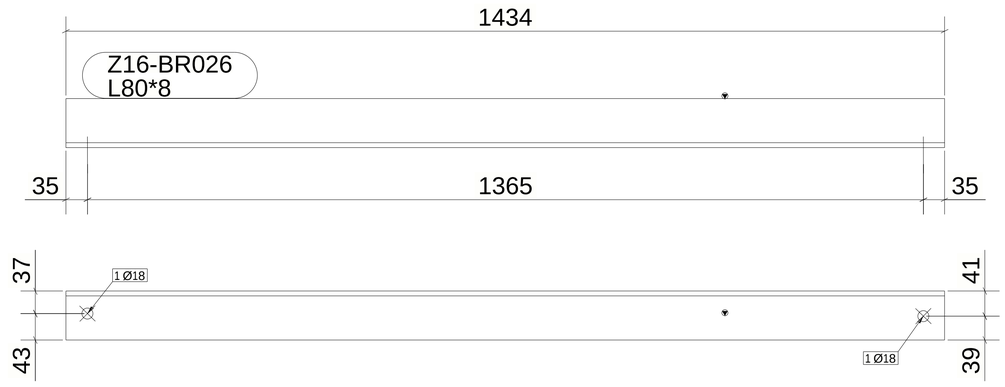

1 *REQUIRED AS DRAWN MARKED* Z16-BR026

6 October Monorail
Engineering Unit
Valid For Construction

GENERAL NOTES:

1. THE DIMENSIONS SHOWN ARE NOMINAL (IN MILLIMETERS), U.N.O.
2. WELD SIZESHALL BE AISC MINIMUM OF 6 mm UNLESS NOTED OTHERWISE.
3. ALL FIELD WELDS SHALL BE INSPECTED PER QUALITY ASSURANCE AND SPECIAL INSPECTIONS.

REFERENCE DRAWINGS

1	93M-BOA-NAT-LOT-04833
2	93M-BOA-NAT-LOT-09170
3	93M-BOA-NAT-LOT-01976
4	93M-BOA-NAT-LOT-20021
5	
6	
7	
8	
9	

6TH OF OCTOBER CITY RAIL TRANSIT MONORAIL

The Authority | Consultant: Hill International | Main Contractor: ORASCOM CONSTRUCTION, BOMBARDIER | Structural Designer: INNOVA TRANSPORTATION

KEY PLAN:

SCALE: AS SHOWN | SHOP DRAWING | DATE: 08/29/2023

REV	DATE	DSG.	CHK.	APP.	AMENDMENTS	STATUS
B	08/29/2023	M.KH	M.KH	DR.M.M	ISSUED FOR INFORMATION	IFI
A	09/21/2022	M.KH	M.KH	DR.M.M	ISSUED FOR INFORMATION	IFI

DRAWING TITLE
6TH OF OCTOBER MONORAIL
SERVICE WALKWAYS
ZONE(1016)
Z16-BR026

Project Code	Rubric	Initiator	Lot	Ref	Number	Revision
9 3 M 0 4 7 6	A C C	6 0 D E P	D W G		1 6 0 4 6	B

Tekla structures

Approval is subject to approval of coordination package between multi-discipline.

REVIEWED WITH COMMENT
MONORAILS PROJECT

MATERIAL LIST FOR ASSEMBLY MK'D Z17-BR003

Mark	Profile	GRADE	No.	Length	Area	Weight
Z17-BR003	L80*8	S235JR	1	3464	1.11	33.06
				Total	1.11	33.06

BOLT LIST:-

BOLT \ STUD	BOLT DESCRIPTION	QTY	FINISH
BOLT	B1N2W16 X 50 A325M	4	

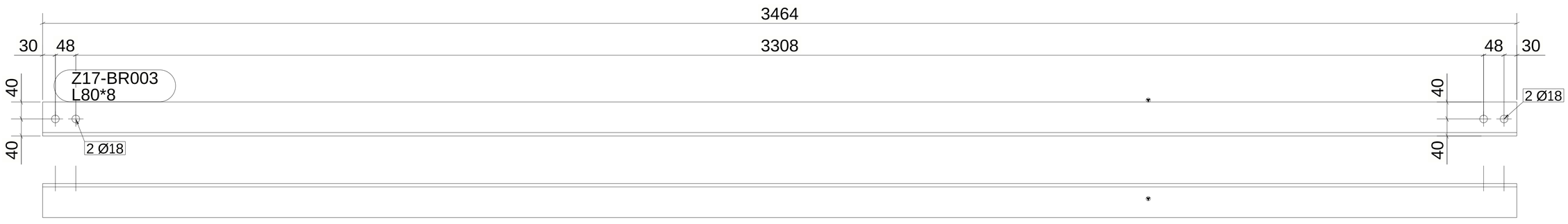

1 *REQUIRED AS DRAWN MARKED* Z17-BR003

6 October Monorail
Engineering Unit
Valid For Construction

GENERAL NOTES:

1. THE DIMENSIONS SHOWN ARE NOMINAL (IN MILLIMETERS), U.N.O.
2. WELD SIZESHALL BE AISC MINIMUM OF 6 mm UNLESS NOTED OTHERWISE.
3. ALL FIELD WELDS SHALL BE INSPECTED PER QUALITY ASSURANCE AND SPECIAL INSPECTIONS.

REFERENCE DRAWINGS

1	93M-BOA-NAT-LOT-04833
2	93M-BOA-NAT-LOT-09170
3	93M-BOA-NAT-LOT-01976
4	93M-BOA-NAT-LOT-20021
5	
6	
7	
8	
9	

6TH OF OCTOBER CITY RAIL TRANSIT MONORAIL

The Authority — Hill International (Consultant) — Main Contractor — Structural Designer

KEY PLAN:

SCALE: AS SHOWN | SHOP DRAWING | DATE: 08/29/2023

REV	DATE	DSG.	CHK.	APP.	AMENDMENTS	STATUS
B	08/29/2023	M.KH	M.KH	DR.M.M	ISSUED FOR INFORMATION	IFI
A	09/21/2022	M.KH	M.KH	DR.M.M	ISSUED FOR INFORMATION	IFI

DRAWING TITLE
6TH OF OCTOBER MONORAIL
SERVICE WALKWAYS
ZONE(1016)
Z17-BR003

Project Code	Rubric	Initiator	Lot	Ref	Number	Revision
93	M047	6ACC	60DE	PDWG	1604 7	B

Tekla structures

Approval is subject to approval of coordination package between multi-discipline.

REVIEWED WITH COMMENT
MONORAILS PROJECT

MATERIAL LIST FOR ASSEMBLY MK'D Z16-BR012

Mark	Profile	GRADE	No.	Length	Area	Weight
Z16-BR012	L80*8	S235JR	1	3462	1.11	33.05
				Total	1.11	33.05

BOLT LIST:-

BOLT \ STUD	BOLT DESCRIPTION	QTY	FINISH
BOLT	B1N2W16 X 50 A325M	4	

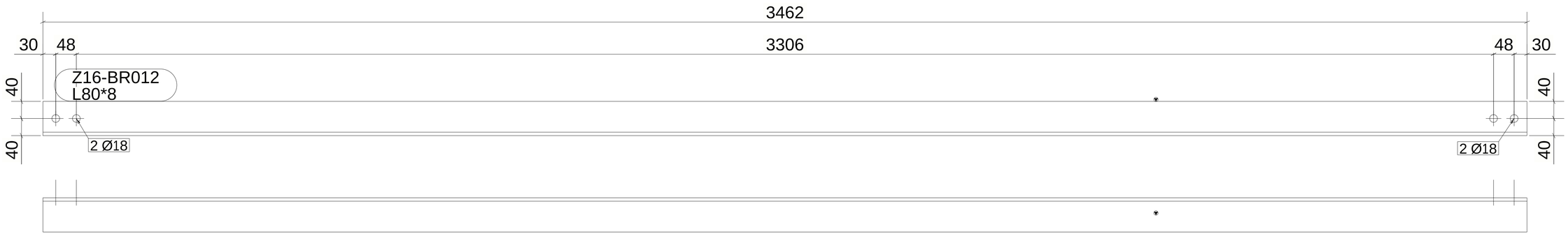

1 *REQUIRED AS DRAWN MARKED* Z16-BR012

6 October Monorail
Engineering Unit
Valid For Construction

GENERAL NOTES:

1. THE DIMENSIONS SHOWN ARE NOMINAL (IN MILLIMETERS), U.N.O.
2. WELD SIZESHALL BE AISC MINIMUM OF 6 mm UNLESS NOTED OTHERWISE.
3. ALL FIELD WELDS SHALL BE INSPECTED PER QUALITY ASSURANCE AND SPECIAL INSPECTIONS.

REFERENCE DRAWINGS

1	93M-BOA-NAT-LOT-04833
2	93M-BOA-NAT-LOT-09170
3	93M-BOA-NAT-LOT-01976
4	93M-BOA-NAT-LOT-20021
5	
6	
7	
8	
9	

6TH OF OCTOBER CITY RAIL TRANSIT MONORAIL

The Authority — Consultant — Main Contractor — Structural Designer

KEY PLAN:

SCALE: AS SHOWN | SHOP DRAWING | DATE: 08/29/2023

REV	DATE	DSG.	CHK.	APP.	AMENDMENTS	STATUS
B	08/29/2023	M.KH	M.KH	DR.M.M	ISSUED FOR INFORMATION	IFI
A	09/21/2022	M.KH	M.KH	DR.M.M	ISSUED FOR INFORMATION	IFI

DRAWING TITLE
6TH OF OCTOBER MONORAIL
SERVICE WALKWAYS
ZONE(1016)
Z16-BR012

Project Code	Rubric	Initiator	Lot	Ref	Number	Revision
93	M047	6ACC	60DE	PDWG	16048	B

Tekla structures

Approval is subject to approval of coordination package between multi-discipline.

REVIEWED WITH COMMENT MONORAILS PROJECT

MATERIAL LIST FOR ASSEMBLY MK'D Z16-BR015

Mark	Profile	GRADE	No.	Length	Area	Weight
Z16-BR015	L80*8	S235JR	1	3460	1.11	33.03
				Total	1.11	33.03

BOLT LIST:-

BOLT \ STUD	BOLT DESCRIPTION	QTY	FINISH
BOLT	B1N2W16 X 50 A325M	4	

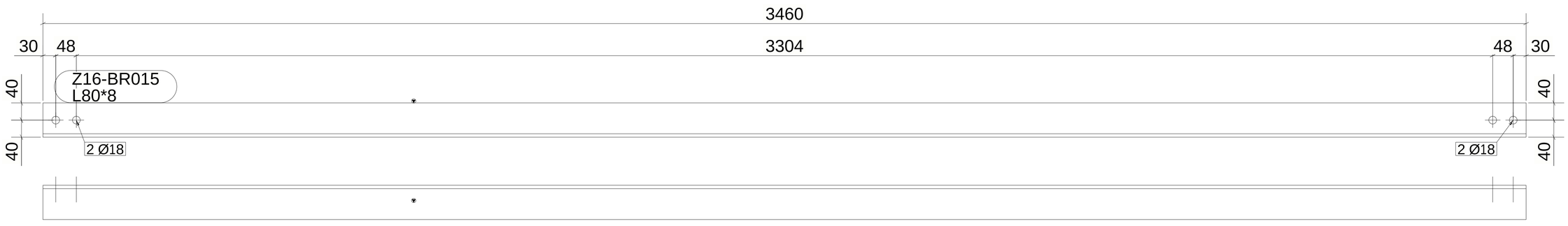

1 *REQUIRED AS DRAWN MARKED* Z16-BR015

6 October Monorail Engineering Unit
Valid For Construction

GENERAL NOTES:

1. THE DIMENSIONS SHOWN ARE NOMINAL (IN MILLIMETERS), U.N.O.
2. WELD SIZESHALL BE AISC MINIMUM OF 6 mm UNLESS NOTED OTHERWISE.
3. ALL FIELD WELDS SHALL BE INSPECTED PER QUALITY ASSURANCE AND SPECIAL INSPECTIONS.

REFERENCE DRAWINGS

1	93M-BOA-NAT-LOT-04833
2	93M-BOA-NAT-LOT-09170
3	93M-BOA-NAT-LOT-01976
4	93M-BOA-NAT-LOT-20021
5	
6	
7	
8	
9	

6TH OF OCTOBER CITY RAIL TRANSIT MONORAIL

The Authority — Hill International Consultant — Main Contractor — Structural Designer

KEY PLAN:

SCALE	SHOPDRAWING	DATE
AS SHOWN		08/29/2023

REV	DATE	DSG.	CHK.	APP.	AMENDMENTS	STATUS
B	08/29/2023	M.KH	M.KH	DR.M.M	ISSUED FOR INFORMATION	IFI
A	09/21/2022	M.KH	M.KH	DR.M.M	ISSUED FOR INFORMATION	IFI

DRAWING TITLE
6TH OF OCTOBER MONORAIL SERVICE WALKWAYS ZONE(1016)
Z16-BR015

Project Code	Rubric	Initiator	Lot	Ref	Number	Revision
93M	0476	ACC	60DEP	DWG	16049	B

Tekla structures

Approval is subject to approval of coordination package between multi-discipline.

REVIEWED WITH COMMENT
MONORAILS PROJECT

MATERIAL LIST FOR ASSEMBLY MK'DZ16-BR022

Mark	Profile	GRADE	No.	Length	Area	Weight
Z16-BR022	L60*6	S235JR	1	1061	0.26	5.69
				Total	0.26	5.69

BOLT LIST:-

BOLT \ STUD	BOLT DESCRIPTION	QTY	FINISH

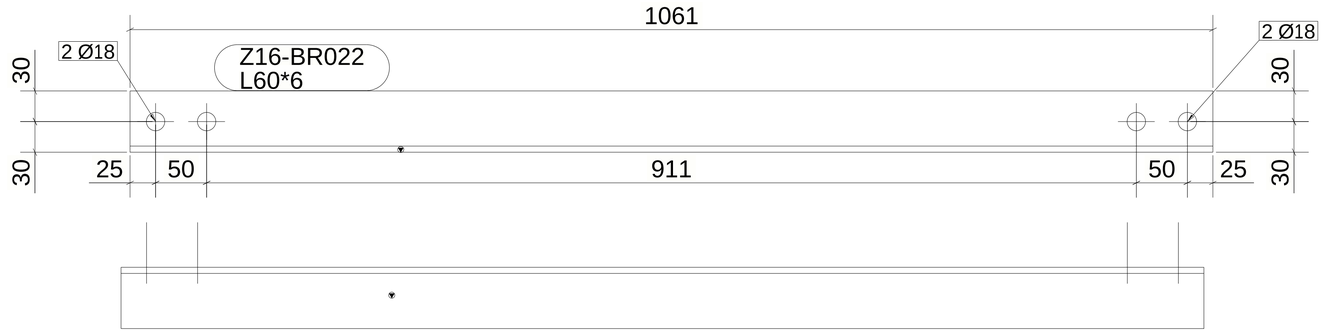

2 *REQUIRED AS DRAWN MARKED* Z16-BR022

6 October Monorail
Engineering Unit
Valid For Construction

GENERAL NOTES:

1. THE DIMENSIONS SHOWN ARE NOMINAL (IN MILLIMETERS), U.N.O.
2. WELD SIZESHALL BE AISC MINIMUM OF 6 mm UNLESS NOTED OTHERWISE.
3. ALL FIELD WELDS SHALL BE INSPECTED PER QUALITY ASSURANCE AND SPECIAL INSPECTIONS.

REFERENCE DRAWINGS

1	93M-BOA-NAT-LOT-04833
2	93M-BOA-NAT-LOT-09170
3	93M-BOA-NAT-LOT-01976
4	93M-BOA-NAT-LOT-20021
5	
6	
7	
8	
9	

6TH OF OCTOBER CITY RAIL TRANSIT MONORAIL

The Authority — Consultant: Hill International — Main Contractor: ORASCOM CONSTRUCTION / BOMBARDIER — Structural Designer: INNOVA TRANSPORTATION

KEY PLAN:

SCALE: AS SHOWN | SHOP DRAWING | DATE: 08/29/2023

REV	DATE	DSG.	CHK.	APP.	AMENDMENTS	STATUS
B	08/29/2023	M.KH	M.KH	DR.M.M	ISSUED FOR INFORMATION	IFI
A	09/21/2022	M.KH	M.KH	DR.M.M	ISSUED FOR INFORMATION	IFI

DRAWING TITLE
6TH OF OCTOBER MONORAIL
SERVICE WALKWAYS
ZONE(1016)
Z16-BR022

Project Code	Rubric	Initiator	Lot	Ref	Number	Revision
93M	047	6ACC	60DE	PDWG	16050	B

Tekla structures

Approval is subject to approval of coordination package between multi-discipline.

REVIEWED WITH COMMENT
MONORAILS PROJECT

MATERIAL LIST FOR ASSEMBLY MK'D Z16-BR013

Mark	Profile	GRADE	No.	Length	Area	Weight
Z16-BR013	L80*8	S235JR	1	3462	1.11	33.04
				Total	1.11	33.04

BOLT LIST:-

BOLT \ STUD	BOLT DESCRIPTION	QTY	FINISH
BOLT	B1N2W16 X 50 A325M	4	

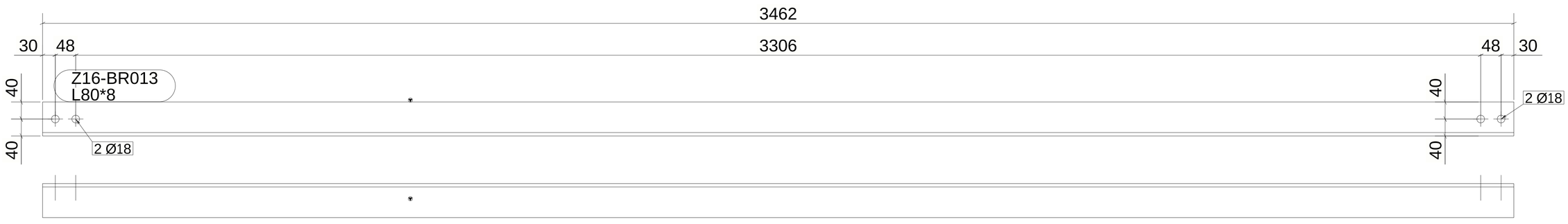

2 *REQUIRED AS DRAWN MARKED* Z16-BR013

6 October Monorail
Engineering Unit
Valid For Construction

GENERAL NOTES:

1. THE DIMENSIONS SHOWN ARE NOMINAL (IN MILLIMETERS), U.N.O.
2. WELD SIZESHALL BE AISC MINIMUM OF 6 mm UNLESS NOTED OTHERWISE.
3. ALL FIELD WELDS SHALL BE INSPECTED PER QUALITY ASSURANCE AND SPECIAL INSPECTIONS.

REFERENCE DRAWINGS

1	93M-BOA-NAT-LOT-04833
2	93M-BOA-NAT-LOT-09170
3	93M-BOA-NAT-LOT-01976
4	93M-BOA-NAT-LOT-20021
5	
6	
7	
8	
9	

6TH OF OCTOBER CITY RAIL TRANSIT MONORAIL

The Authority — Consultant — Main Contractor — Structural Designer

KEY PLAN:

SCALE: AS SHOWN | SHOP DRAWING | DATE: 08/29/2023

REV	DATE	DSG.	CHK.	APP.	AMENDMENTS	STATUS
B	08/29/2023	M.KH	M.KH	DR.M.M	ISSUED FOR INFORMATION	IFI
A	09/21/2022	M.KH	M.KH	DR.M.M	ISSUED FOR INFORMATION	IFI

DRAWING TITLE
6TH OF OCTOBER MONORAIL
SERVICE WALKWAYS
ZONE(1016)
Z16-BR013

Project Code	Rubric	Initiator	Lot	Ref	Number	Revision
93	M047	6ACC	60DE	PDWG	1605	1 B

Tekla structures

Approval is subject to approval of coordination package between multi-discipline.

REVIEWED WITH COMMENT
MONORAILS PROJECT

MATERIAL LIST FOR ASSEMBLY MK'D Z16-BR009

Mark	Profile	GRADE	No.	Length	Area	Weight
Z16-BR009	L80*8	S235JR	1	3497	1.12	33.38
				Total	1.12	33.38

BOLT LIST:-

BOLT \ STUD	BOLT DESCRIPTION	QTY	FINISH
BOLT	B1N2W16 X 50 A325M	4	

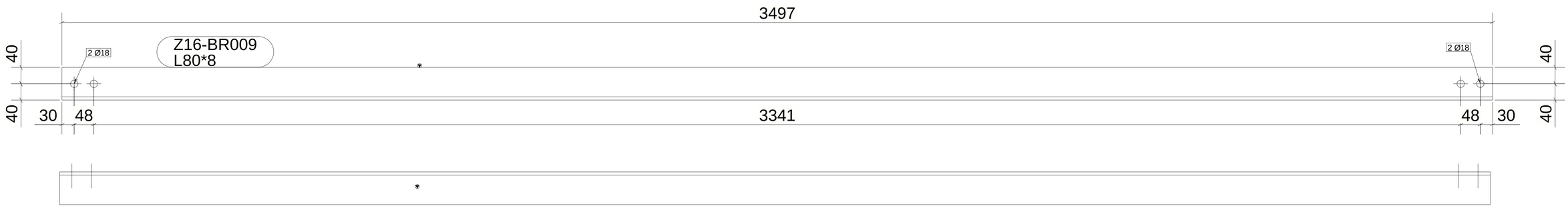

1 *REQUIRED AS DRAWN MARKED* Z16-BR009

6 October Monorail
Engineering Unit
Valid For Construction

GENERAL NOTES:

1. THE DIMENSIONS SHOWN ARE NOMINAL (IN MILLIMETERS), U.N.O.
2. WELD SIZESHALL BE AISC MINIMUM OF 6 mm UNLESS NOTED OTHERWISE.
3. ALL FIELD WELDS SHALL BE INSPECTED PER QUALITY ASSURANCE AND SPECIAL INSPECTIONS.

REFERENCE DRAWINGS

1	93M-BOA-NAT-LOT-04833
2	93M-BOA-NAT-LOT-09170
3	93M-BOA-NAT-LOT-01976
4	93M-BOA-NAT-LOT-20021
5	
6	
7	
8	
9	

6TH OF OCTOBER CITY RAIL TRANSIT MONORAIL

The Authority — Consultant — Main Contractor — Structural Designer

KEY PLAN:

SCALE: AS SHOWN | SHOP DRAWING | DATE: 08/29/2023

REV	DATE	DSG.	CHK.	APP.	AMENDMENTS	STATUS
B	08/29/2023	M.KH	M.KH	DR.M.M	ISSUED FOR INFORMATION	IFI
A	09/21/2022	M.KH	M.KH	DR.M.M	ISSUED FOR INFORMATION	IFI

DRAWING TITLE
6TH OF OCTOBER MONORAIL
SERVICE WALKWAYS
ZONE(1016)
Z16-BR009

Project Code	Rubric	Initiator	Lot	Ref	Number	Revision
93M	047	6ACC	60DE	PDWG	1605	2 B

Tekla structures

MATERIAL LIST FOR ASSEMBLY MK'D	Z16-CHQ005					
Mark	Profile	GRADE	No.	Length	Area	Weight
Z16-CHQ005	CHQD5*1103.4	S235JR	1	3082	6.61	128.56
				Total	6.61	128.56

BOLT LIST:-			
BOLT \ STUD	BOLT DESCRIPTION	QTY	FINISH
BOLT	B1N2W16 X 55 A325M	4	

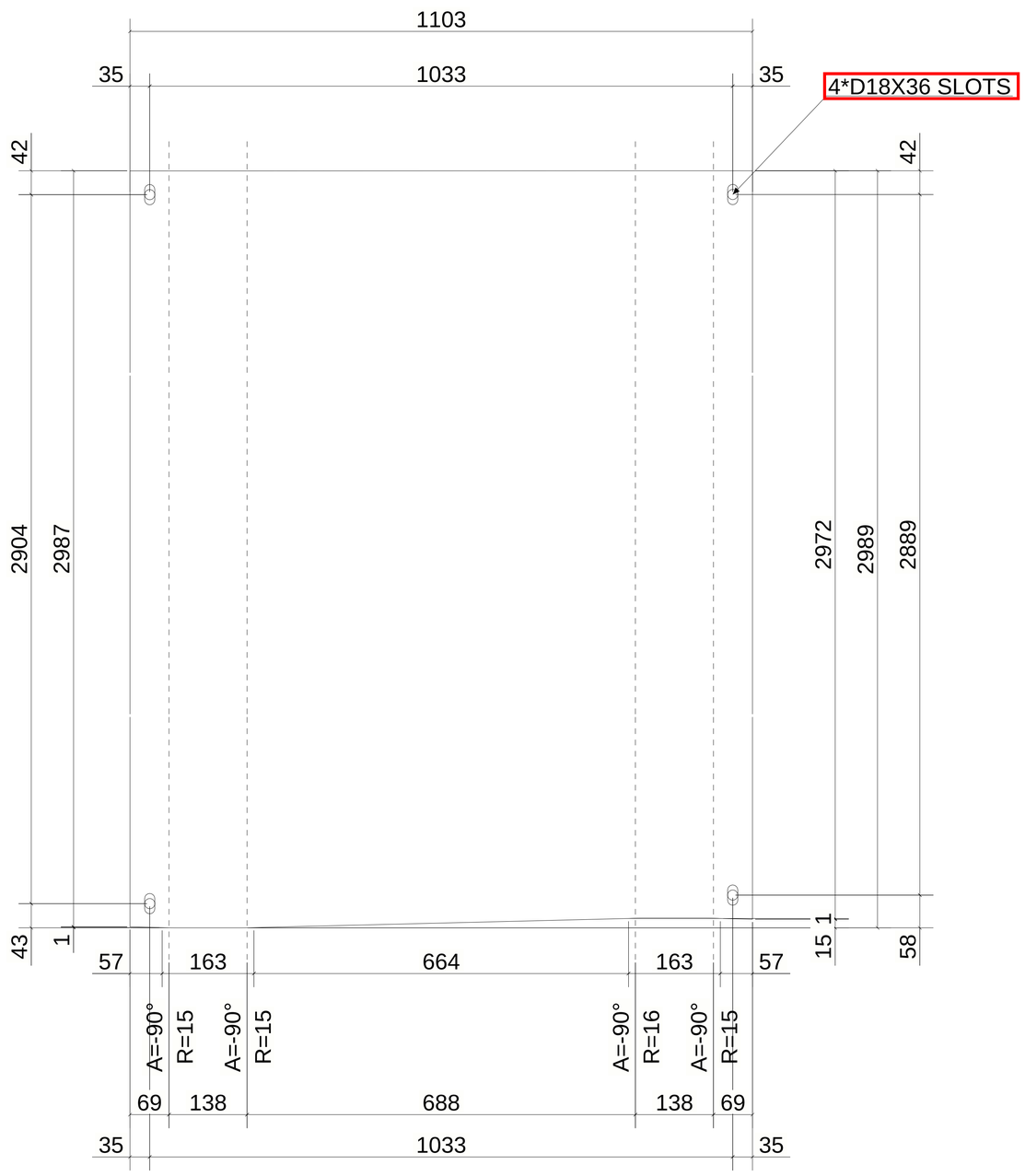

UNFOLDED VIEW

The slot should be short slot a shown in the design reference which is (18*22) according to ANSI/AISC 360-05.

B. BOLTING SCHEDULE:

ITEM	BOLT SIZE	HOLE TYPE & ORIENTATION	NOTES
SW PLANK	M16	SHORT SLOT, LONGITUDINAL	
STAIR RAIL	M16	STD	

DRAWING NO. 93M-0476-INN-000PW-BCD-00002

TABLE J3.3M
Nominal Hole Dimensions, mm

Bolt Diameter	Hole Dimensions			
	Standard (Dia.)	Oversize (Dia.)	Short-Slot (Width × Length)	Long-Slot (Width × Length)
M16	18	20	18 × 22	18 × 40
M20	22	24	22 × 26	22 × 50
M22	24	28	24 × 30	24 × 55
M24	27 [a]	30	27 × 32	27 × 60
M27	30	35	30 × 37	30 × 67
M30	33	38	33 × 40	33 × 75
≥M36	$d+3$	$d+8$	$(d+3) \times (d+10)$	$(d+3) \times 2.5d$

[a] Clearance provided allows the use of a 1-in. bolt if desirable.

sect.j3, Bolts and threaded parts, P.105

REVIEWED WITH COMMENT MONORAILS PROJECT

6 October Monorail Engineering Unit Valid For Construction

1 *REQUIRED AS DRAWN MARKED* Z16-CHQ005

GENERAL NOTES:

1. THE DIMENSIONS SHOWN ARE NOMINAL (IN MILLIMETERS), U.N.O.
2. WELD SIZESHALL BE AISC MINIMUM OF 6 mm UNLESS NOTED OTHERWISE.
3. ALL FIELD WELDS SHALL BE INSPECTED PER QUALITY ASSURANCE AND SPECIAL INSPECTIONS.

REFERENCE DRAWINGS

1	93M-BOA-NAT-LOT-04833
2	93M-BOA-NAT-LOT-09170
3	93M-BOA-NAT-LOT-01976
4	93M-BOA-NAT-LOT-20021
5	
6	
7	
8	
9	

6TH OF OCTOBER CITY RAIL TRANSIT MONORAIL

The Authority | Consultant: Hill International | Main Contractor: ORASCOM / BOMBARDIER | Structural Designer: INNOVA

KEY PLAN:

SCALE	SHOP DRAWING	DATE
AS SHOWN		08/29/2023

REV	DATE	DSG.	CHK.	APP.	AMENDMENTS	STATUS
B	08/29/2023	M.KH	M.KH	DR.M.M	ISSUED FOR INFORMATION	IFI
A	09/21/2022	M.KH	M.KH	DR.M.M	ISSUED FOR INFORMATION	IFI

DRAWING TITLE
6TH OF OCTOBER MONORAIL
SERVICE WALKWAYS
ZONE(1016)
Z16-CHQ005

Project Code	Rubric	Initiator	Lot	Ref	Number	Revision
93	M047	6ACC	60DE	PDWG	1605	B

Tekla structures

Same comments as
93M-0476-ACC-60DEP-DWG-16053-B.

REVIEWED WITH COMMENT
MONORAILS PROJECT

MATERIAL LIST FOR ASSEMBLY MK'D Z16-CHQ037

Mark	Profile	GRADE	No.	Length	Area	Weight
Z16-CHQ037	CHQD5*1103.4	S235JR	1	3090	6.63	129.00
				Total	6.63	129.00

BOLT LIST:-

BOLT \ STUD	BOLT DESCRIPTION	QTY	FINISH
BOLT	B1N2W16 X 55 A325M	4	

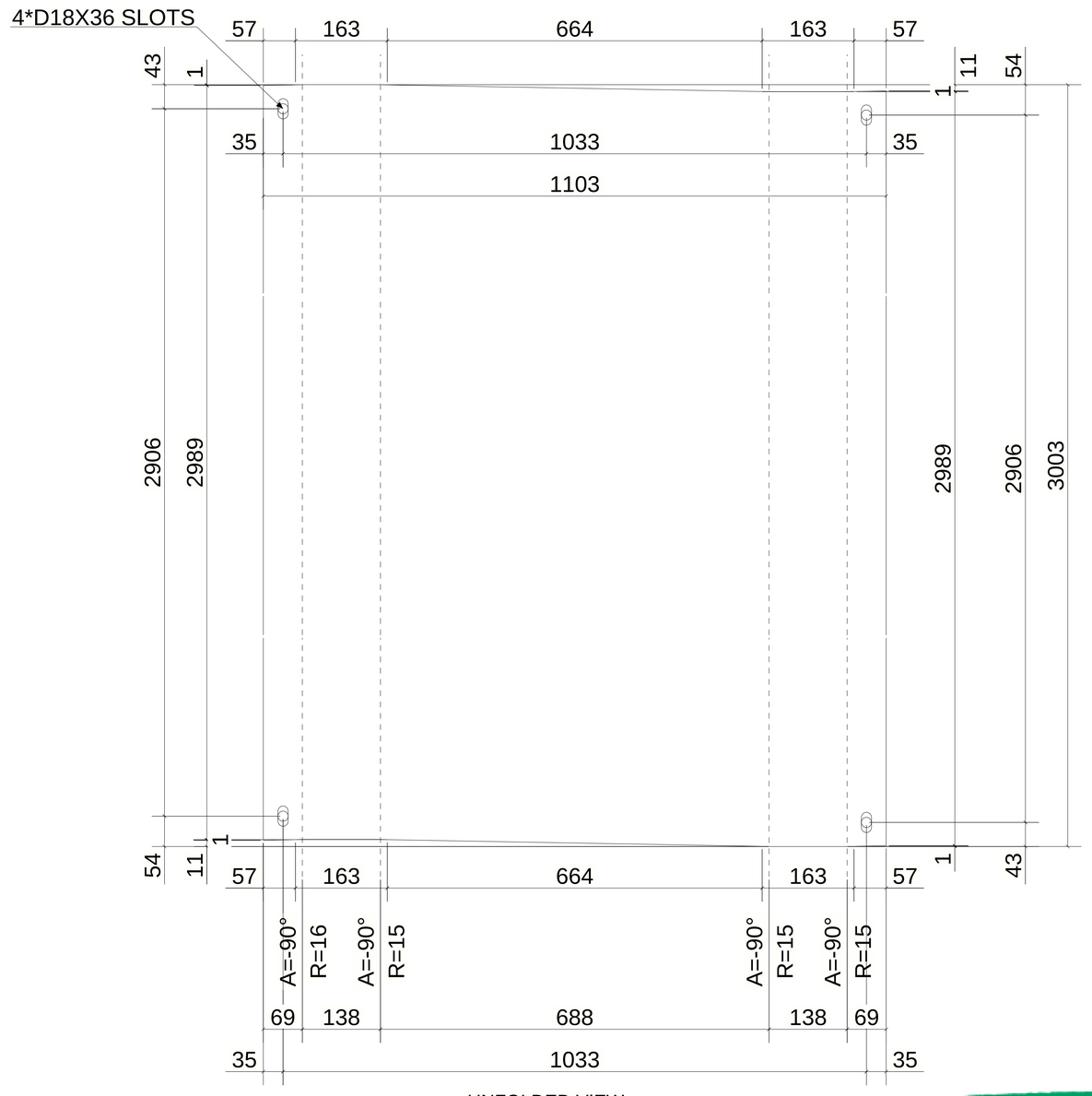

UNFOLDED VIEW

1 *REQUIRED AS DRAWN MARKED* Z16-CHQ037

6 October: Monorail
Engineering Unit
Valid For Construction

GENERAL NOTES:

1. THE DIMENSIONS SHOWN ARE NOMINAL (IN MILLIMETERS), U.N.O.
2. WELD SIZESHALL BE AISC MINIMUM OF 6 mm UNLESS NOTED OTHERWISE.
3. ALL FIELD WELDS SHALL BE INSPECTED PER QUALITY ASSURANCE AND SPECIAL INSPECTIONS.

REFERENCE DRAWINGS

1	93M-BOA-NAT-LOT-04833
2	93M-BOA-NAT-LOT-09170
3	93M-BOA-NAT-LOT-01976
4	93M-BOA-NAT-LOT-20021
5	
6	
7	
8	
9	

6TH OF OCTOBER CITY RAIL TRANSIT MONORAIL

The Authority | Consultant: Hill International | Main Contractor | Structural Designer

KEY PLAN:

SCALE: AS SHOWN | SHOP DRAWING | DATE: 08/29/2023

REV	DATE	DSG.	CHK.	APP.	AMENDMENTS	STATUS
B	08/29/2023	M.KH	M.KH	DR.M.M	ISSUED FOR INFORMATION	IFI
A	09/21/2022	M.KH	M.KH	DR.M.M	ISSUED FOR INFORMATION	IFI

DRAWING TITLE
6TH OF OCTOBER MONORAIL
SERVICE WALKWAYS
ZONE(1016)
Z16-CHQ037

Project Code	Rubric	Initiator	Lot	Ref	Number	Revision
93M	047	6ACC	60DE	PDWG	16054	B

Tekla structures

Same comments as
93M-0476-ACC-60DEP-DWG-16053-B.

REVIEWED WITH COMMENT
MONORAILS PROJECT

MATERIAL LIST FOR ASSEMBLY MK'D Z16-CHQ018						
Mark	Profile	GRADE	No.	Length	Area	Weight
Z16-CHQ018	CHQD5*1103.4	S235JR	1	3092	6.64	129.04
				Total	6.64	129.04

BOLT LIST:-

BOLT \ STUD	BOLT DESCRIPTION	QTY	FINISH
BOLT	B1N2W16 X 55 A325M	4	

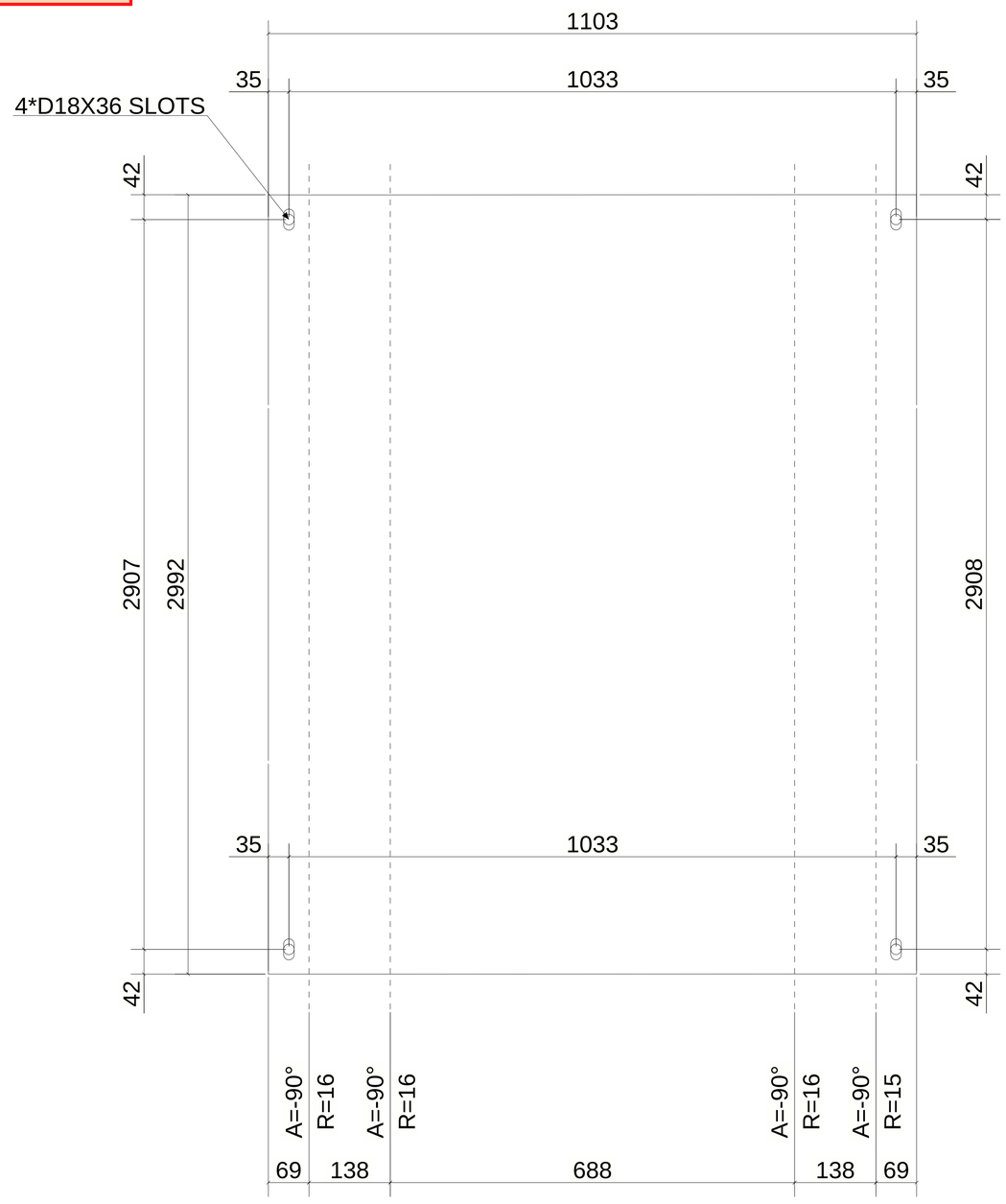

UNFOLDED VIEW

1 *REQUIRED AS DRAWN MARKED* Z16-CHQ018

6 October Monorail
Engineering Unit
Valid For Construction

GENERAL NOTES:

1. THE DIMENSIONS SHOWN ARE NOMINAL (IN MILLIMETERS), U.N.O.
2. WELD SIZESHALL BE AISC MINIMUM OF 6 mm UNLESS NOTED OTHERWISE.
3. ALL FIELD WELDS SHALL BE INSPECTED PER QUALITY ASSURANCE AND SPECIAL INSPECTIONS.

REFERENCE DRAWINGS

1	93M-BOA-NAT-LOT-04833
2	93M-BOA-NAT-LOT-09170
3	93M-BOA-NAT-LOT-01976
4	93M-BOA-NAT-LOT-20021
5	
6	
7	
8	
9	

6TH OF OCTOBER CITY RAIL TRANSIT MONORAIL

The Authority | Consultant: Hill International | Main Contractor: ORASCOM CONSTRUCTION, Six Construct, BOMBARDIER | Structural Designer: INNOVA TRANSPORTATION

KEY PLAN:

SCALE: AS SHOWN | SHOP DRAWING | DATE: 08/29/2023

REV	DATE	DSG.	CHK.	APP.	AMENDMENTS	STATUS
B	08/29/2023	M.KH	M.KH	DR.M.M	ISSUED FOR INFORMATION	IFI
A	09/21/2022	M.KH	M.KH	DR.M.M	ISSUED FOR INFORMATION	IFI

DRAWING TITLE
6TH OF OCTOBER MONORAIL
SERVICE WALKWAYS
ZONE(1016)
Z16-CHQ018

Project Code	Rubric	Initiator	Lot	Ref	Number	Revision
93M	0476	ACC	60	DEP	DWG 16055	B

Tekla structures

Same comments as
93M-0476-ACC-60DEP-DWG-16053-B.

REVIEWED WITH COMMENT
MONORAILS PROJECT

MATERIAL LIST FOR ASSEMBLY MK'D	Z16-CHQ035					
Mark	Profile	GRADE	No.	Length	Area	Weight
Z16-CHQ035	CHQD5*1103.4	S235JR	1	3080	6.62	128.66
				Total	6.62	128.66

BOLT LIST:-

BOLT \ STUD	BOLT DESCRIPTION	QTY	FINISH
BOLT	B1N2W16 X 55 A325M	4	

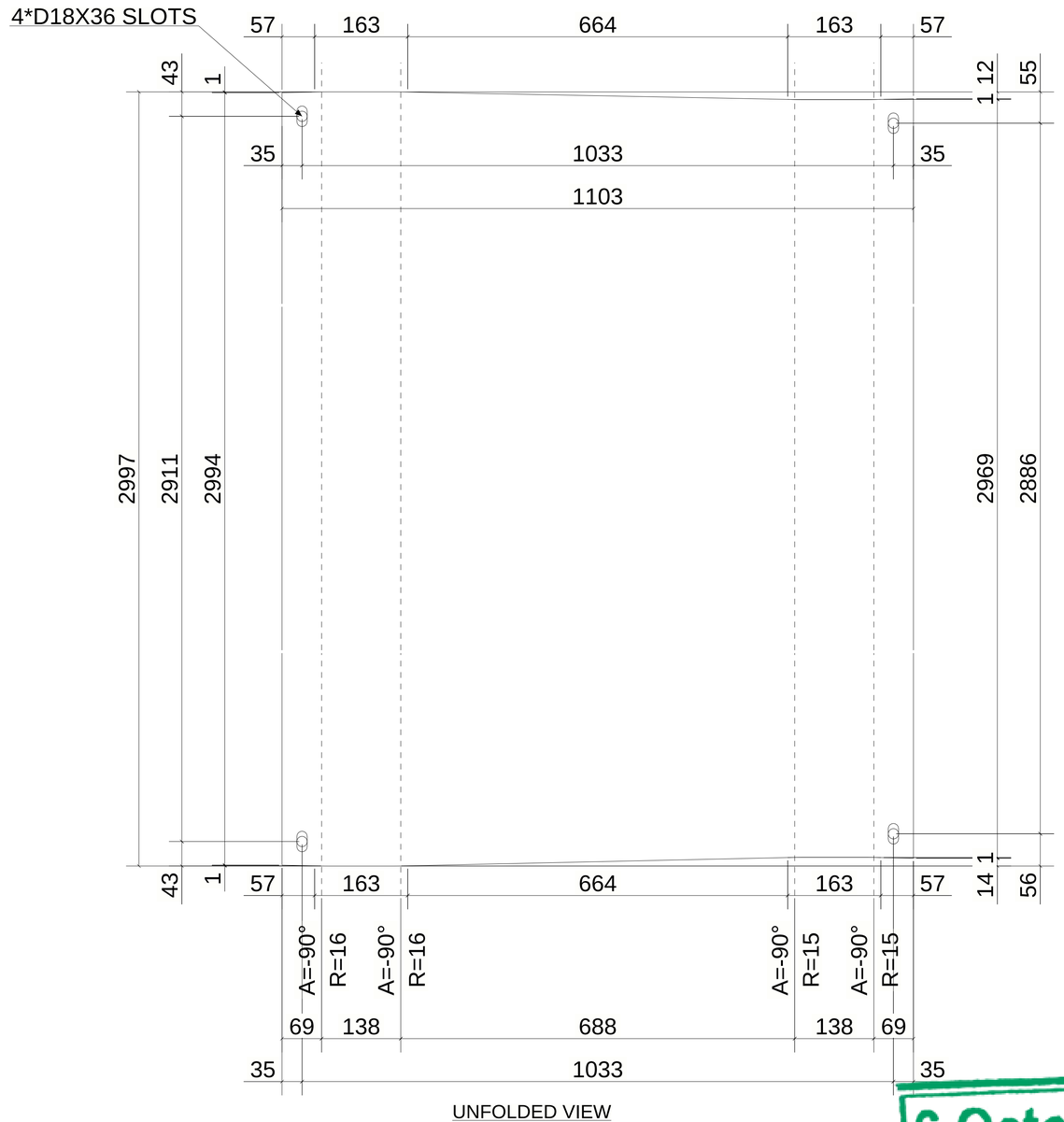

UNFOLDED VIEW

1 *REQUIRED AS DRAWN MARKED* Z16-CHQ035

6 October Monorail
Engineering Unit
Valid For Construction

GENERAL NOTES:

1. THE DIMENSIONS SHOWN ARE NOMINAL (IN MILLIMETERS), U.N.O.
2. WELD SIZESHALL BE AISC MINIMUM OF 6 mm UNLESS NOTED OTHERWISE.
3. ALL FIELD WELDS SHALL BE INSPECTED PER QUALITY ASSURANCE AND SPECIAL INSPECTIONS.

REFERENCE DRAWINGS

1	93M-BOA-NAT-LOT-04833
2	93M-BOA-NAT-LOT-09170
3	93M-BOA-NAT-LOT-01976
4	93M-BOA-NAT-LOT-20021
5	
6	
7	
8	
9	

6TH OF OCTOBER CITY RAIL TRANSIT MONORAIL

The Authority | Consultant: Hill International | Main Contractor: ORASCOM CONSTRUCTION / BOMBARDIER | Structural Designer: INNOVA TRANSPORTATION

KEY PLAN:

SCALE: AS SHOWN | SHOP DRAWING | DATE: 08/29/2023

DRAWING TITLE
6TH OF OCTOBER MONORAIL
SERVICE WALKWAYS
ZONE(1016)
Z16-CHQ035

REV	DATE	DSG.	CHK.	APP.	AMENDMENTS	STATUS
B	08/29/2023	M.KH	M.KH	DR.M.M	ISSUED FOR INFORMATION	IFI
A	09/21/2022	M.KH	M.KH	DR.M.M	ISSUED FOR INFORMATION	IFI

Project Code	Rubric	Initiator	Lot	Ref	Number	Revision
93M	0476	ACC	60DEP	DWG	16056	B

Tekla structures

Same comments as 93M-0476-ACC-60DEP-DWG-16053-B.

REVIEWED WITH COMMENT MONORAILS PROJECT

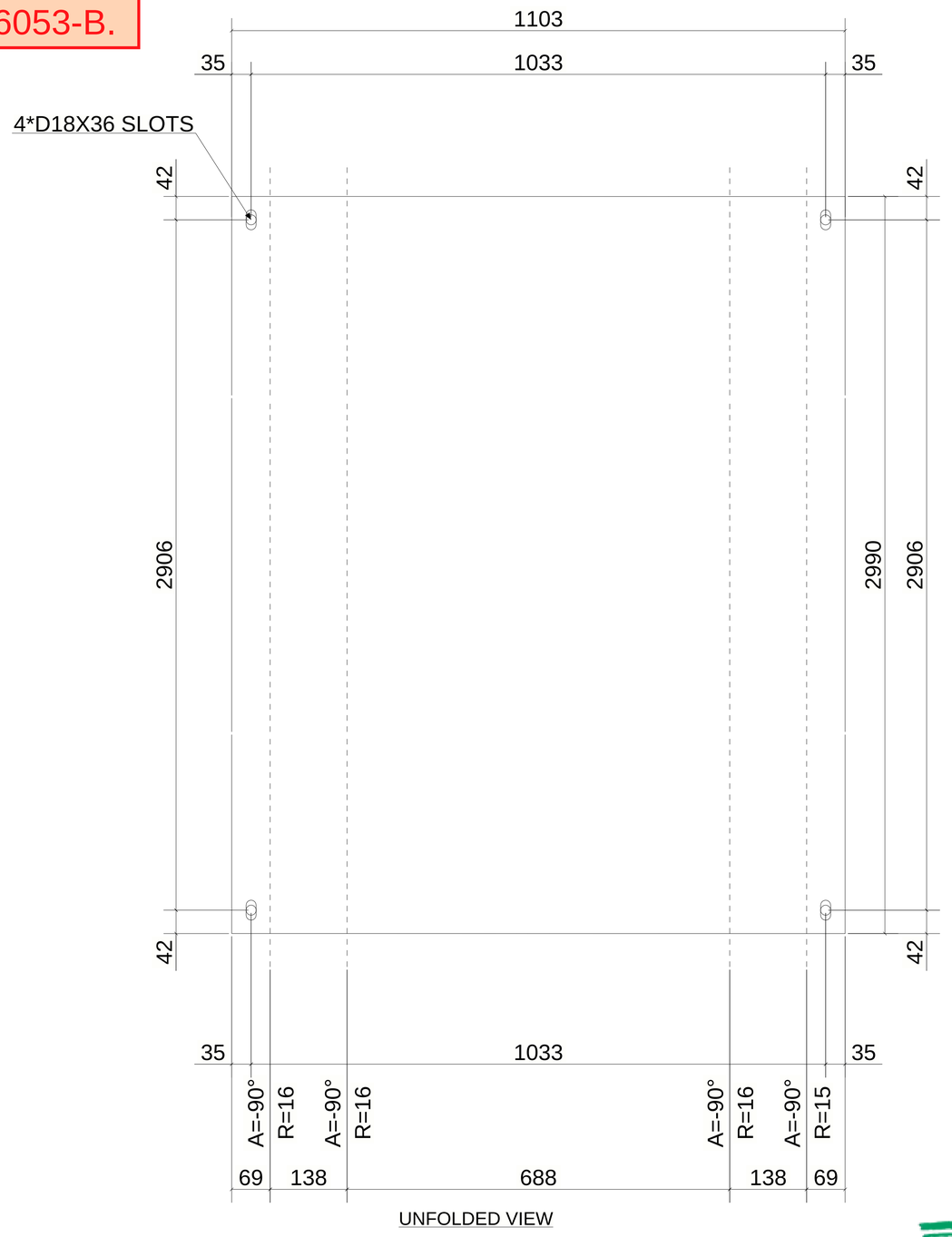

UNFOLDED VIEW

MATERIAL LIST FOR ASSEMBLY MK'D Z16-CHQ011

Mark	Profile	GRADE	No.	Length	Area	Weight
Z16-CHQ011	CHQD5*1103.4	S235JR	1	3090	6.63	128.98
				Total	6.63	128.98

BOLT LIST:-

BOLT \ STUD	BOLT DESCRIPTION	QTY	FINISH
BOLT	B1N2W16 X 55 A325M	4	

13 *REQUIRED AS DRAWN MARKED* Z16-CHQ011

6 October Monorail Engineering Unit
Valid For Construction

GENERAL NOTES:

1. THE DIMENSIONS SHOWN ARE NOMINAL (IN MILLIMETERS), U.N.O.
2. WELD SIZESHALL BE AISC MINIMUM OF 6 mm UNLESS NOTED OTHERWISE.
3. ALL FIELD WELDS SHALL BE INSPECTED PER QUALITY ASSURANCE AND SPECIAL INSPECTIONS.

REFERENCE DRAWINGS

1	93M-BOA-NAT-LOT-04833
2	93M-BOA-NAT-LOT-09170
3	93M-BOA-NAT-LOT-01976
4	93M-BOA-NAT-LOT-20021
5	
6	
7	
8	
9	

6TH OF OCTOBER CITY RAIL TRANSIT MONORAIL

The Authority | Consultant: Hill International | Main Contractor: ORASCOM CONSTRUCTION / BOMBARDIER | Structural Designer: INNOVA TRANSPORTATION

KEY PLAN:

SCALE: AS SHOWN | SHOP DRAWING | DATE: 08/29/2023

REV	DATE	DSG.	CHK.	APP.	AMENDMENTS	STATUS
B	08/29/2023	M.KH	M.KH	DR.M.M	ISSUED FOR INFORMATION	IFI
A	09/21/2022	M.KH	M.KH	DR.M.M	ISSUED FOR INFORMATION	IFI

DRAWING TITLE
6TH OF OCTOBER MONORAIL SERVICE WALKWAYS ZONE(1016)
Z16-CHQ011

Project Code	Rubric	Initiator	Lot	Ref	Number	Revision
93M	0476	ACC	60DEP	DWG	16057	B

Tekla structures

Same comments as
93M-0476-ACC-60DEP-DWG-16053-B.

REVIEWED WITH COMMENT
MONORAILS PROJECT

MATERIAL LIST FOR ASSEMBLY MK'D Z16-CHQ023

Mark	Profile	GRADE	No.	Length	Area	Weight
Z16-CHQ023	CHQD5*1103.4	S235JR	1	3091	6.64	129.07
				Total	6.64	129.07

BOLT LIST:-

BOLT \ STUD	BOLT DESCRIPTION	QTY	FINISH
BOLT	B1N2W16 X 55 A325M	4	

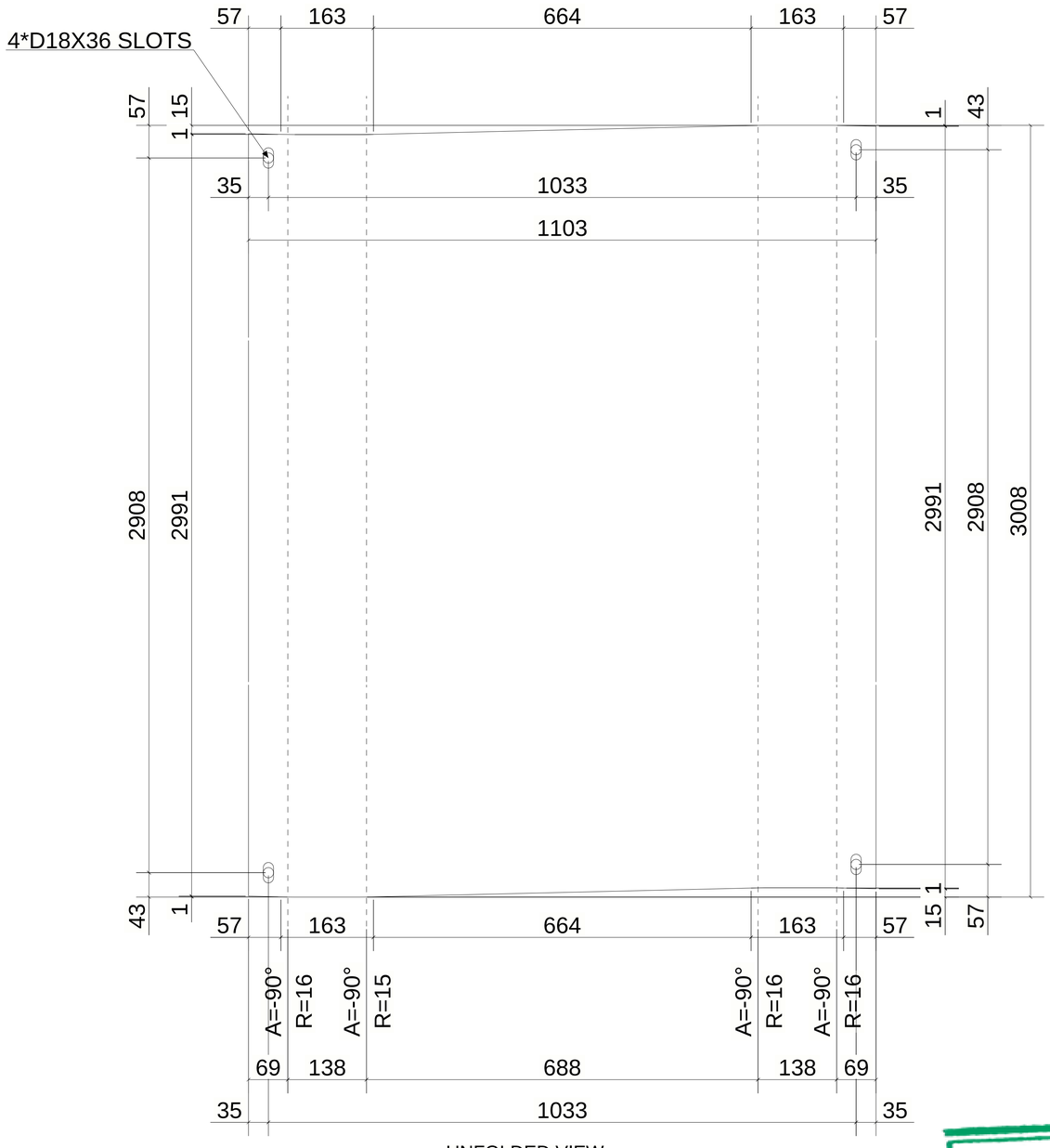

UNFOLDED VIEW

1 *REQUIRED AS DRAWN MARKED* Z16-CHQ023

6 October: Monorail
Engineering Unit
Valid For Construction

GENERAL NOTES:

1. THE DIMENSIONS SHOWN ARE NOMINAL (IN MILLIMETERS), U.N.O.
2. WELD SIZESHALL BE AISC MINIMUM OF 6 mm UNLESS NOTED OTHERWISE.
3. ALL FIELD WELDS SHALL BE INSPECTED PER QUALITY ASSURANCE AND SPECIAL INSPECTIONS.

REFERENCE DRAWINGS

1	93M-BOA-NAT-LOT-04833
2	93M-BOA-NAT-LOT-09170
3	93M-BOA-NAT-LOT-01976
4	93M-BOA-NAT-LOT-20021
5	
6	
7	
8	
9	

6TH OF OCTOBER CITY RAIL TRANSIT MONORAIL

The Authority — Consultant: Hill International — Main Contractor: ORASCOM CONSTRUCTION / BOMBARDIER — Structural Designer: INNOVA TRANSPORTATION

KEY PLAN:

SCALE: AS SHOWN | SHOP DRAWING | DATE: 08/29/2023

REV	DATE	DSG.	CHK.	APP.	AMENDMENTS	STATUS
B	08/29/2023	M.KH	M.KH	DR.M.M	ISSUED FOR INFORMATION	IFI
A	09/21/2022	M.KH	M.KH	DR.M.M	ISSUED FOR INFORMATION	IFI

DRAWING TITLE
6TH OF OCTOBER MONORAIL
SERVICE WALKWAYS
ZONE(1016)
Z16-CHQ023

Project Code	Rubric	Initiator	Lot	Ref	Number	Revision
93M	047	6ACC	60DE	PDWG	16058	B

Tekla structures

Same comments as
93M-0476-ACC-60DEP-DWG-16053-B.

REVIEWED WITH COMMENT
MONORAILS PROJECT

MATERIAL LIST FOR ASSEMBLY MK'D Z16-CHQ025						
Mark	Profile	GRADE	No.	Length	Area	Weight
Z16-CHQ025	CHQD5*1103.4	S235JR	1	1595	3.33	64.56
				Total	3.33	64.56

BOLT LIST:-

BOLT \ STUD	BOLT DESCRIPTION	QTY	FINISH
BOLT	B1N2W16 X 55 A325M	4	

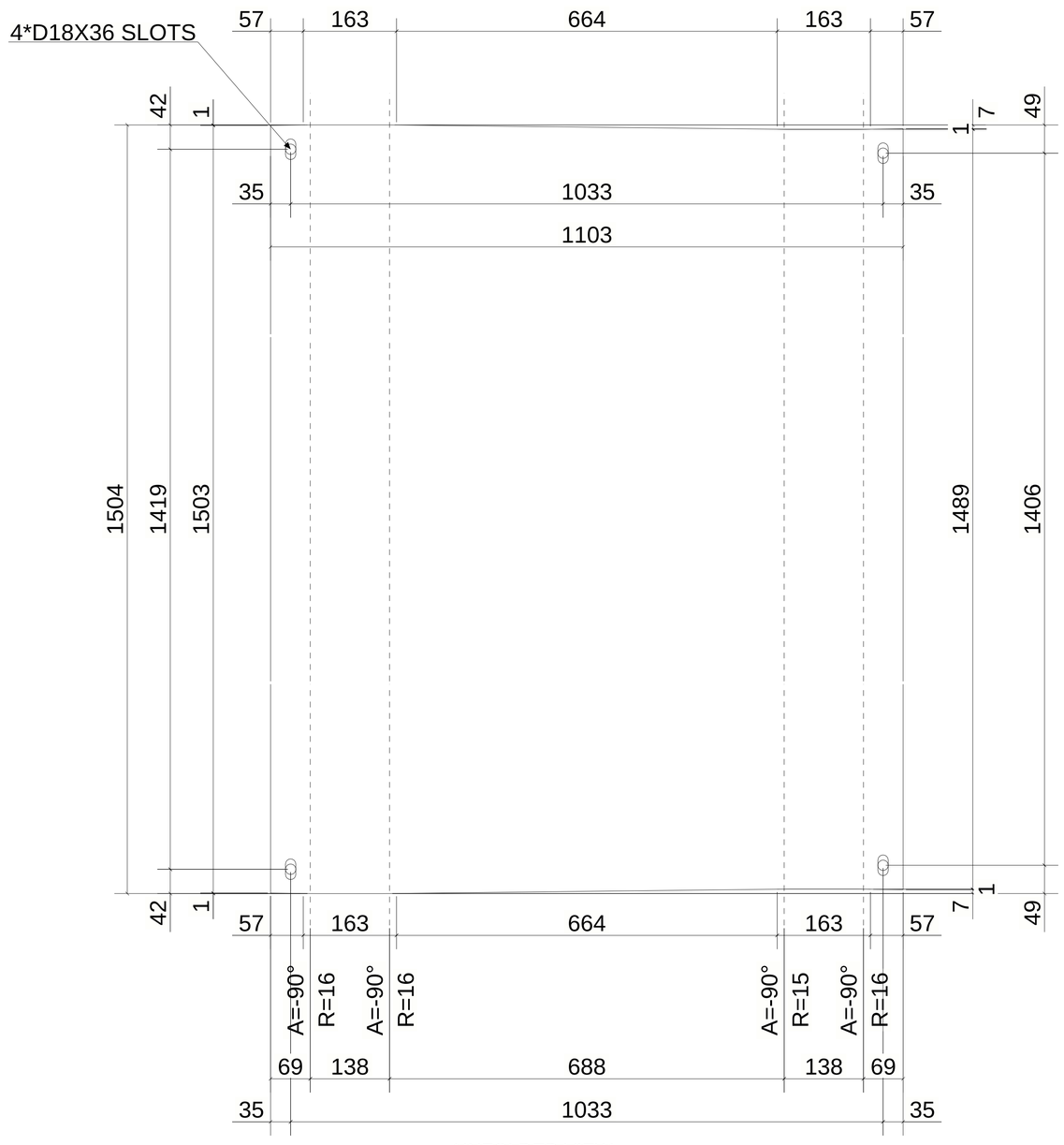

UNFOLDED VIEW

2 *REQUIRED AS DRAWN MARKED* Z16-CHQ025

6 October Monorail
Engineering Unit
Valid For Construction

GENERAL NOTES:

1. THE DIMENSIONS SHOWN ARE NOMINAL (IN MILLIMETERS), U.N.O.
2. WELD SIZESHALL BE AISC MINIMUM OF 6 mm UNLESS NOTED OTHERWISE.
3. ALL FIELD WELDS SHALL BE INSPECTED PER QUALITY ASSURANCE AND SPECIAL INSPECTIONS.

REFERENCE DRAWINGS

1	93M-BOA-NAT-LOT-04833
2	93M-BOA-NAT-LOT-09170
3	93M-BOA-NAT-LOT-01976
4	93M-BOA-NAT-LOT-20021
5	
6	
7	
8	
9	

6TH OF OCTOBER CITY RAIL TRANSIT MONORAIL

The Authority | Consultant: Hill International | Main Contractor: ORASCOM CONSTRUCTION, BOMBARDIER | Structural Designer: INNOVA TRANSPORTATION

KEY PLAN:

SCALE: AS SHOWN | SHOPDRAWING | DATE: 08/29/2023

REV	DATE	DSG.	CHK.	APP.	AMENDMENTS	STATUS
B	08/29/2023	M.KH	M.KH	DR.M.M	ISSUED FOR INFORMATION	IFI
A	09/21/2022	M.KH	M.KH	DR.M.M	ISSUED FOR INFORMATION	IFI

DRAWING TITLE
6TH OF OCTOBER MONORAIL
SERVICE WALKWAYS
ZONE(1016)
Z16-CHQ025

Project Code	Rubric	Initiator	Lot	Ref	Number	Revision
93M	047	6ACC	60DEP	DWG	16059	B

Tekla structures

Same comments as
93M-0476-ACC-60DEP-DWG-16053-B.

REVIEWED WITH COMMENT
MONORAILS PROJECT

MATERIAL LIST FOR ASSEMBLY MK'D Z16-CHQ043

Mark	Profile	GRADE	No.	Length	Area	Weight
Z16-CHQ043	CHQD5*1103.4	S235JR	1	3090	6.63	129.00
				Total	6.63	129.00

BOLT LIST:-

BOLT \ STUD	BOLT DESCRIPTION	QTY	FINISH
BOLT	B1N2W16 X 55 A325M	4	

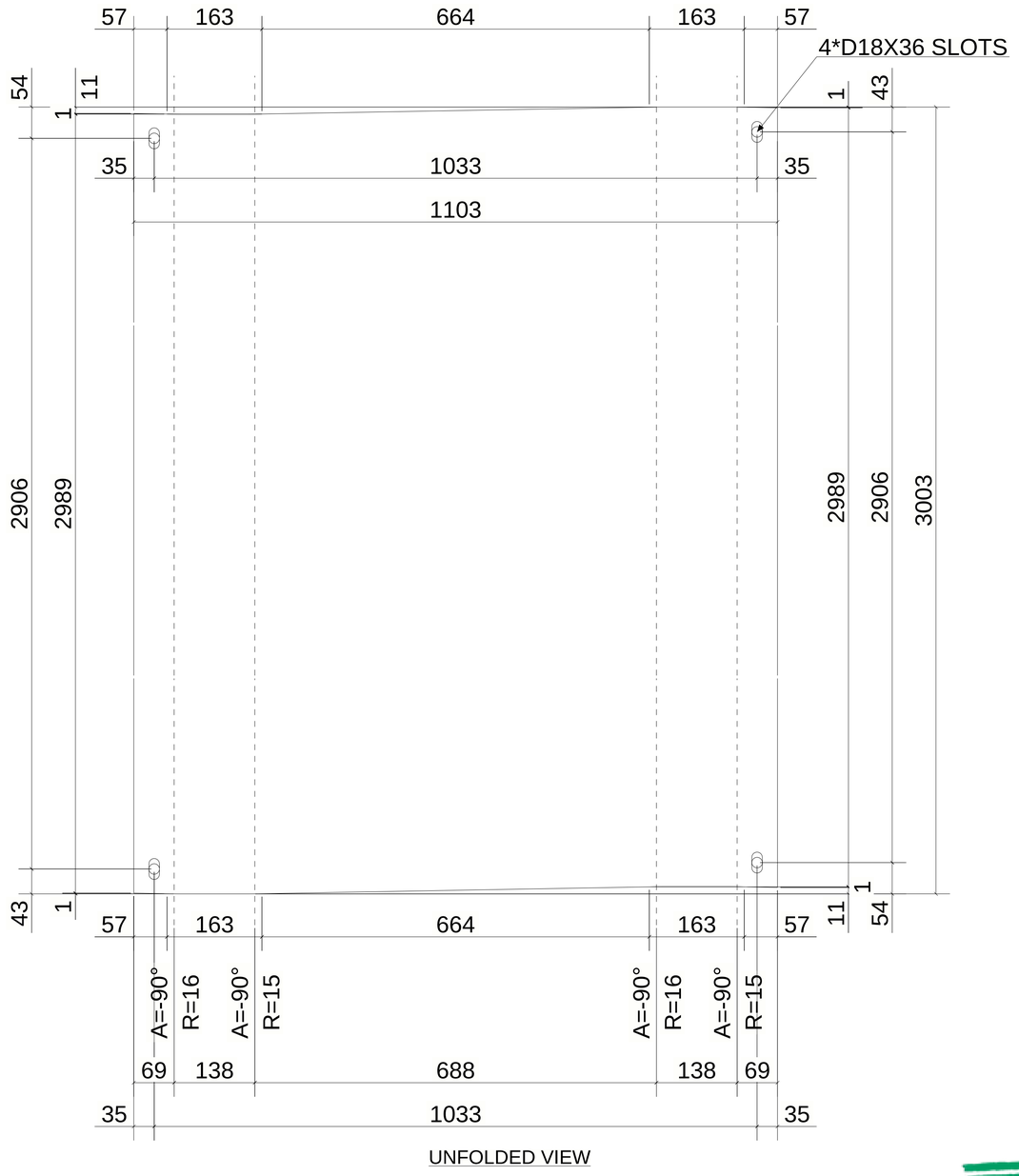

UNFOLDED VIEW

2 *REQUIRED AS DRAWN MARKED* Z16-CHQ043

6 October Monorail
Engineering Unit
Valid For Construction

GENERAL NOTES:

1. THE DIMENSIONS SHOWN ARE NOMINAL (IN MILLIMETERS), U.N.O.
2. WELD SIZESHALL BE AISC MINIMUM OF 6 mm UNLESS NOTED OTHERWISE.
3. ALL FIELD WELDS SHALL BE INSPECTED PER QUALITY ASSURANCE AND SPECIAL INSPECTIONS.

REFERENCE DRAWINGS

1	93M-BOA-NAT-LOT-04833
2	93M-BOA-NAT-LOT-09170
3	93M-BOA-NAT-LOT-01976
4	93M-BOA-NAT-LOT-20021
5	
6	
7	
8	
9	

6TH OF OCTOBER CITY RAIL TRANSIT MONORAIL

The Authority | Consultant: Hill International | Main Contractor: ORASCOM CONSTRUCTION / BOMBARDIER / Six Tech Contractors | Structural Designer: INNOVA TRANSPORTATION

KEY PLAN:

SCALE: AS SHOWN | SHOP DRAWING | DATE: 08/29/2023

REV.	DATE	DSG.	CHK.	APP.	AMENDMENTS	STATUS
B	08/29/2023	M.KH	M.KH	DR.M.M	ISSUED FOR INFORMATION	IFI
A	09/21/2022	M.KH	M.KH	DR.M.M	ISSUED FOR INFORMATION	IFI

DRAWING TITLE
6TH OF OCTOBER MONORAIL
SERVICE WALKWAYS
ZONE(1016)
Z16-CHQ043

Project Code	Rubric	Initiator	Lot	Ref	Number	Revision
93M	0476	ACC	60DEP	DWG	16060	B

Tekla structures

Same comments as
93M-0476-ACC-60DEP-DWG-16053-B.

REVIEWED WITH COMMENT
MONORAILS PROJECT

MATERIAL LIST FOR ASSEMBLY MK'D Z16-CHQ010

Mark	Profile	GRADE	No.	Length	Area	Weight
Z16-CHQ010	CHQD5*1103.4	S235JR	1	3087	6.63	128.85
				Total	6.63	128.85

BOLT LIST:-

BOLT \ STUD	BOLT DESCRIPTION	QTY	FINISH
BOLT	B1N2W16 X 55 A325M	4	

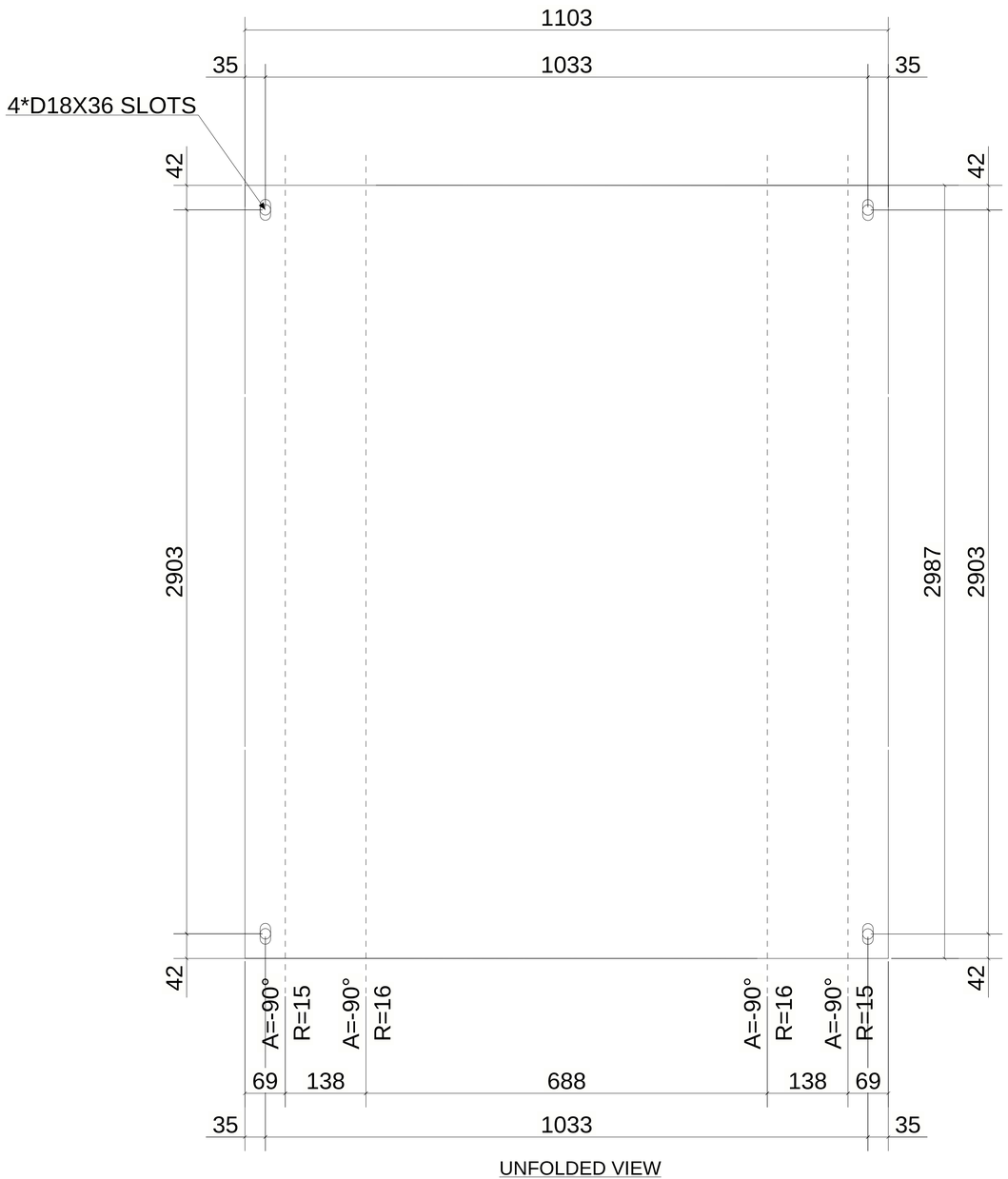

UNFOLDED VIEW

2 *REQUIRED AS DRAWN MARKED* Z16-CHQ010

6 October Monorail
Engineering Unit
Valid For Construction

GENERAL NOTES:

1. THE DIMENSIONS SHOWN ARE NOMINAL (IN MILLIMETERS), U.N.O.
2. WELD SIZESHALL BE AISC MINIMUM OF 6 mm UNLESS NOTED OTHERWISE.
3. ALL FIELD WELDS SHALL BE INSPECTED PER QUALITY ASSURANCE AND SPECIAL INSPECTIONS.

REFERENCE DRAWINGS

1	93M-BOA-NAT-LOT-04833
2	93M-BOA-NAT-LOT-09170
3	93M-BOA-NAT-LOT-01976
4	93M-BOA-NAT-LOT-20021
5	
6	
7	
8	
9	

6TH OF OCTOBER CITY RAIL TRANSIT MONORAIL

The Authority | Consultant: Hill International | Main Contractor: ORASCOM CONSTRUCTION / BOMBARDIER | Structural Designer: INNOVA TRANSPORTATION

KEY PLAN:

SCALE: AS SHOWN | SHOP DRAWING | DATE: 08/29/2023

REV	DATE	DSG.	CHK.	APP.	AMENDMENTS	STATUS
B	08/29/2023	M.KH	M.KH	DR.M.M	ISSUED FOR INFORMATION	IFI
A	09/21/2022	M.KH	M.KH	DR.M.M	ISSUED FOR INFORMATION	IFI

DRAWING TITLE
6TH OF OCTOBER MONORAIL
SERVICE WALKWAYS
ZONE(1016)
Z16-CHQ010

Project Code	Rubric	Initiator	Lot	Ref	Number	Revision
93M	047	6ACC	60DEP	DWG	16061	B

Tekla structures

Same comments as
93M-0476-ACC-60DEP-DWG-16053-B.

REVIEWED WITH COMMENT
MONORAILS PROJECT

MATERIAL LIST FOR ASSEMBLY MK'D Z16-CHQ006						
Mark	Profile	GRADE	No.	Length	Area	Weight
Z16-CHQ006	CHQD5*1103.4	S235JR	1	2588	5.52	107.39
				Total	5.52	107.39

BOLT LIST:-

BOLT \ STUD	BOLT DESCRIPTION	QTY	FINISH
BOLT	B1N2W16 X 55 A325M	4	

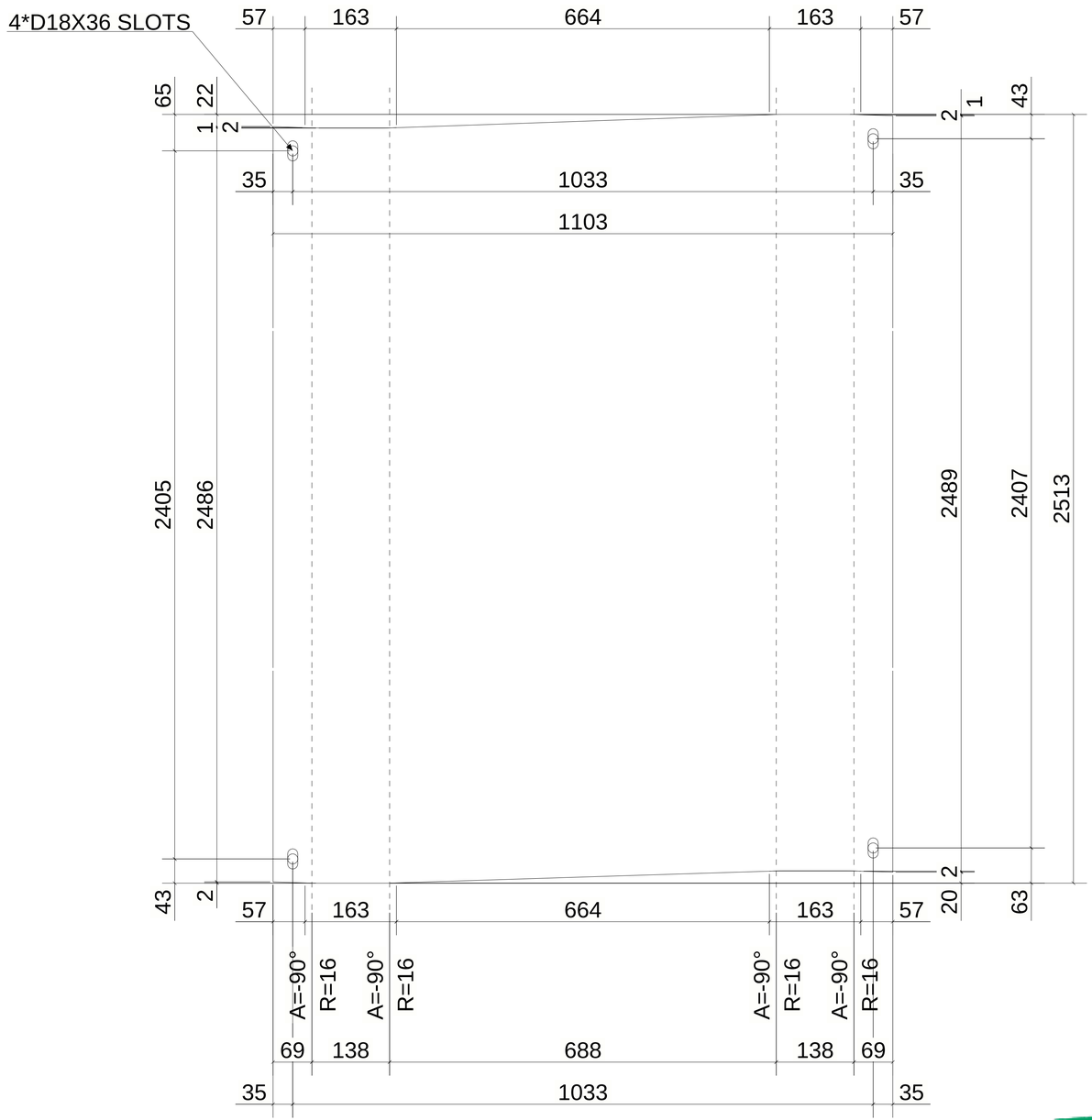

UNFOLDED VIEW

1 *REQUIRED AS DRAWN MARKED* Z16-CHQ006

6 October Monorail
Engineering Unit
Valid For Construction

GENERAL NOTES:

1. THE DIMENSIONS SHOWN ARE NOMINAL (IN MILLIMETERS), U.N.O.
2. WELD SIZESHALL BE AISC MINIMUM OF 6 mm UNLESS NOTED OTHERWISE.
3. ALL FIELD WELDS SHALL BE INSPECTED PER QUALITY ASSURANCE AND SPECIAL INSPECTIONS.

REFERENCE DRAWINGS

1	93M-BOA-NAT-LOT-04833
2	93M-BOA-NAT-LOT-09170
3	93M-BOA-NAT-LOT-01976
4	93M-BOA-NAT-LOT-20021
5	
6	
7	
8	
9	

6TH OF OCTOBER CITY RAIL TRANSIT MONORAIL

The Authority | Consultant: Hill International | Main Contractor: ORASCOM CONSTRUCTION, BOMBARDIER | Structural Designer: INNOVA TRANSPORTATION

KEY PLAN:

SCALE: AS SHOWN | SHOP DRAWING | DATE: 08/29/2023

REV	DATE	DSG.	CHK.	APP.	AMENDMENTS	STATUS
B	08/29/2023	M.KH	M.KH	DR.M.M	ISSUED FOR INFORMATION	IFI
A	09/21/2022	M.KH	M.KH	DR.M.M	ISSUED FOR INFORMATION	IFI

DRAWING TITLE
6TH OF OCTOBER MONORAIL
SERVICE WALKWAYS
ZONE(1016)
Z16-CHQ006

Project Code	Rubric	Initiator	Lot	Ref	Number	Revision
93M	047	6ACC	60DE	PDWG	16062	B

Tekla structures

Same comments as 93M-0476-ACC-60DEP-DWG-16053-B.

REVIEWED WITH COMMENT
MONORAILS PROJECT

MATERIAL LIST FOR ASSEMBLY MK'D Z16-CHQ033						
Mark	Profile	GRADE	No.	Length	Area	Weight
Z16-CHQ033	CHQD5*1103.4	S235JR	1	2321	4.93	95.86
				Total	4.93	95.86

BOLT LIST:-

BOLT \ STUD	BOLT DESCRIPTION	QTY	FINISH
BOLT	B1N2W16 X 55 A325M	4	

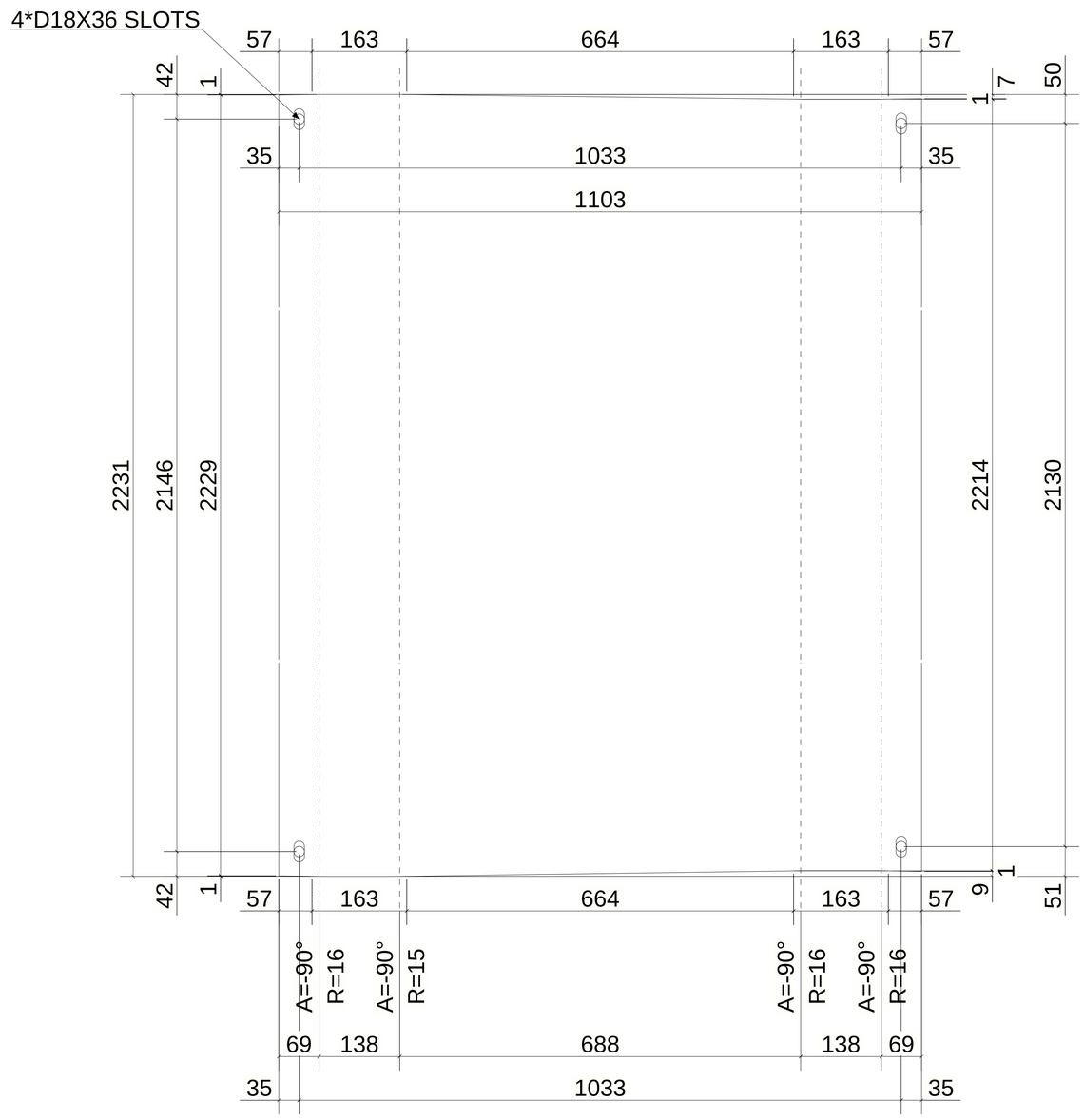

UNFOLDED VIEW

1 *REQUIRED AS DRAWN MARKED* Z16-CHQ033

6 October Monorail
Engineering Unit
Valid For Construction

GENERAL NOTES:

1. THE DIMENSIONS SHOWN ARE NOMINAL (IN MILLIMETERS), U.N.O.
2. WELD SIZESHALL BE AISC MINIMUM OF 6 mm UNLESS NOTED OTHERWISE.
3. ALL FIELD WELDS SHALL BE INSPECTED PER QUALITY ASSURANCE AND SPECIAL INSPECTIONS.

REFERENCE DRAWINGS

1	93M-BOA-NAT-LOT-04833
2	93M-BOA-NAT-LOT-09170
3	93M-BOA-NAT-LOT-01976
4	93M-BOA-NAT-LOT-20021
5	
6	
7	
8	
9	

6TH OF OCTOBER CITY RAIL TRANSIT MONORAIL

The Authority | Hill International Consultant | ORASCOM BOMBARDIER Main Contractor | INNOVA TRANSPORTATION Structural Designer

KEY PLAN:

SCALE: AS SHOWN | SHOP DRAWING | DATE: 08/29/2023

REV	DATE	DSG.	CHK.	APP.	AMENDMENTS	STATUS
B	08/29/2023	M.KH	M.KH	DR.M.M	ISSUED FOR INFORMATION	IFI
A	09/21/2022	M.KH	M.KH	DR.M.M	ISSUED FOR INFORMATION	IFI

DRAWING TITLE
6TH OF OCTOBER MONORAIL
SERVICE WALKWAYS
ZONE(1016)
Z16-CHQ033

Project Code	Rubric	Initiator	Lot	Ref	Number	Revision
93M	0476	ACC	60DEP	DWG	16063	B

Tekla structures

Same comments as
93M-0476-ACC-60DEP-DWG-16053-B.

REVIEWED WITH COMMENT
MONORAILS PROJECT

MATERIAL LIST FOR ASSEMBLY MK'D Z16-CHQ036

Mark	Profile	GRADE	No.	Length	Area	Weight
Z16-CHQ036	CHQD5*1103.4	S235JR	1	3088	6.63	128.91
				Total	6.63	128.91

BOLT LIST:-

BOLT \ STUD	BOLT DESCRIPTION	QTY	FINISH
BOLT	B1N2W16 X 55 A325M	4	

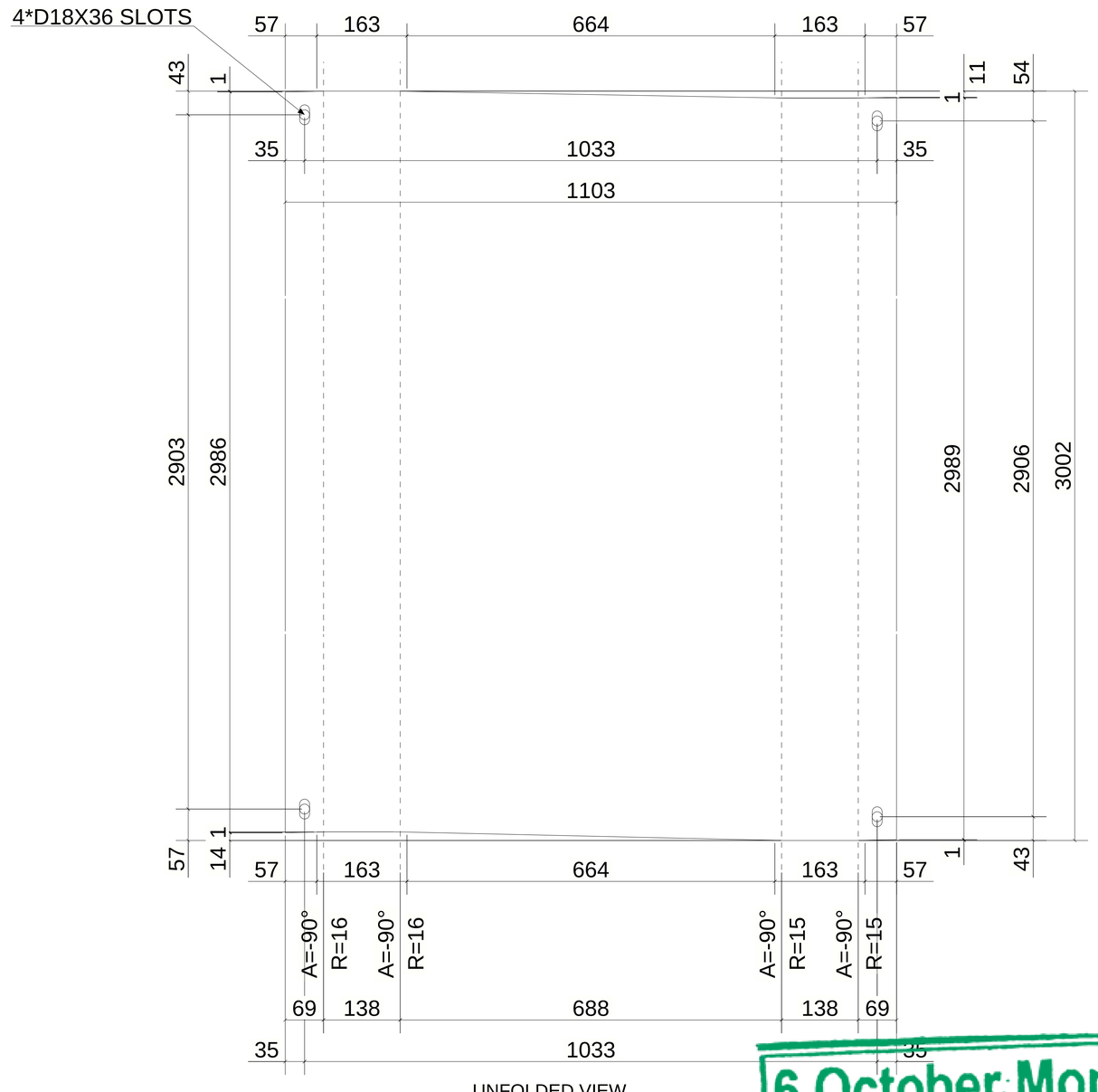

UNFOLDED VIEW

1 *REQUIRED AS DRAWN MARKED* Z16-CHQ036

6 October Monorail
Engineering Unit
Valid For Construction

GENERAL NOTES:

1. THE DIMENSIONS SHOWN ARE NOMINAL (IN MILLIMETERS), U.N.O.
2. WELD SIZESHALL BE AISC MINIMUM OF 6 mm UNLESS NOTED OTHERWISE.
3. ALL FIELD WELDS SHALL BE INSPECTED PER QUALITY ASSURANCE AND SPECIAL INSPECTIONS.

REFERENCE DRAWINGS

1	93M-BOA-NAT-LOT-04833
2	93M-BOA-NAT-LOT-09170
3	93M-BOA-NAT-LOT-01976
4	93M-BOA-NAT-LOT-20021
5	
6	
7	
8	
9	

6TH OF OCTOBER CITY RAIL TRANSIT MONORAIL

The Authority | Consultant: Hill International | Main Contractor: ORASCOM CONSTRUCTION / BOMBARDIER | Structural Designer: INNOVA TRANSPORTATION

KEY PLAN:

SCALE: AS SHOWN | SHOP DRAWING | DATE: 08/29/2023

REV	DATE	DSG.	CHK.	APP.	AMENDMENTS	STATUS
B	08/29/2023	M.KH	M.KH	DR.M.M	ISSUED FOR INFORMATION	IFI
A	09/21/2022	M.KH	M.KH	DR.M.M	ISSUED FOR INFORMATION	IFI

DRAWING TITLE
6TH OF OCTOBER MONORAIL
SERVICE WALKWAYS
ZONE(1016)
Z16-CHQ036

Project Code	Rubric	Initiator	Lot	Ref	Number	Revision
93M	047	6ACC	60DEP	DWG	16064	B

Tekla structures

Same comments as
93M-0476-ACC-60DEP-DWG-16053-B.

REVIEWED WITH COMMENT
MONORAILS PROJECT

MATERIAL LIST FOR ASSEMBLY MK'D Z16-CHQ019						
Mark	Profile	GRADE	No.	Length	Area	Weight
Z16-CHQ019	CHQD5*1103.4	S235JR	1	3091	6.63	129.00
				Total	6.63	129.00

BOLT LIST:-

BOLT \ STUD	BOLT DESCRIPTION	QTY	FINISH
BOLT	B1N2W16 X 55 A325M	4	

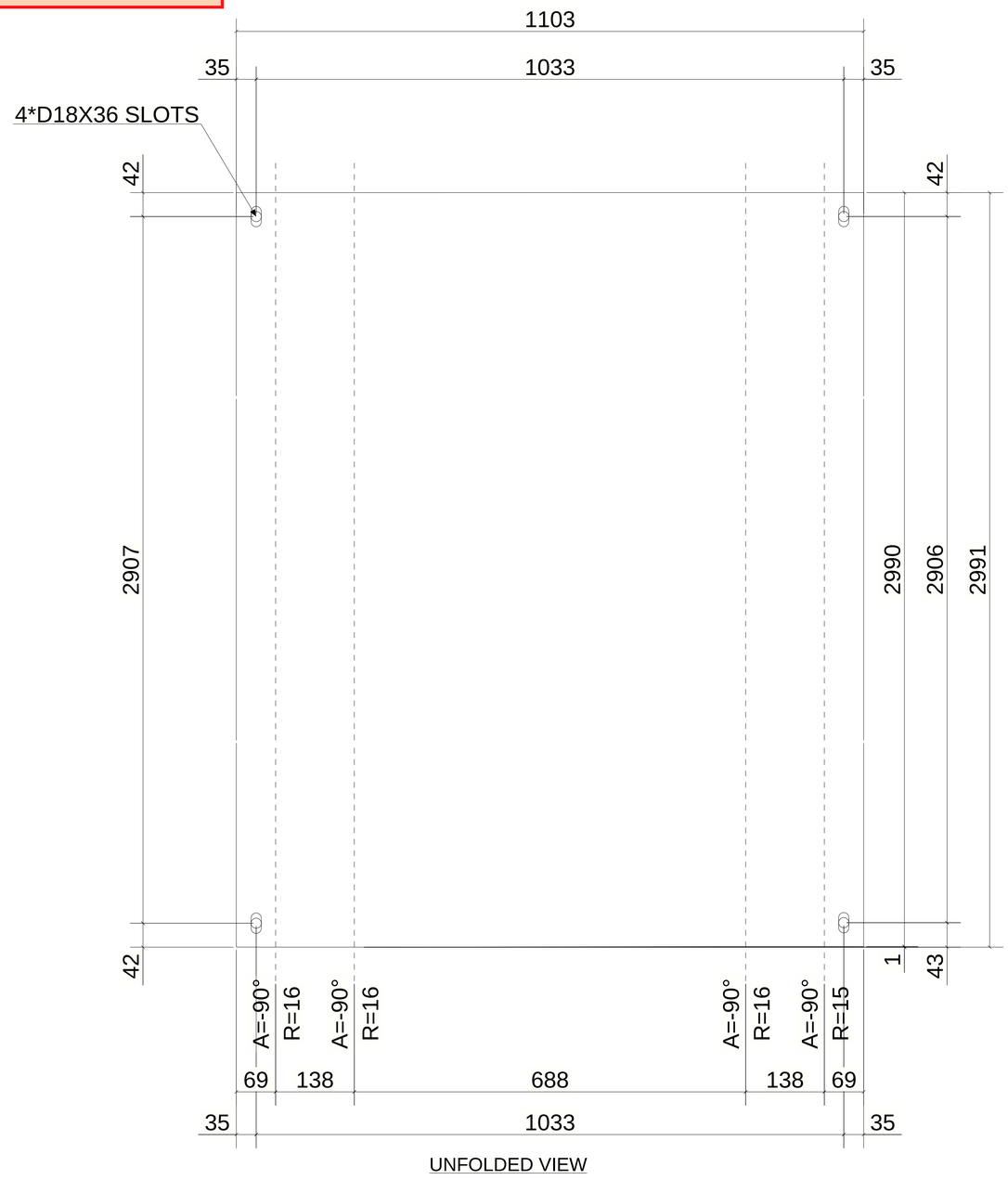

UNFOLDED VIEW

1 *REQUIRED AS DRAWN MARKED* Z16-CHQ019

6 October Monorail
Engineering Unit
Valid For Construction

GENERAL NOTES:

1. THE DIMENSIONS SHOWN ARE NOMINAL (IN MILLIMETERS), U.N.O.
2. WELD SIZESHALL BE AISC MINIMUM OF 6 mm UNLESS NOTED OTHERWISE.
3. ALL FIELD WELDS SHALL BE INSPECTED PER QUALITY ASSURANCE AND SPECIAL INSPECTIONS.

REFERENCE DRAWINGS

1	93M-BOA-NAT-LOT-04833
2	93M-BOA-NAT-LOT-09170
3	93M-BOA-NAT-LOT-01976
4	93M-BOA-NAT-LOT-20021
5	
6	
7	
8	
9	

6TH OF OCTOBER CITY RAIL TRANSIT MONORAIL

The Authority | Consultant: Hill International | Main Contractor: ORASCOM CONSTRUCTION / BOMBARDIER | Structural Designer: INNOVA TRANSPORTATION

KEY PLAN:

SCALE: AS SHOWN | SHOP DRAWING | DATE: 08/29/2023

REV	DATE	DSG.	CHK.	APP.	AMENDMENTS	STATUS
B	08/29/2023	M.KH	M.KH	DR.M.M	ISSUED FOR INFORMATION	IFI
A	09/21/2022	M.KH	M.KH	DR.M.M	ISSUED FOR INFORMATION	IFI

DRAWING TITLE
6TH OF OCTOBER MONORAIL
SERVICE WALKWAYS
ZONE(1016)
Z16-CHQ019

Project Code	Rubric	Initiator	Lot	Ref	Number	Revision
93M	0476	ACC	60DEP	DWG	16065	B

Tekla structures

Same comments as
93M-0476-ACC-60DEP-DWG-16053-B.

REVIEWED WITH COMMENT
MONORAILS PROJECT

MATERIAL LIST FOR ASSEMBLY MK'D Z16-CHQ013

Mark	Profile	GRADE	No.	Length	Area	Weight
Z16-CHQ013	CHQD5*1103.4	S235JR	1	2467	5.26	102.21
				Total	5.26	102.21

BOLT LIST:-

BOLT \ STUD	BOLT DESCRIPTION		QTY	FINISH
BOLT	B1N2W16 X 50	A325M	2	
BOLT	B1N2W16 X 55	A325M	2	

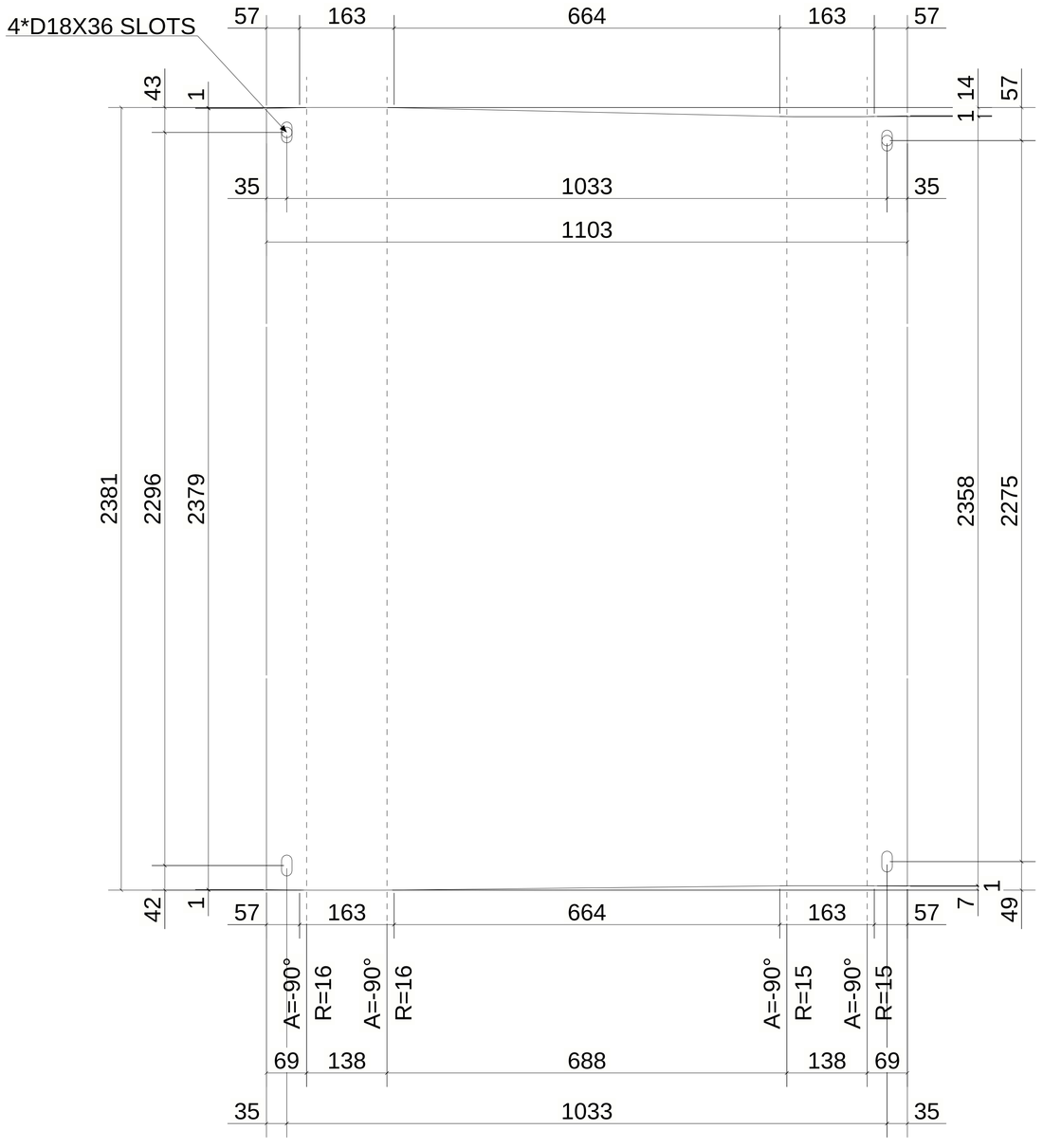

UNFOLDED VIEW

1 *REQUIRED AS DRAWN MARKED* Z16-CHQ013

6 October Monorail
Engineering Unit
Valid For Construction

GENERAL NOTES:

1. THE DIMENSIONS SHOWN ARE NOMINAL (IN MILLIMETERS), U.N.O.
2. WELD SIZESHALL BE AISC MINIMUM OF 6 mm UNLESS NOTED OTHERWISE.
3. ALL FIELD WELDS SHALL BE INSPECTED PER QUALITY ASSURANCE AND SPECIAL INSPECTIONS.

REFERENCE DRAWINGS

1	93M-BOA-NAT-LOT-04833
2	93M-BOA-NAT-LOT-09170
3	93M-BOA-NAT-LOT-01976
4	93M-BOA-NAT-LOT-20021
5	
6	
7	
8	
9	

6TH OF OCTOBER CITY RAIL TRANSIT MONORAIL

The Authority | Consultant: Hill International | Main Contractor: ORASCOM CONSTRUCTION, BOMBARDIER | Structural Designer: INNOVA TRANSPORTATION

KEY PLAN:

SCALE: AS SHOWN | SHOP DRAWING | DATE: 08/29/2023

REV.	DATE	DSG.	CHK.	APP.	AMENDMENTS	STATUS
B	08/29/2023	M.KH	M.KH	DR.M.M	ISSUED FOR INFORMATION	IFI
A	09/21/2022	M.KH	M.KH	DR.M.M	ISSUED FOR INFORMATION	IFI

DRAWING TITLE
6TH OF OCTOBER MONORAIL
SERVICE WALKWAYS
ZONE(1016)
Z16-CHQ013

Project Code	Rubric	Initiator	Lot	Ref	Number	Revision
93	M047	6ACC	60DEP	DWG	160666	B

Tekla structures

Approval is subject to approval of coordination package between multi-discipline.

REVIEWED WITH COMMENT
MONORAILS PROJECT

MATERIAL LIST FOR ASSEMBLY MK'D Z16-CHQ039						
Mark	Profile	GRADE	No.	Length	Area	Weight
Z16-CHQ039	CHQD_PL5*917.1	S235JR	1	1500	1.93	37.34
				Total	1.93	37.34

BOLT LIST:-

BOLT \ STUD	BOLT DESCRIPTION		QTY	FINISH
BOLT	B1N2W16 X 45	A325M	4	
BOLT	B1N2W16 X 50	A325M	2	

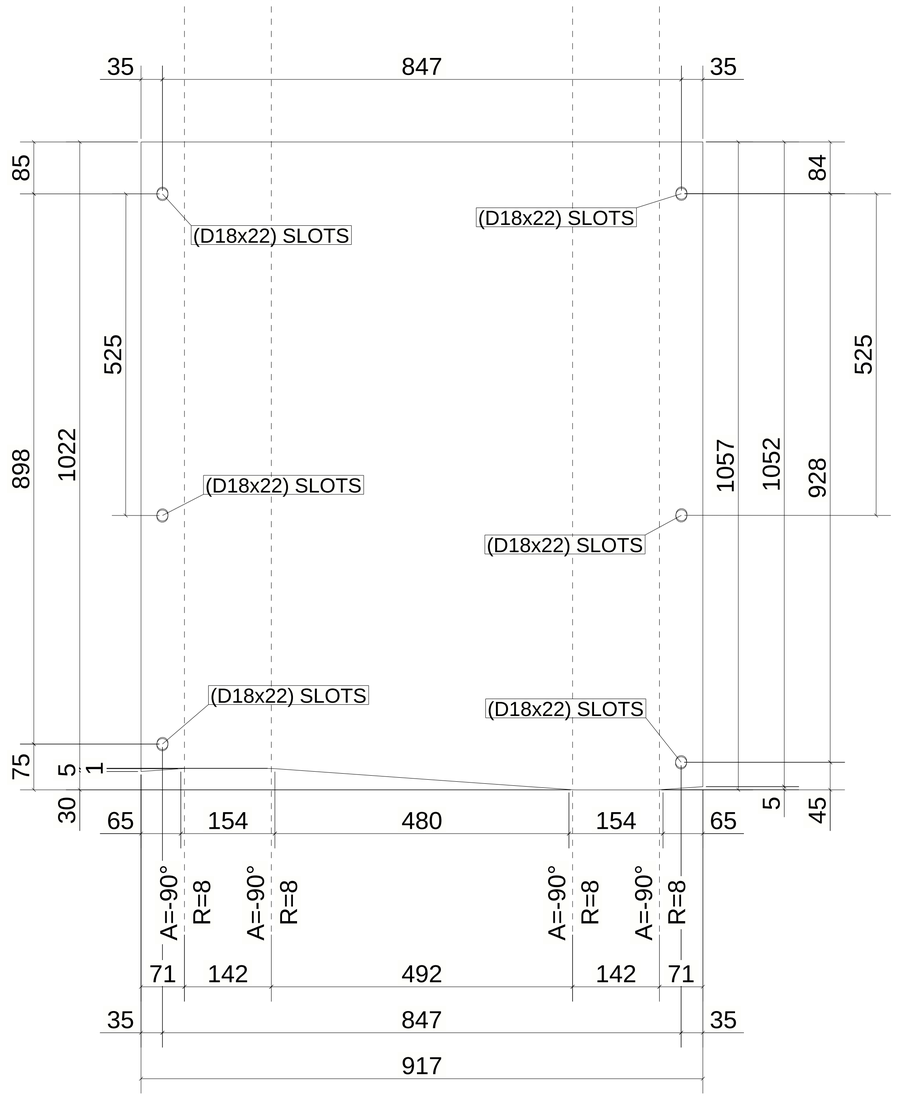

UNFOLDED VIEW

1 *REQUIRED AS DRAWN MARKED* Z16-CHQ039

6 October Monorail
Engineering Unit
Valid For Construction

GENERAL NOTES:

1. THE DIMENSIONS SHOWN ARE NOMINAL (IN MILLIMETERS), U.N.O.
2. WELD SIZESHALL BE AISC MINIMUM OF 6 mm UNLESS NOTED OTHERWISE.
3. ALL FIELD WELDS SHALL BE INSPECTED PER QUALITY ASSURANCE AND SPECIAL INSPECTIONS.

REFERENCE DRAWINGS

1	93M-BOA-NAT-LOT-04833
2	93M-BOA-NAT-LOT-09170
3	93M-BOA-NAT-LOT-01976
4	93M-BOA-NAT-LOT-20021
5	
6	
7	
8	
9	

6TH OF OCTOBER CITY RAIL TRANSIT MONORAIL

The Authority | Consultant | Main Contractor | Structural Designer

KEY PLAN:

SCALE: AS SHOWN | SHOP DRAWING | DATE: 08/29/2023

REV	DATE	DSG.	CHK.	APP.	AMENDMENTS	STATUS
B	08/29/2023	M.KH	M.KH	DR.M.M	ISSUED FOR INFORMATION	IFI
A	09/21/2022	M.KH	M.KH	DR.M.M	ISSUED FOR INFORMATION	IFI

DRAWING TITLE
6TH OF OCTOBER MONORAIL
SERVICE WALKWAYS
ZONE(1016)
Z16-CHQ039

Project Code	Rubric	Initiator	Lot	Ref	Number	Revision
93M047	ACC	60DEP	DWG		16067	B

Tekla structures

Same comments as
93M-0476-ACC-60DEP-DWG-16053-B.

REVIEWED WITH COMMENT
MONORAILS PROJECT

MATERIAL LIST FOR ASSEMBLY MK'D Z16-CHQ009						
Mark	Profile	GRADE	No.	Length	Area	Weight
Z16-CHQ009	CHQD5*1103.4	S235JR	1	3091	6.64	129.03
				Total	6.64	129.03

BOLT LIST:-

BOLT \ STUD	BOLT DESCRIPTION	QTY	FINISH
BOLT	B1N2W16 X 55 A325M	4	

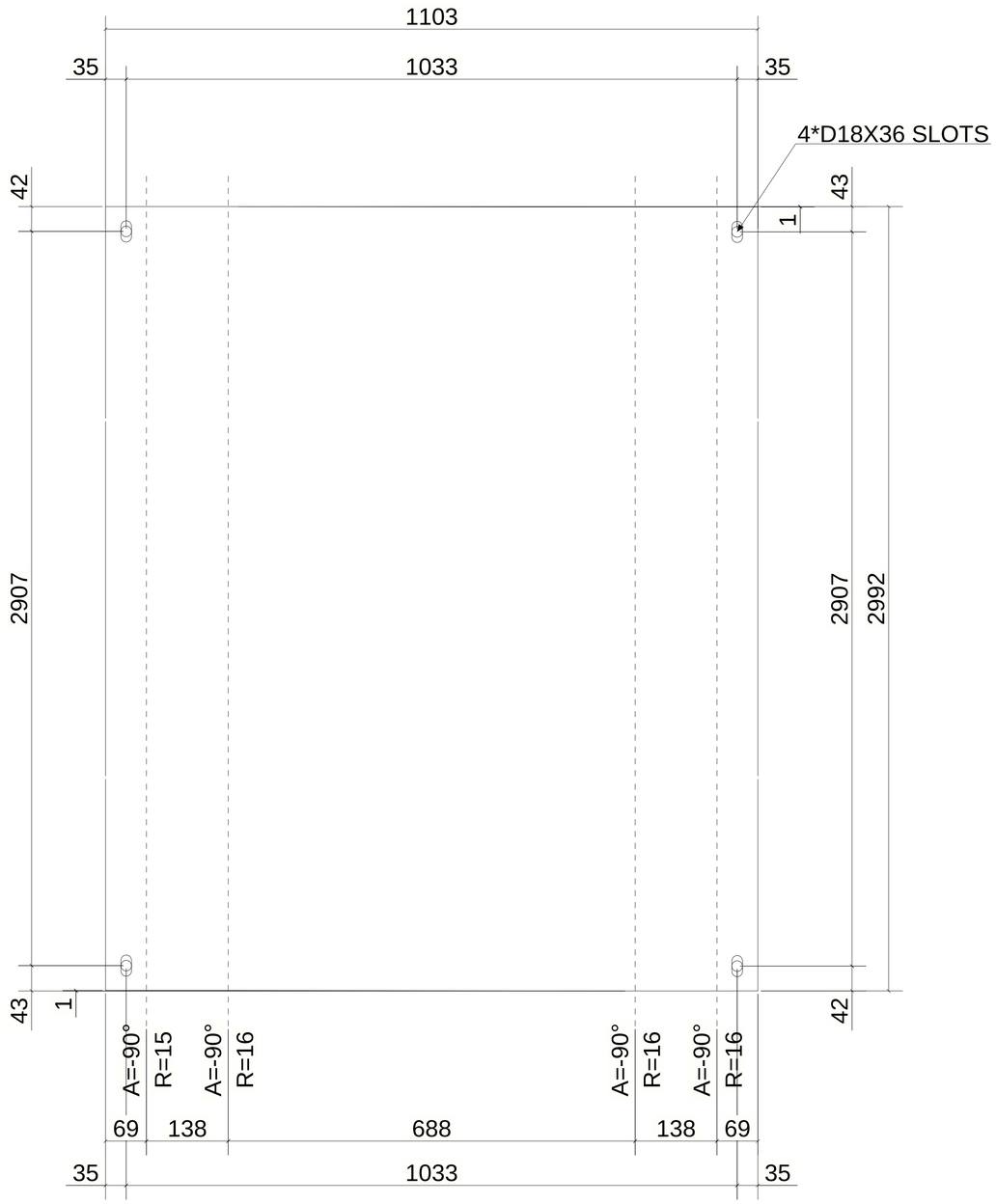

UNFOLDED VIEW

4 *REQUIRED AS DRAWN MARKED* Z16-CHQ009

6 October Monorail
Engineering Unit
Valid For Construction

GENERAL NOTES:

1. THE DIMENSIONS SHOWN ARE NOMINAL (IN MILLIMETERS), U.N.O.
2. WELD SIZESHALL BE AISC MINIMUM OF 6 mm UNLESS NOTED OTHERWISE.
3. ALL FIELD WELDS SHALL BE INSPECTED PER QUALITY ASSURANCE AND SPECIAL INSPECTIONS.

REFERENCE DRAWINGS

1	93M-BOA-NAT-LOT-04833
2	93M-BOA-NAT-LOT-09170
3	93M-BOA-NAT-LOT-01976
4	93M-BOA-NAT-LOT-20021
5	
6	
7	
8	
9	

6TH OF OCTOBER CITY RAIL TRANSIT MONORAIL

The Authority | Hill International Consultant | Main Contractor | Structural Designer

KEY PLAN:

SCALE: AS SHOWN | SHOP DRAWING | DATE: 08/29/2023

REV	DATE	DSG.	CHK.	APP.	AMENDMENTS	STATUS
B	08/29/2023	M.KH	M.KH	DR.M.M	ISSUED FOR INFORMATION	IFI
A	09/21/2022	M.KH	M.KH	DR.M.M	ISSUED FOR INFORMATION	IFI

DRAWING TITLE
6TH OF OCTOBER MONORAIL
SERVICE WALKWAYS
ZONE(1016)
Z16-CHQ009

Project Code	Rubric	Initiator	Lot	Ref	Number	Revision
93M	0476	ACC	60	DEP	DWG16068	B

Tekla structures

Approval is subject to approval of coordination package between multi-discipline.

REVIEWED WITH COMMENT
MONORAILS PROJECT

MATERIAL LIST FOR ASSEMBLY MK'D Z16-CHQ041						
Mark	Profile	GRADE	No.	Length	Area	Weight
Z16-CHQ041	CHQD_PL5*917.1	S235JR	1	1500	2.46	47.79
				Total	2.46	47.79

BOLT LIST:-

BOLT \ STUD	BOLT DESCRIPTION		QTY	FINISH
BOLT	B1N2W16 X 45	A325M	4	
BOLT	B1N2W16 X 50	A325M	2	

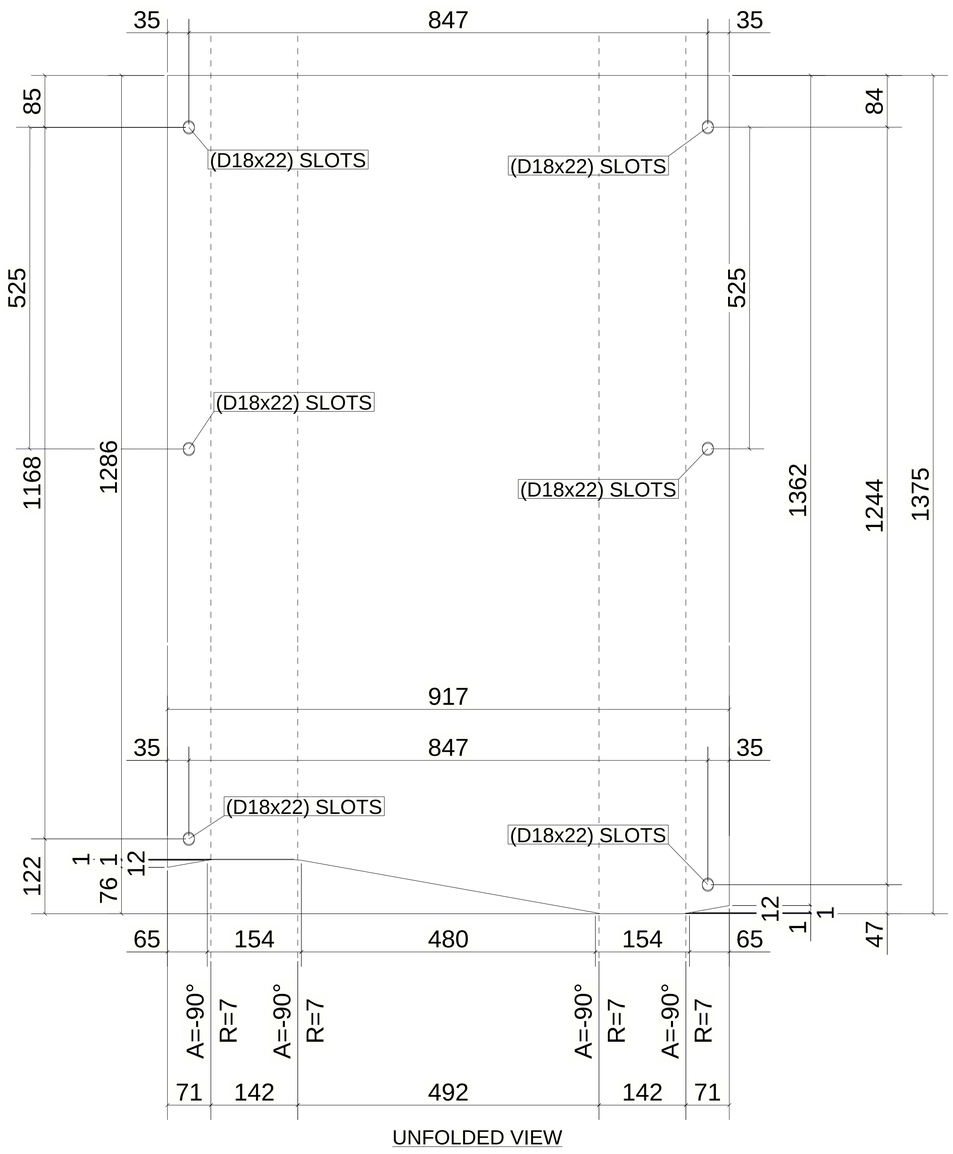

UNFOLDED VIEW

1 *REQUIRED AS DRAWN MARKED* Z16-CHQ041

6 October Monorail
Engineering Unit
Valid For Construction

GENERAL NOTES:

1. THE DIMENSIONS SHOWN ARE NOMINAL (IN MILLIMETERS), U.N.O.
2. WELD SIZESHALL BE AISC MINIMUM OF 6 mm UNLESS NOTED OTHERWISE.
3. ALL FIELD WELDS SHALL BE INSPECTED PER QUALITY ASSURANCE AND SPECIAL INSPECTIONS.

REFERENCE DRAWINGS

1	93M-BOA-NAT-LOT-04833
2	93M-BOA-NAT-LOT-09170
3	93M-BOA-NAT-LOT-01976
4	93M-BOA-NAT-LOT-20021
5	
6	
7	
8	
9	

6TH OF OCTOBER CITY RAIL TRANSIT MONORAIL

The Authority | Consultant: Hill International | Main Contractor: ORASCOM CONSTRUCTION, BOMBARDIER, China State Construction | Structural Designer: INNOVA TRANSPORTATION

KEY PLAN:

SCALE: AS SHOWN | SHOP DRAWING | DATE: 08/29/2023

REV	DATE	DSG.	CHK.	APP.	AMENDMENTS	STATUS
B	08/29/2023	M.KH	M.KH	DR.M.M	ISSUED FOR INFORMATION	IFI
A	09/21/2022	M.KH	M.KH	DR.M.M	ISSUED FOR INFORMATION	IFI

DRAWING TITLE
6TH OF OCTOBER MONORAIL
SERVICE WALKWAYS
ZONE(1016)
Z16-CHQ041

Project Code	Rubric	Initiator	Lot	Ref	Number	Revision
93	M047	6ACC	60DE	PDWG	16069	B

Tekla structures

Same comments as
93M-0476-ACC-60DEP-DWG-16053-B.

REVIEWED WITH COMMENT MONORAILS PROJECT

MATERIAL LIST FOR ASSEMBLY MK'D Z16-CHQ014						
Mark	Profile	GRADE	No.	Length	Area	Weight
Z16-CHQ014	CHQD5*1103.4	S235JR	1	3066	6.59	128.13
				Total	6.59	128.13

BOLT LIST:-

BOLT \ STUD	BOLT DESCRIPTION	QTY	FINISH
BOLT	B1N2W16 X 55 A325M	4	

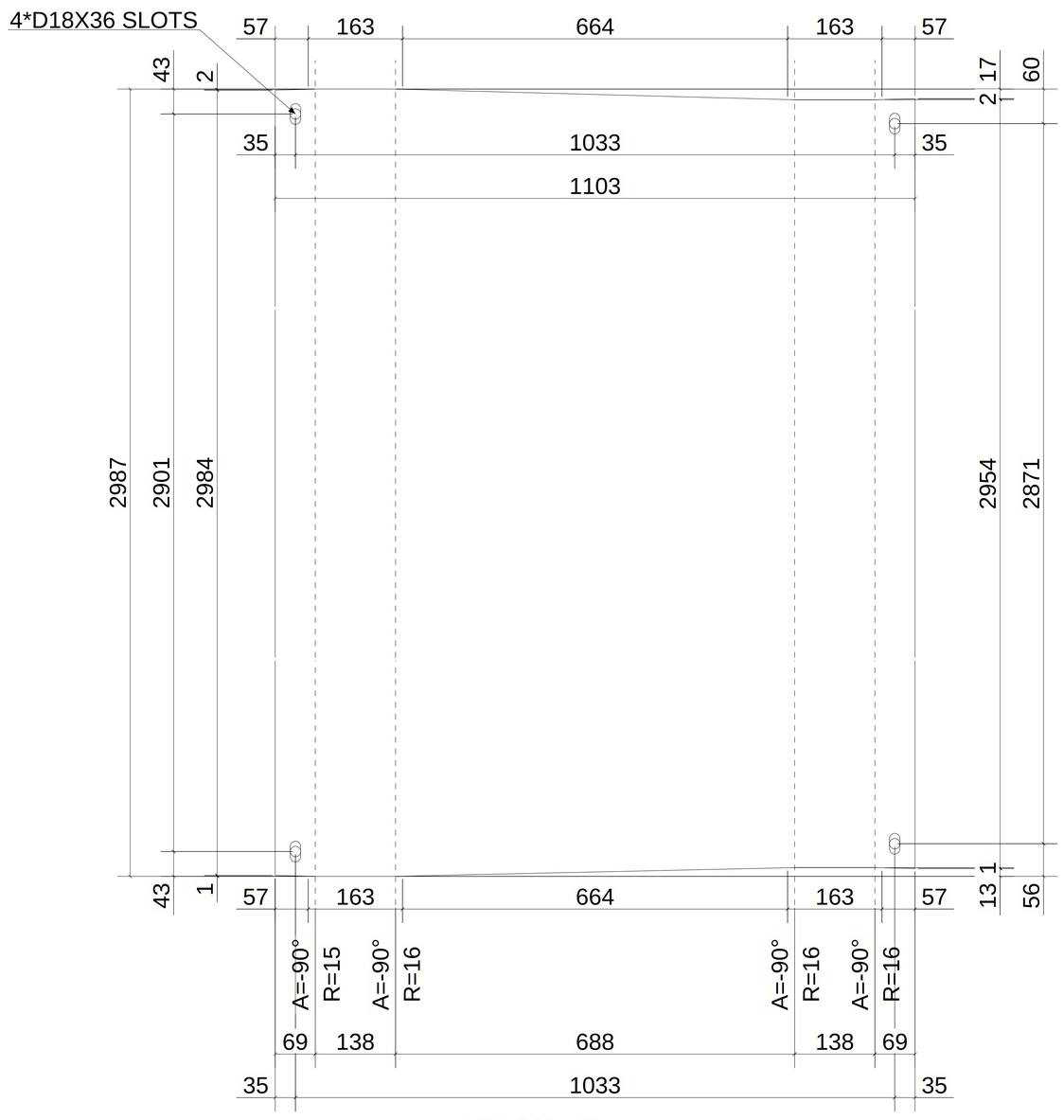

UNFOLDED VIEW

1 *REQUIRED AS DRAWN MARKED* Z16-CHQ014

6 October Monorail Engineering Unit
Valid For Construction

GENERAL NOTES:

1. THE DIMENSIONS SHOWN ARE NOMINAL (IN MILLIMETERS), U.N.O.
2. WELD SIZESHALL BE AISC MINIMUM OF 6 mm UNLESS NOTED OTHERWISE.
3. ALL FIELD WELDS SHALL BE INSPECTED PER QUALITY ASSURANCE AND SPECIAL INSPECTIONS.

REFERENCE DRAWINGS

1	93M-BOA-NAT-LOT-04833
2	93M-BOA-NAT-LOT-09170
3	93M-BOA-NAT-LOT-01976
4	93M-BOA-NAT-LOT-20021
5	
6	
7	
8	
9	

6TH OF OCTOBER CITY RAIL TRANSIT MONORAIL

The Authority — Hill International Consultant — ORASCOM BOMBARDIER Main Contractor — INNOVA Structural Designer

KEY PLAN:

SCALE	SHOPDRAWING	DATE
AS SHOWN		08/29/2023

REV	DATE	DSG.	CHK.	APP.	AMENDMENTS	STATUS
B	08/29/2023	M.KH	M.KH	DR.M.M	ISSUED FOR INFORMATION	IFI
A	09/21/2022	M.KH	M.KH	DR.M.M	ISSUED FOR INFORMATION	IFI

DRAWING TITLE
6TH OF OCTOBER MONORAIL
SERVICE WALKWAYS
ZONE(1016)
Z16-CHQ014

Project Code	Rubric	Initiator	Lot	Ref	Number	Revision
93M	0476	ACC	60DEP	DWG	16070	B

Tekla structures

Same comments as
93M-0476-ACC-60DEP-DWG-16053-B.

REVIEWED WITH COMMENT
MONORAILS PROJECT

MATERIAL LIST FOR ASSEMBLY MK'D Z16-CHQ004

Mark	Profile	GRADE	No.	Length	Area	Weight
Z16-CHQ004	CHQD5*1103.4	S235JR	1	3072	6.59	128.12
				Total	6.59	128.12

BOLT LIST:-

BOLT \ STUD	BOLT DESCRIPTION	QTY	FINISH
BOLT	B1N2W16 X 55 A325M	4	

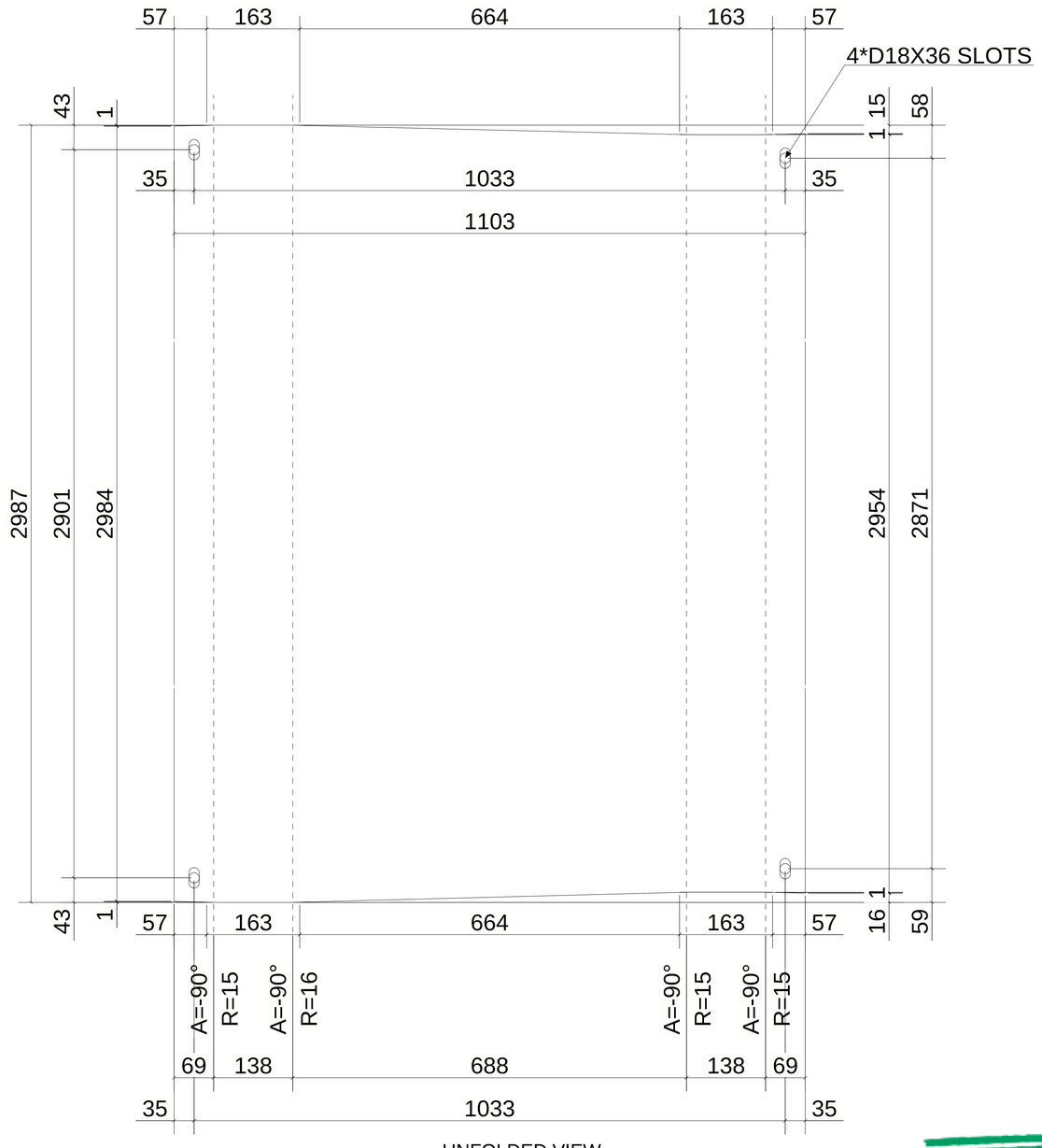

UNFOLDED VIEW

1 *REQUIRED AS DRAWN MARKED* Z16-CHQ004

6 October: Monorail
Engineering Unit
Valid For Construction

GENERAL NOTES:

1. THE DIMENSIONS SHOWN ARE NOMINAL (IN MILLIMETERS), U.N.O.
2. WELD SIZESHALL BE AISC MINIMUM OF 6 mm UNLESS NOTED OTHERWISE.
3. ALL FIELD WELDS SHALL BE INSPECTED PER QUALITY ASSURANCE AND SPECIAL INSPECTIONS.

REFERENCE DRAWINGS

1	93M-BOA-NAT-LOT-04833
2	93M-BOA-NAT-LOT-09170
3	93M-BOA-NAT-LOT-01976
4	93M-BOA-NAT-LOT-20021
5	
6	
7	
8	
9	

6TH OF OCTOBER CITY RAIL TRANSIT MONORAIL

The Authority — Hill International (Consultant) — Main Contractor — Structural Designer

KEY PLAN:

SCALE: AS SHOWN | SHOP DRAWING | DATE: 08/29/2023

REV	DATE	DSG.	CHK.	APP.	AMENDMENTS	STATUS
B	08/29/2023	M.KH	M.KH	DR.M.M	ISSUED FOR INFORMATION	IFI
A	09/21/2022	M.KH	M.KH	DR.M.M	ISSUED FOR INFORMATION	IFI

DRAWING TITLE
6TH OF OCTOBER MONORAIL
SERVICE WALKWAYS
ZONE(1016)
Z16-CHQ004

Project Code	Rubric	Initiator	Lot	Ref	Number	Revision
93	M047	6ACC	60DE	PDWG	1607	1 B

Tekla structures

Approval is subject to approval of coordination package between multi-discipline.

REVIEWED WITH COMMENT
MONORAILS PROJECT

MATERIAL LIST FOR ASSEMBLY MK'D Z16-CHQ040						
Mark	Profile	GRADE	No.	Length	Area	Weight
Z16-CHQ040	CHQD_PL5*917.1	S235JR	1	1500	1.99	38.62
				Total	1.99	38.62

BOLT LIST:-

BOLT \ STUD	BOLT DESCRIPTION		QTY	FINISH
BOLT	B1N2W16 X 45	A325M	4	
BOLT	B1N2W16 X 50	A325M	2	

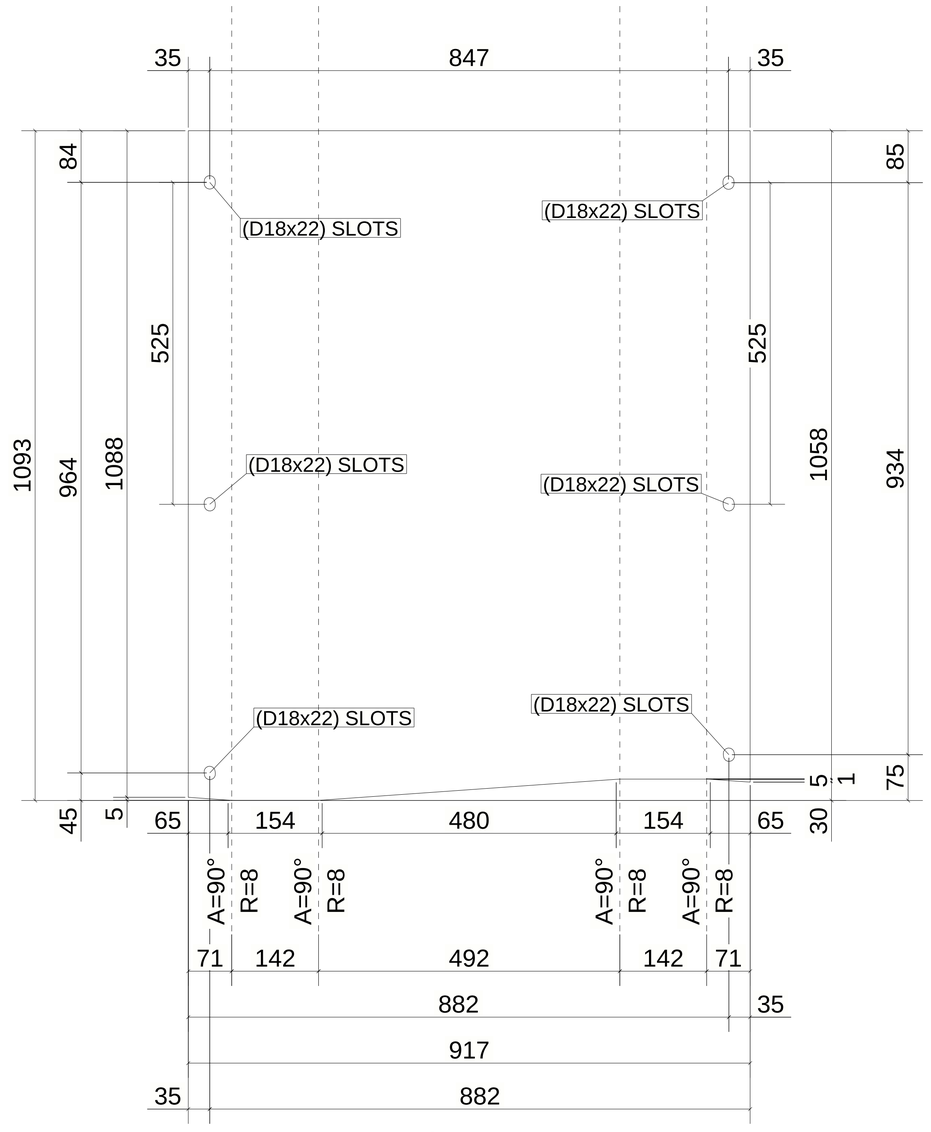

UNFOLDED VIEW

1 *REQUIRED AS DRAWN MARKED* Z16-CHQ040

6 October Monorail
Engineering Unit
Valid For Construction

GENERAL NOTES:

1. THE DIMENSIONS SHOWN ARE NOMINAL (IN MILLIMETERS), U.N.O.
2. WELD SIZESHALL BE AISC MINIMUM OF 6 mm UNLESS NOTED OTHERWISE.
3. ALL FIELD WELDS SHALL BE INSPECTED PER QUALITY ASSURANCE AND SPECIAL INSPECTIONS.

REFERENCE DRAWINGS

1	93M-BOA-NAT-LOT-04833
2	93M-BOA-NAT-LOT-09170
3	93M-BOA-NAT-LOT-01976
4	93M-BOA-NAT-LOT-20021
5	
6	
7	
8	
9	

6TH OF OCTOBER CITY RAIL TRANSIT MONORAIL

The Authority | Consultant | Main Contractor | Structural Designer

KEY PLAN:

SCALE: AS SHOWN | SHOP DRAWING | DATE: 08/29/2023

REV	DATE	DSG.	CHK.	APP.	AMENDMENTS	STATUS
B	08/29/2023	M.KH	M.KH	DR.M.M	ISSUED FOR INFORMATION	IFI
A	09/21/2022	M.KH	M.KH	DR.M.M	ISSUED FOR INFORMATION	IFI

DRAWING TITLE
6TH OF OCTOBER MONORAIL
SERVICE WALKWAYS
ZONE(1016)
Z16-CHQ040

Project Code	Rubric	Initiator	Lot	Ref	Number	Revision
9 3 M 0 4 7 6	A C C 6 0	D E P	D W G	1 6 0 7 2		B

Tekla structures

Same comments as
93M-0476-ACC-60DEP-DWG-16053-B.

REVIEWED WITH COMMENT MONORAILS PROJECT

MATERIAL LIST FOR ASSEMBLY MK'D Z16-CHQ028						
Mark	Profile	GRADE	No.	Length	Area	Weight
Z16-CHQ028	CHQD5*1103.4	S235JR	1	3088	6.63	128.91
				Total	6.63	128.91

BOLT LIST:-

BOLT \ STUD	BOLT DESCRIPTION		QTY	FINISH
BOLT	B1N2W16 X 55	A325M	4	

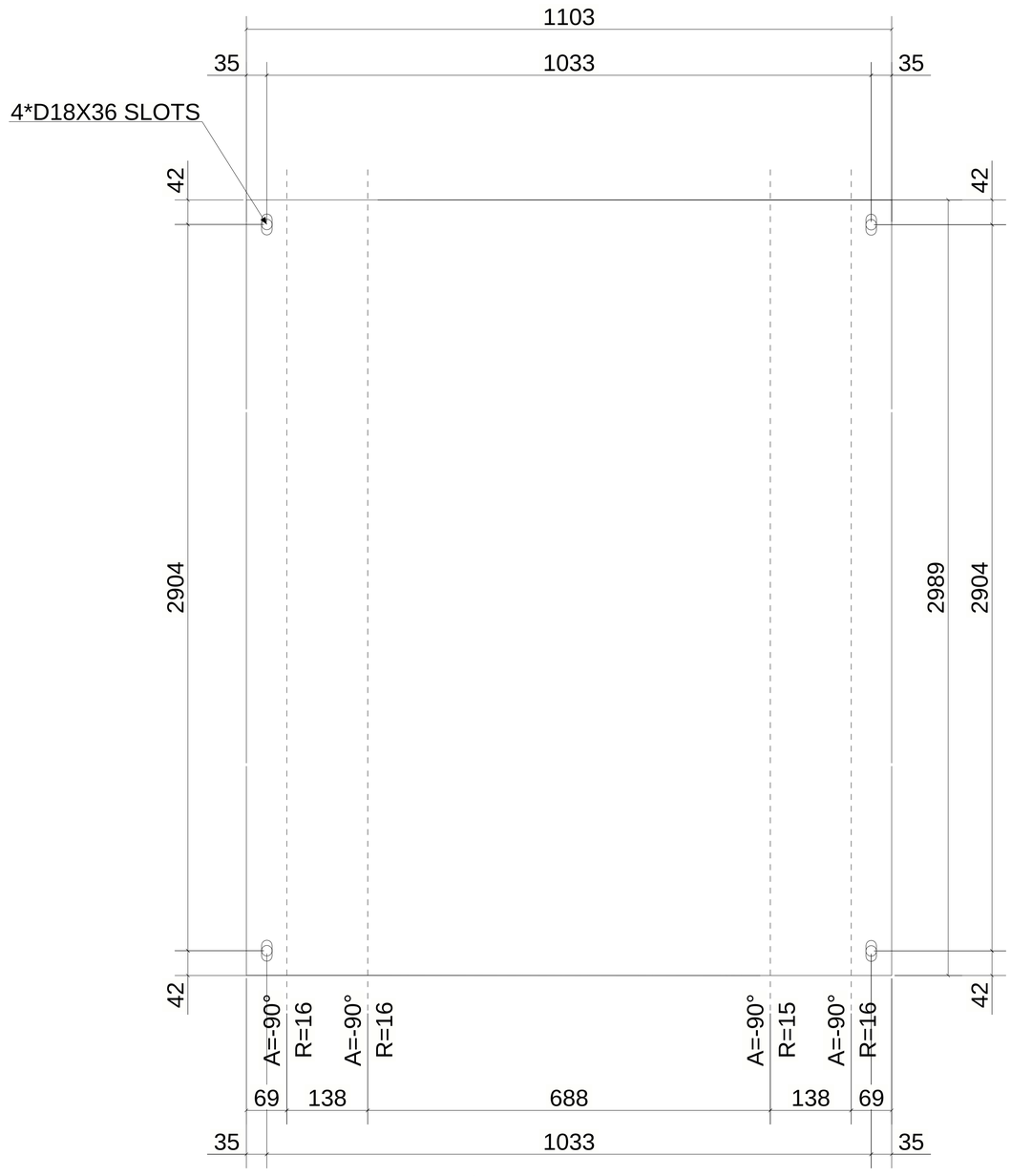

UNFOLDED VIEW

1 *REQUIRED AS DRAWN MARKED* Z16-CHQ028

6 October Monorail Engineering Unit
Valid For Construction

GENERAL NOTES:

1. THE DIMENSIONS SHOWN ARE NOMINAL (IN MILLIMETERS), U.N.O.
2. WELD SIZESHALL BE AISC MINIMUM OF 6 mm UNLESS NOTED OTHERWISE.
3. ALL FIELD WELDS SHALL BE INSPECTED PER QUALITY ASSURANCE AND SPECIAL INSPECTIONS.

REFERENCE DRAWINGS

1	93M-BOA-NAT-LOT-04833
2	93M-BOA-NAT-LOT-09170
3	93M-BOA-NAT-LOT-01976
4	93M-BOA-NAT-LOT-20021
5	
6	
7	
8	
9	

6TH OF OCTOBER CITY RAIL TRANSIT MONORAIL

The Authority | Hill International Consultant | ORASCOM BOMBARDIER Main Contractor | INNOVA TRANSPORTATION Structural Designer

KEY PLAN:

SCALE: AS SHOWN | SHOPDRAWING | DATE: 08/29/2023

REV	DATE	DSG.	CHK.	APP.	AMENDMENTS	STATUS
B	08/29/2023	M.KH	M.KH	DR.M.M	ISSUED FOR INFORMATION	IFI
A	09/21/2022	M.KH	M.KH	DR.M.M	ISSUED FOR INFORMATION	IFI

DRAWING TITLE
6TH OF OCTOBER MONORAIL SERVICE WALKWAYS ZONE(1016)
Z16-CHQ028

Project Code	Rubric	Initiator	Lot	Ref	Number	Revision
93M	0476	ACC	60DEP	DWG	16073	B

Tekla structures

Same comments as
93M-0476-ACC-60DEP-DWG-16053-B.

REVIEWED WITH
COMMENT
MONORAILS PROJECT

MATERIAL LIST FOR ASSEMBLY MK'D Z16-CHQ034						
Mark	Profile	GRADE	No.	Length	Area	Weight
Z16-CHQ034	CHQD5*1103.4	S235JR	1	2316	4.92	95.64
				Total	4.92	95.64

BOLT LIST:-

BOLT \ STUD	BOLT DESCRIPTION	QTY	FINISH
BOLT	B1N2W16 X 55 A325M	4	

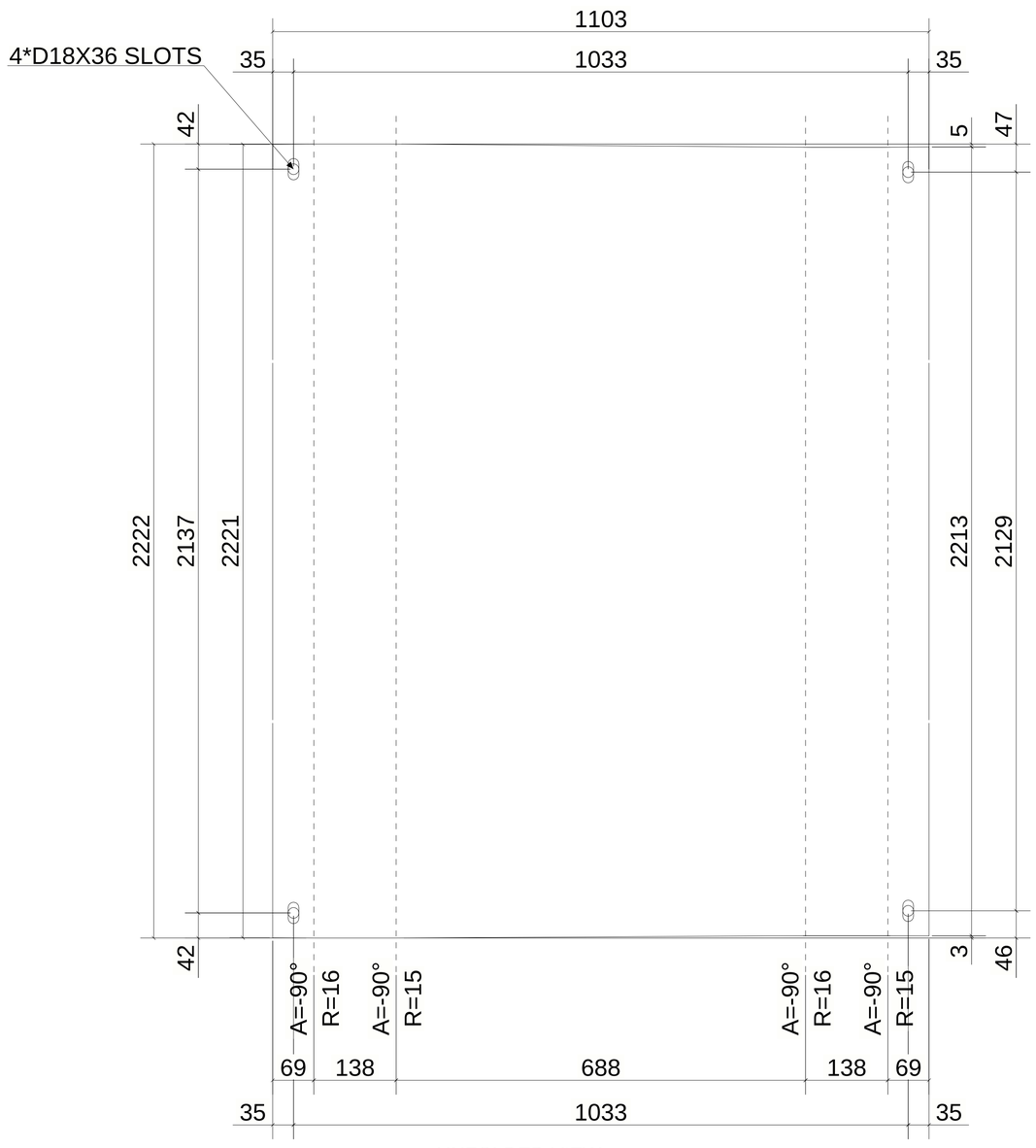

UNFOLDED VIEW

6 October Monorail
Engineering Unit
Valid For Construction

1 *REQUIRED AS DRAWN MARKED* Z16-CHQ034

GENERAL NOTES:

1. THE DIMENSIONS SHOWN ARE NOMINAL (IN MILLIMETERS), U.N.O.
2. WELD SIZESHALL BE AISC MINIMUM OF 6 mm UNLESS NOTED OTHERWISE.
3. ALL FIELD WELDS SHALL BE INSPECTED PER QUALITY ASSURANCE AND SPECIAL INSPECTIONS.

REFERENCE DRAWINGS

1	93M-BOA-NAT-LOT-04833
2	93M-BOA-NAT-LOT-09170
3	93M-BOA-NAT-LOT-01976
4	93M-BOA-NAT-LOT-20021
5	
6	
7	
8	
9	

6TH OF OCTOBER CITY RAIL TRANSIT MONORAIL

The Authority — Hill International Consultant — Main Contractor — Structural Designer

KEY PLAN:

SCALE	SHOP DRAWING	DATE
AS SHOWN		08/29/2023

REV	DATE	DSG.	CHK.	APP.	AMENDMENTS	STATUS
B	08/29/2023	M.KH	M.KH	DR.M.M	ISSUED FOR INFORMATION	IFI
A	09/21/2022	M.KH	M.KH	DR.M.M	ISSUED FOR INFORMATION	IFI

DRAWING TITLE
6TH OF OCTOBER MONORAIL
SERVICE WALKWAYS
ZONE(1016)
Z16-CHQ034

Project Code	Rubric	Initiator	Lot	Ref	Number	Revision
93M	047	ACC	60	DEP	DWG 16074	B

Trekla structures

Same comments as
93M-0476-ACC-60DEP-DWG-16053-B.

REVIEWED WITH COMMENT
MONORAILS PROJECT

MATERIAL LIST FOR ASSEMBLY MK'D Z16-CHQ030

Mark	Profile	GRADE	No.	Length	Area	Weight
Z16-CHQ030	CHQD5*1103.4	S235JR	1	2361	5.02	97.53
				Total	5.02	97.53

BOLT LIST:-

BOLT \ STUD	BOLT DESCRIPTION	QTY	FINISH
BOLT	B1N2W16 X 55 A325M	4	

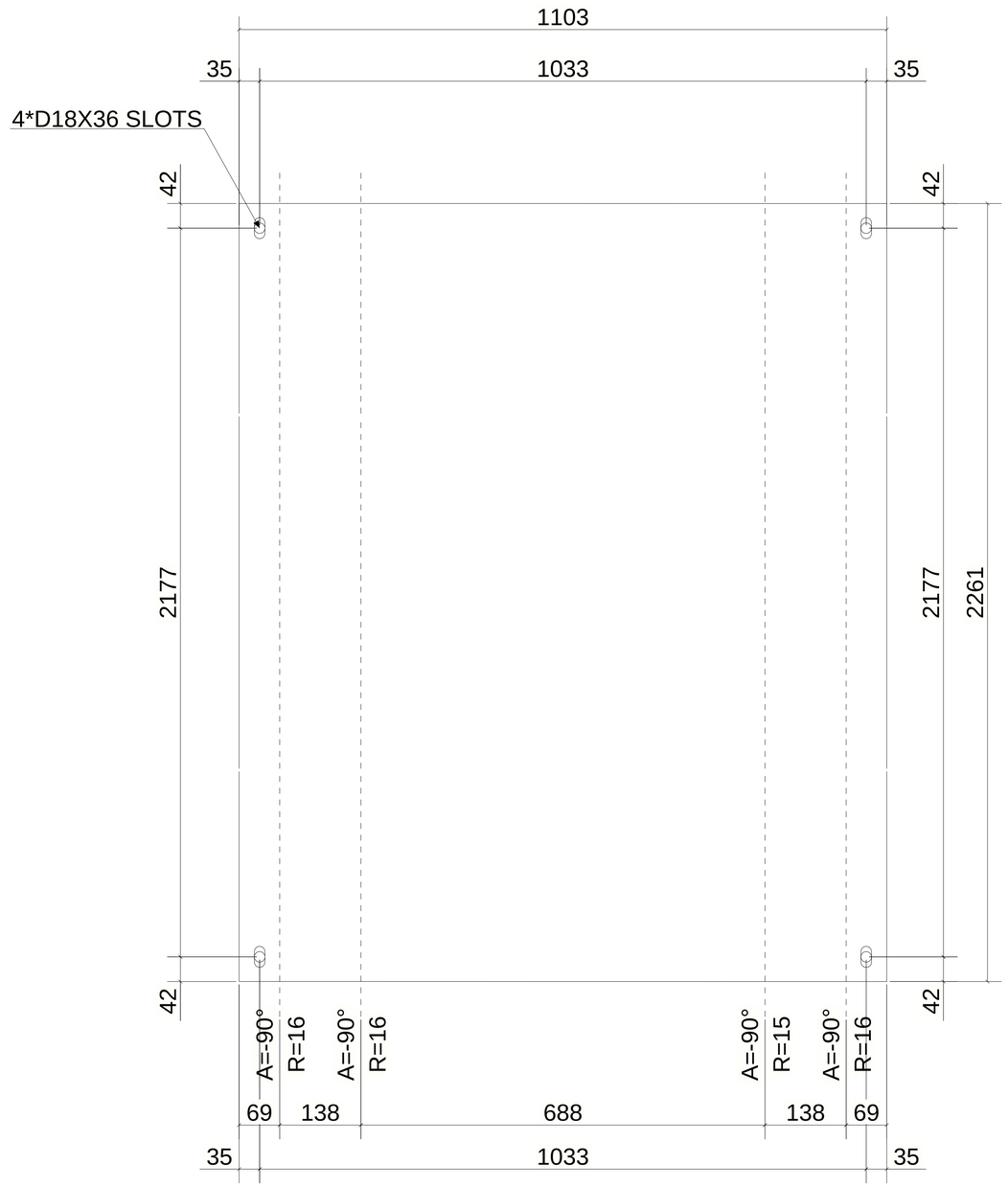

UNFOLDED VIEW

1 *REQUIRED AS DRAWN MARKED* Z16-CHQ030

6 October Monorail
Engineering Unit
Valid For Construction

GENERAL NOTES:

1. THE DIMENSIONS SHOWN ARE NOMINAL (IN MILLIMETERS), U.N.O.
2. WELD SIZESHALL BE AISC MINIMUM OF 6 mm UNLESS NOTED OTHERWISE.
3. ALL FIELD WELDS SHALL BE INSPECTED PER QUALITY ASSURANCE AND SPECIAL INSPECTIONS.

REFERENCE DRAWINGS

1	93M-BOA-NAT-LOT-04833
2	93M-BOA-NAT-LOT-09170
3	93M-BOA-NAT-LOT-01976
4	93M-BOA-NAT-LOT-20021
5	
6	
7	
8	
9	

6TH OF OCTOBER CITY RAIL TRANSIT MONORAIL

The Authority | Consultant | Main Contractor | Structural Designer

KEY PLAN:

SCALE	SHOP DRAWING	DATE
AS SHOWN		08/29/2023

REV	DATE	DSG.	CHK.	APP.	AMENDMENTS	STATUS
B	09/29/2023	M.KH	M.KH	DR.M.M	ISSUED FOR INFORMATION	IFI
A	09/21/2022	M.KH	M.KH	DR.M.M	ISSUED FOR INFORMATION	IFI

DRAWING TITLE
6TH OF OCTOBER MONORAIL
SERVICE WALKWAYS
ZONE(1016)
Z16-CHQ030

Project Code	Rubric	Initiator	Lot	Ref	Number	Revision
93	M047	6ACC	60DE	PDWG	1607	5 B

Tekla structures

Same comments as
93M-0476-ACC-60DEP-DWG-16053-B.

REVIEWED WITH COMMENT MONORAILS PROJECT

MATERIAL LIST FOR ASSEMBLY MK'D Z16-CHQ024

Mark	Profile	GRADE	No.	Length	Area	Weight
Z16-CHQ024	CHQD5*1103.4	S235JR	1	3069	6.59	128.22
				Total	6.59	128.22

BOLT LIST:-

BOLT \ STUD	BOLT DESCRIPTION		QTY	FINISH
BOLT	B1N2W16 X 55	A325M	4	

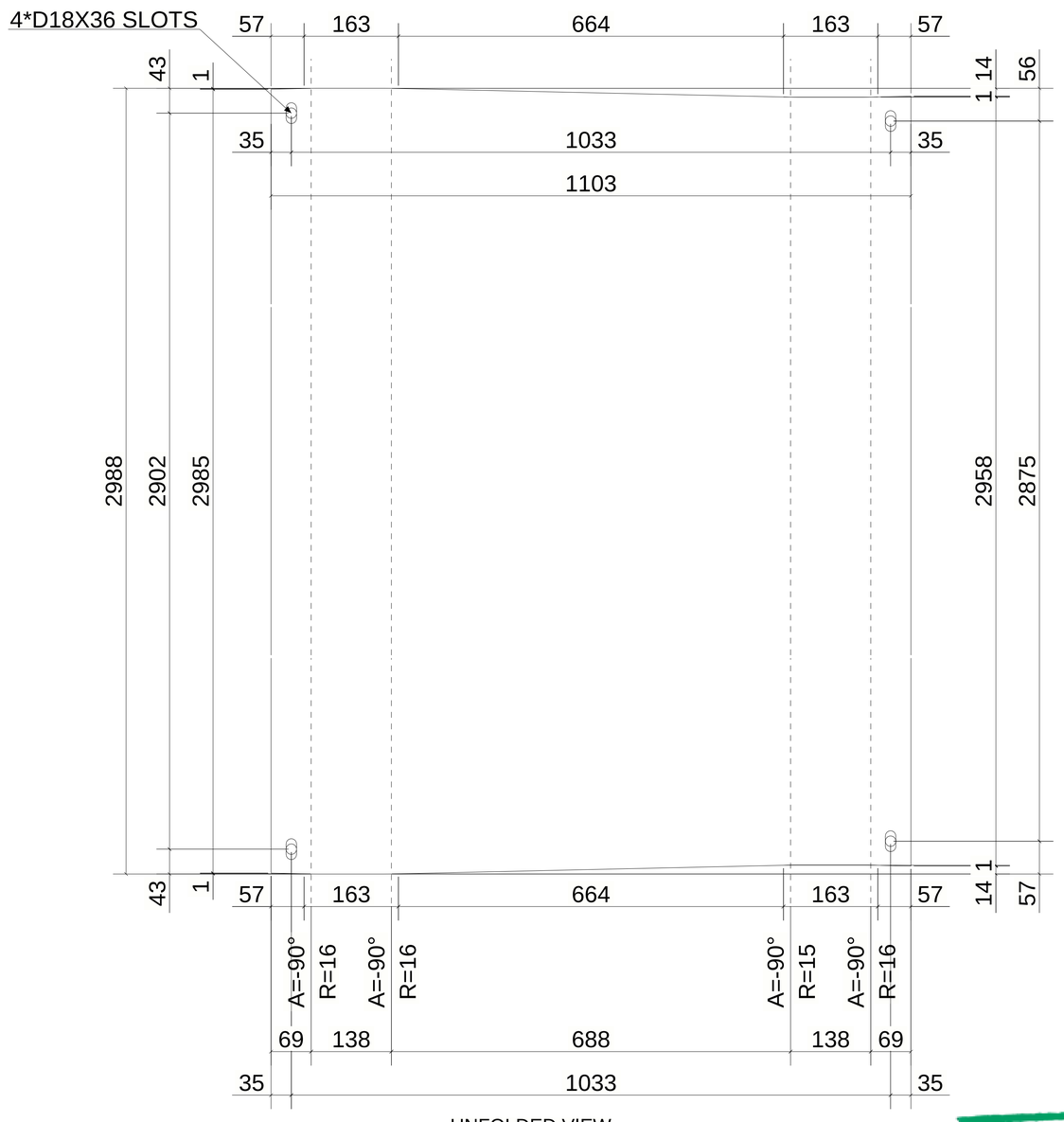

UNFOLDED VIEW

3 *REQUIRED AS DRAWN MARKED* Z16-CHQ024

6 October Monorail Engineering Unit
Valid For Construction

GENERAL NOTES:

1. THE DIMENSIONS SHOWN ARE NOMINAL (IN MILLIMETERS), U.N.O.
2. WELD SIZESHALL BE AISC MINIMUM OF 6 mm UNLESS NOTED OTHERWISE.
3. ALL FIELD WELDS SHALL BE INSPECTED PER QUALITY ASSURANCE AND SPECIAL INSPECTIONS.

REFERENCE DRAWINGS

1	93M-BOA-NAT-LOT-04833
2	93M-BOA-NAT-LOT-09170
3	93M-BOA-NAT-LOT-01976
4	93M-BOA-NAT-LOT-20021
5	
6	
7	
8	
9	

6TH OF OCTOBER CITY RAIL TRANSIT MONORAIL

The Authority — Hill International Consultant — Main Contractor — Structural Designer

KEY PLAN:

SCALE: AS SHOWN — SHOPDRAWING — DATE: 08/29/2023

REV	DATE	DSG.	CHK.	APP.	AMENDMENTS	STATUS
B	08/29/2023	M.KH	M.KH	DR.M.M	ISSUED FOR INFORMATION	IFI
A	09/21/2022	M.KH	M.KH	DR.M.M	ISSUED FOR INFORMATION	IFI

DRAWING TITLE
6TH OF OCTOBER MONORAIL SERVICE WALKWAYS ZONE(1016)
Z16-CHQ024

Project Code	Rubric	Initiator	Lot	Ref	Number	Revision
93M	0476	ACC	60DEP	DWG	16076	B

Tekla structures

Same comments as
93M-0476-ACC-60DEP-DWG-16053-B.

REVIEWED WITH COMMENT
MONORAILS PROJECT

MATERIAL LIST FOR ASSEMBLY MK'D Z16-CHQ008

Mark	Profile	GRADE	No.	Length	Area	Weight
Z16-CHQ008	CHQD5*1103.4	S235JR	1	2190	4.64	90.14
				Total	4.64	90.14

BOLT LIST:-

BOLT \ STUD	BOLT DESCRIPTION	QTY	FINISH
BOLT	B1N2W16 X 55 A325M	4	

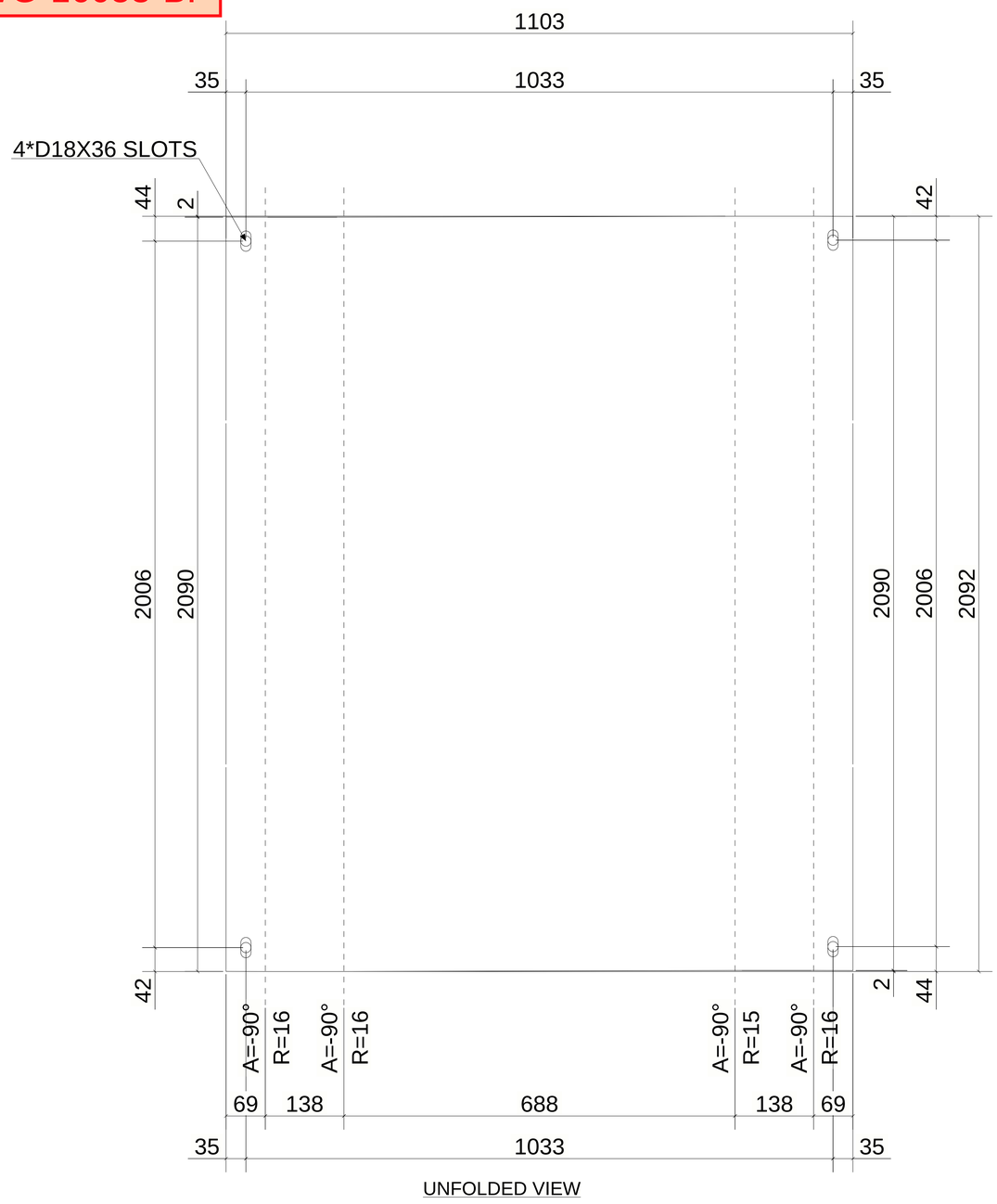

UNFOLDED VIEW

1 *REQUIRED AS DRAWN MARKED* Z16-CHQ008

6 October: Monorail
Engineering Unit
Valid For Construction

GENERAL NOTES:

1. THE DIMENSIONS SHOWN ARE NOMINAL (IN MILLIMETERS), U.N.O.
2. WELD SIZESHALL BE AISC MINIMUM OF 6 mm UNLESS NOTED OTHERWISE.
3. ALL FIELD WELDS SHALL BE INSPECTED PER QUALITY ASSURANCE AND SPECIAL INSPECTIONS.

REFERENCE DRAWINGS

1	93M-BOA-NAT-LOT-04833
2	93M-BOA-NAT-LOT-09170
3	93M-BOA-NAT-LOT-01976
4	93M-BOA-NAT-LOT-20021
5	
6	
7	
8	
9	

6TH OF OCTOBER CITY RAIL TRANSIT MONORAIL

The Authority — Consultant: Hill International — Main Contractor: ORASCOM / BOMBARDIER — Structural Designer: INNOVA

KEY PLAN:

SCALE: AS SHOWN | SHOP DRAWING | DATE: 08/29/2023

REV	DATE	DSG.	CHK.	APP.	AMENDMENTS	STATUS
B	08/29/2023	M.KH	M.KH	DR.M.M	ISSUED FOR INFORMATION	IFI
A	09/21/2022	M.KH	M.KH	DR.M.M	ISSUED FOR INFORMATION	IFI

DRAWING TITLE
6TH OF OCTOBER MONORAIL
SERVICE WALKWAYS
ZONE(1016)
Z16-CHQ008

Project Code	Rubric	Initiator	Lot	Ref	Number	Revision
93M	047	6ACC	60DEP	DWG	16077	B

Tekla structures

Same comments as
93M-0476-ACC-60DEP-DWG-16053-B.

REVIEWED WITH COMMENT MONORAILS PROJECT

MATERIAL LIST FOR ASSEMBLY MK'D Z16-CHQ029						
Mark	Profile	GRADE	No.	Length	Area	Weight
Z16-CHQ029	CHQD5*1103.4	S235JR	1	3089	6.63	128.92
				Total	6.63	128.92

BOLT LIST:-

BOLT \ STUD	BOLT DESCRIPTION		QTY	FINISH
BOLT	B1N2W16 X 55	A325M	4	

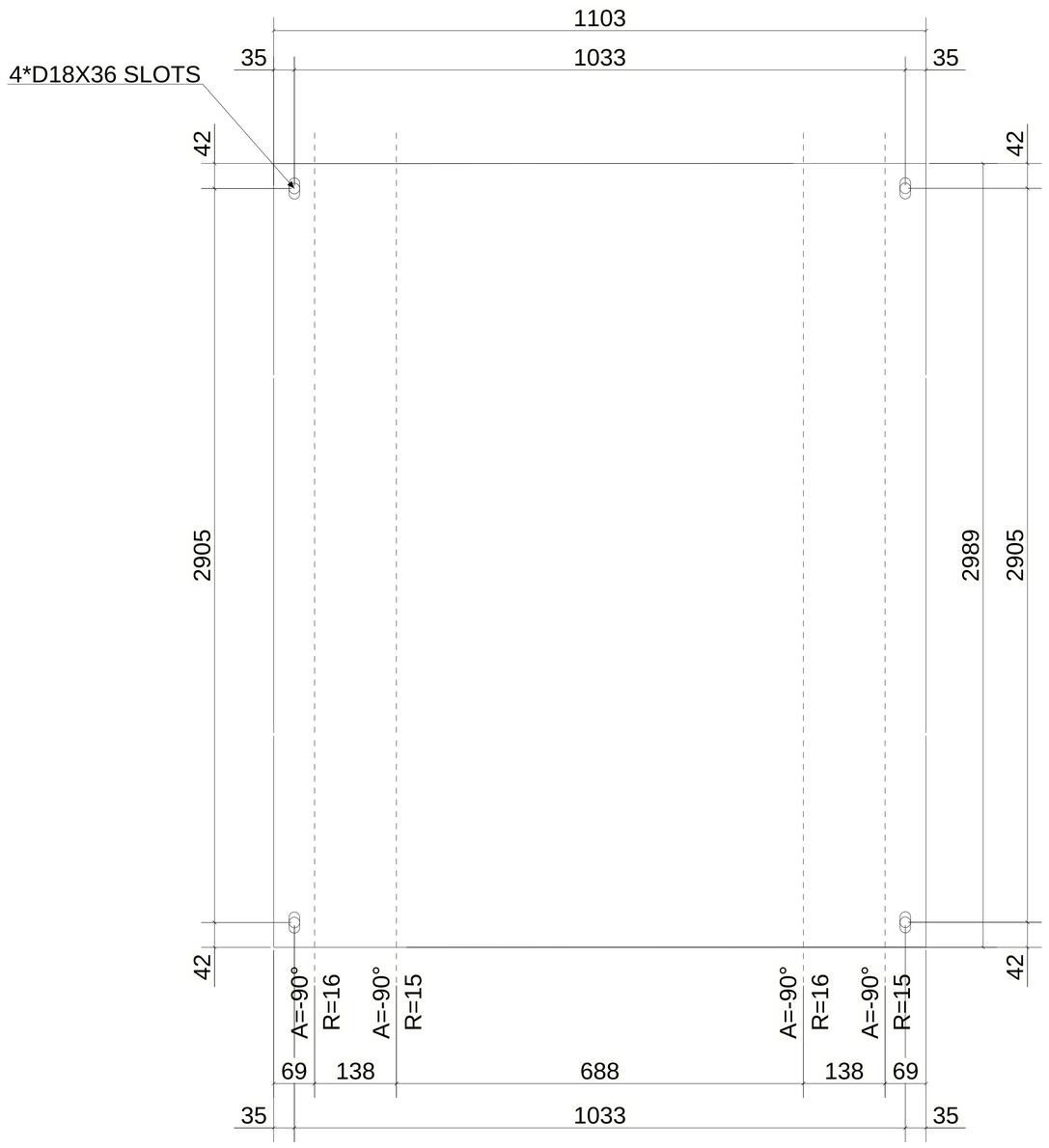

UNFOLDED VIEW

6 October Monorail Engineering Unit
Valid For Construction

1 *REQUIRED AS DRAWN MARKED* Z16-CHQ029

GENERAL NOTES:

1. THE DIMENSIONS SHOWN ARE NOMINAL (IN MILLIMETERS), U.N.O.
2. WELD SIZESHALL BE AISC MINIMUM OF 6 mm UNLESS NOTED OTHERWISE.
3. ALL FIELD WELDS SHALL BE INSPECTED PER QUALITY ASSURANCE AND SPECIAL INSPECTIONS.

REFERENCE DRAWINGS

1	93M-BOA-NAT-LOT-04833
2	93M-BOA-NAT-LOT-09170
3	93M-BOA-NAT-LOT-01976
4	93M-BOA-NAT-LOT-20021
5	
6	
7	
8	
9	

6TH OF OCTOBER CITY RAIL TRANSIT MONORAIL

The Authority | Hill International Consultant | ORASCOM BOMBARDIER Main Contractor | INNOVA TRANSPORTATION Structural Designer

KEY PLAN:

SCALE	SHOPDRAWING	DATE
AS SHOWN		08/29/2023

REV	DATE	DSG.	CHK.	APP.	AMENDMENTS	STATUS
B	08/29/2023	M.KH	M.KH	DR.M.M	ISSUED FOR INFORMATION	IFI
A	09/21/2022	M.KH	M.KH	DR.M.M	ISSUED FOR INFORMATION	IFI

DRAWING TITLE
6TH OF OCTOBER MONORAIL SERVICE WALKWAYS ZONE(1016)
Z16-CHQ029

Project Code	Rubric	Initiator	Lot	Ref	Number	Revision
93M	0476	ACC	60DEP	DWG	16078	B

Tekla structures

Same comments as
93M-0476-ACC-60DEP-DWG-16053-B.

REVIEWED WITH COMMENT
MONORAILS PROJECT

MATERIAL LIST FOR ASSEMBLY MK'D Z16-CHQ021						
Mark	Profile	GRADE	No.	Length	Area	Weight
Z16-CHQ021	CHQD5*1103.4	S235JR	1	2093	4.42	85.97
				Total	4.42	85.97

BOLT LIST:-

BOLT \ STUD	BOLT DESCRIPTION	QTY	FINISH
BOLT	B1N2W16 X 55 A325M	4	

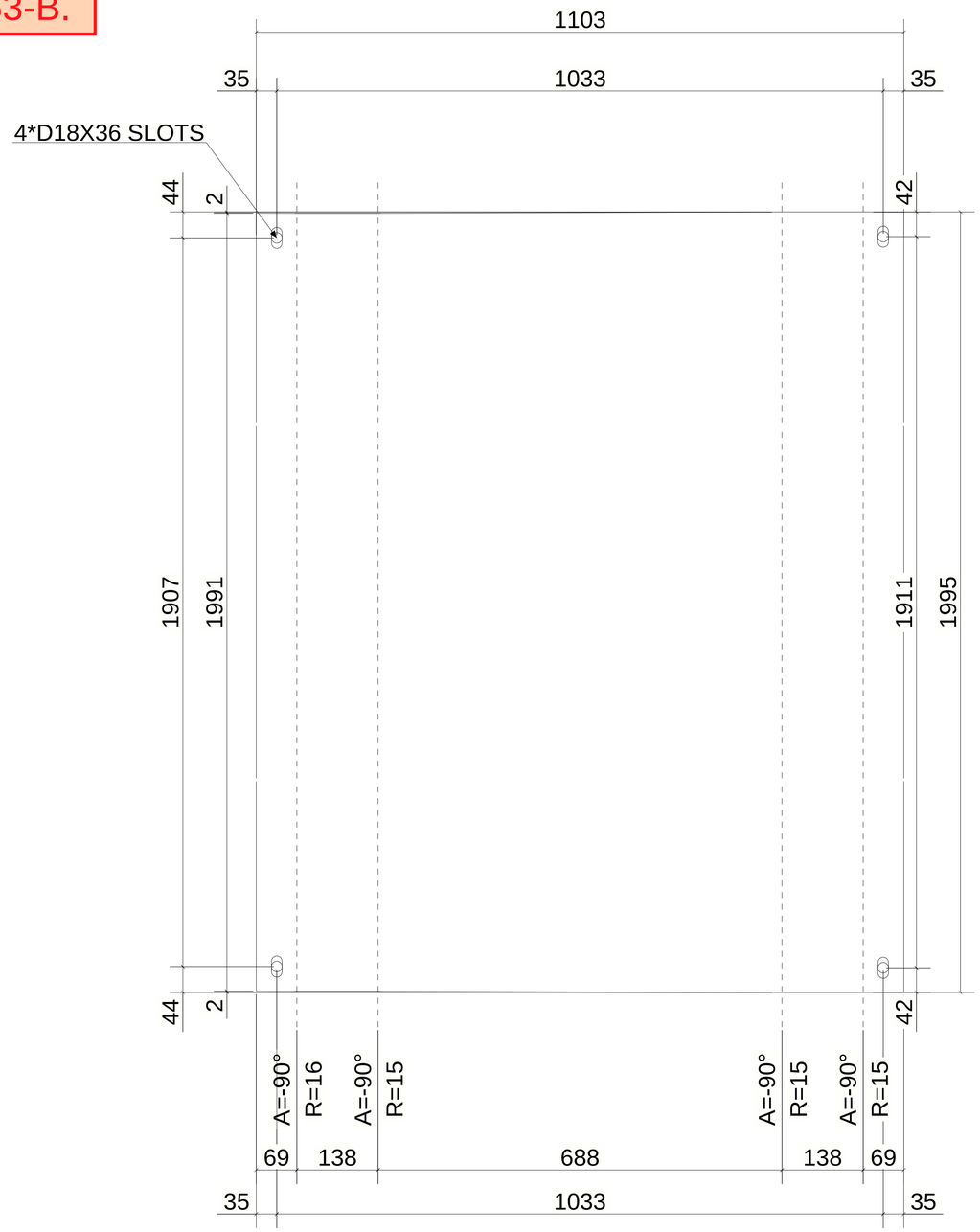

UNFOLDED VIEW

1 *REQUIRED AS DRAWN MARKED* Z16-CHQ021

6 October Monorail
Engineering Unit
Valid For Construction

GENERAL NOTES:

1. THE DIMENSIONS SHOWN ARE NOMINAL (IN MILLIMETERS), U.N.O.
2. WELD SIZESHALL BE AISC MINIMUM OF 6 mm UNLESS NOTED OTHERWISE.
3. ALL FIELD WELDS SHALL BE INSPECTED PER QUALITY ASSURANCE AND SPECIAL INSPECTIONS.

REFERENCE DRAWINGS

1	93M-BOA-NAT-LOT-04833
2	93M-BOA-NAT-LOT-09170
3	93M-BOA-NAT-LOT-01976
4	93M-BOA-NAT-LOT-20021
5	
6	
7	
8	
9	

6TH OF OCTOBER CITY RAIL TRANSIT MONORAIL

The Authority | Consultant: Hill International | Main Contractor | Structural Designer

KEY PLAN:

SCALE: AS SHOWN | SHOP DRAWING | DATE: 08/29/2023

REV	DATE	DSG.	CHK.	APP.	AMENDMENTS	STATUS
B	08/29/2023	M.KH	M.KH	DR.M.M	ISSUED FOR INFORMATION	IFI
A	09/21/2022	M.KH	M.KH	DR.M.M	ISSUED FOR INFORMATION	IFI

DRAWING TITLE
6TH OF OCTOBER MONORAIL
SERVICE WALKWAYS
ZONE(1016)
Z16-CHQ021

Project Code	Rubric	Initiator	Lot	Ref	Number	Revision
93	M047	6ACC	60DE	PDWG	16079	B

Tekla structures

Same comments as
93M-0476-ACC-60DEP-DWG-16053-B.

REVIEWED WITH COMMENT
MONORAILS PROJECT

MATERIAL LIST FOR ASSEMBLY MK'D Z16-CHQ026

Mark	Profile	GRADE	No.	Length	Area	Weight
Z16-CHQ026	CHQD5*1103.4	S235JR	1	3090	6.63	129.02
				Total	6.63	129.02

BOLT LIST:-

BOLT \ STUD	BOLT DESCRIPTION	QTY	FINISH
BOLT	B1N2W16 X 55 A325M	4	

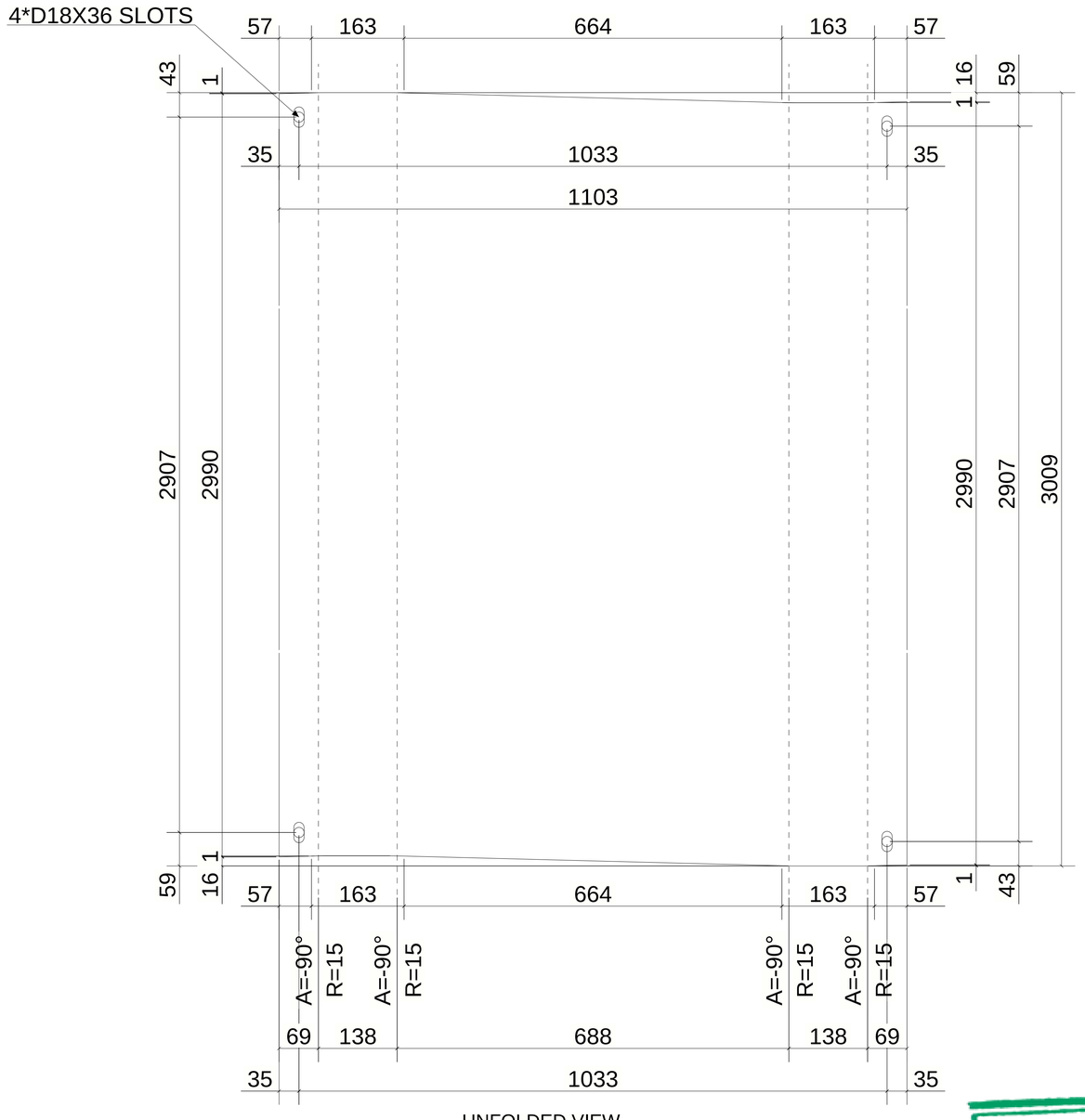

UNFOLDED VIEW

1 *REQUIRED AS DRAWN MARKED* Z16-CHQ026

6 October Monorail
Engineering Unit
Valid For Construction

GENERAL NOTES:

1. THE DIMENSIONS SHOWN ARE NOMINAL (IN MILLIMETERS), U.N.O.
2. WELD SIZESHALL BE AISC MINIMUM OF 6 mm UNLESS NOTED OTHERWISE.
3. ALL FIELD WELDS SHALL BE INSPECTED PER QUALITY ASSURANCE AND SPECIAL INSPECTIONS.

REFERENCE DRAWINGS

1	93M-BOA-NAT-LOT-04833
2	93M-BOA-NAT-LOT-09170
3	93M-BOA-NAT-LOT-01976
4	93M-BOA-NAT-LOT-20021
5	
6	
7	
8	
9	

6TH OF OCTOBER CITY RAIL TRANSIT MONORAIL

The Authority | Consultant: Hill International | Main Contractor: ORASCOM CONSTRUCTION, BOMBARDIER | Structural Designer: INNOVA TRANSPORTATION

KEY PLAN:

SCALE: AS SHOWN | SHOP DRAWING | DATE: 08/29/2023

REV	DATE	DSG.	CHK.	APP.	AMENDMENTS	STATUS
B	08/29/2023	M.KH	M.KH	DR.M.M	ISSUED FOR INFORMATION	IFI
A	09/21/2022	M.KH	M.KH	DR.M.M	ISSUED FOR INFORMATION	IFI

DRAWING TITLE
6TH OF OCTOBER MONORAIL
SERVICE WALKWAYS
ZONE(1016)
Z16-CHQ026

Project Code	Rubric	Initiator	Lot	Ref	Number	Revision
93	M047	6ACC	60DE	PDWG	1608	0 B

Tekla structures

Same comments as
93M-0476-ACC-60DEP-DWG-16053-B.

REVIEWED WITH COMMENT
MONORAILS PROJECT

MATERIAL LIST FOR ASSEMBLY MK'D Z16-CHQ002

Mark	Profile	GRADE	No.	Length	Area	Weight
Z16-CHQ002	CHQD5*1103.4	S235JR	1	2090	4.42	85.84
				Total	4.42	85.84

BOLT LIST:-

BOLT \ STUD	BOLT DESCRIPTION	QTY	FINISH
BOLT	B1N2W16 X 55 A325M	4	

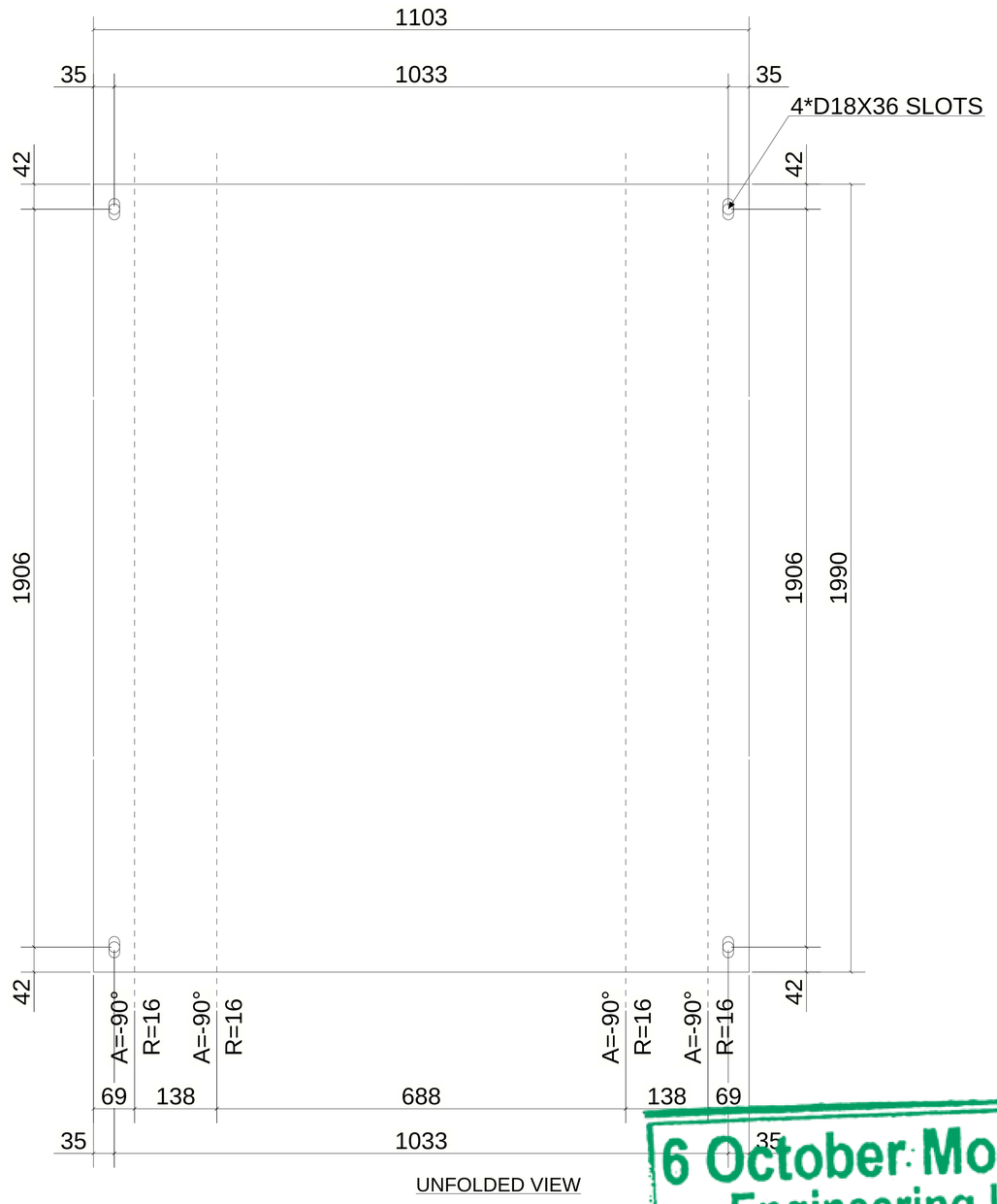

UNFOLDED VIEW

1 *REQUIRED AS DRAWN MARKED* Z16-CHQ002

6 October Monorail
Engineering Unit
Valid For Construction

GENERAL NOTES:

1. THE DIMENSIONS SHOWN ARE NOMINAL (IN MILLIMETERS), U.N.O.
2. WELD SIZESHALL BE AISC MINIMUM OF 6 mm UNLESS NOTED OTHERWISE.
3. ALL FIELD WELDS SHALL BE INSPECTED PER QUALITY ASSURANCE AND SPECIAL INSPECTIONS.

REFERENCE DRAWINGS

1	93M-BOA-NAT-LOT-04833
2	93M-BOA-NAT-LOT-09170
3	93M-BOA-NAT-LOT-01976
4	93M-BOA-NAT-LOT-20021
5	
6	
7	
8	
9	

6TH OF OCTOBER CITY RAIL TRANSIT MONORAIL

The Authority | Consultant: Hill International | Main Contractor: ORASCOM CONSTRUCTION, BOMBARDIER | Structural Designer: INNOVA TRANSPORTATION

KEY PLAN:

SCALE: AS SHOWN | SHOP DRAWING | DATE: 08/29/2023

REV	DATE	DSG.	CHK.	APP.	AMENDMENTS	STATUS
B	09/29/2023	M.KH	M.KH	DR.M.M	ISSUED FOR INFORMATION	IFI
A	09/21/2022	M.KH	M.KH	DR.M.M	ISSUED FOR INFORMATION	IFI

DRAWING TITLE
6TH OF OCTOBER MONORAIL
SERVICE WALKWAYS
ZONE(1016)
Z16-CHQ002

Project Code	Rubric	Initiator	Lot	Ref	Number	Revision
93M	047	6ACC	60DEP	DWG	16081	B

Tekla structures

Approval is subject to approval of coordination package between multi-discipline.

REVIEWED WITH COMMENT
MONORAILS PROJECT

MATERIAL LIST FOR ASSEMBLY MK'D Z16-CHQ042						
Mark	Profile	GRADE	No.	Length	Area	Weight
Z16-CHQ042	CHQD_PL5*917.1	S235JR	1	1500	2.63	51.01
				Total	2.63	51.01

BOLT LIST:-

BOLT \ STUD	BOLT DESCRIPTION		QTY	FINISH
BOLT	B1N2W16 X 45	A325M	4	
BOLT	B1N2W16 X 50	A325M	2	

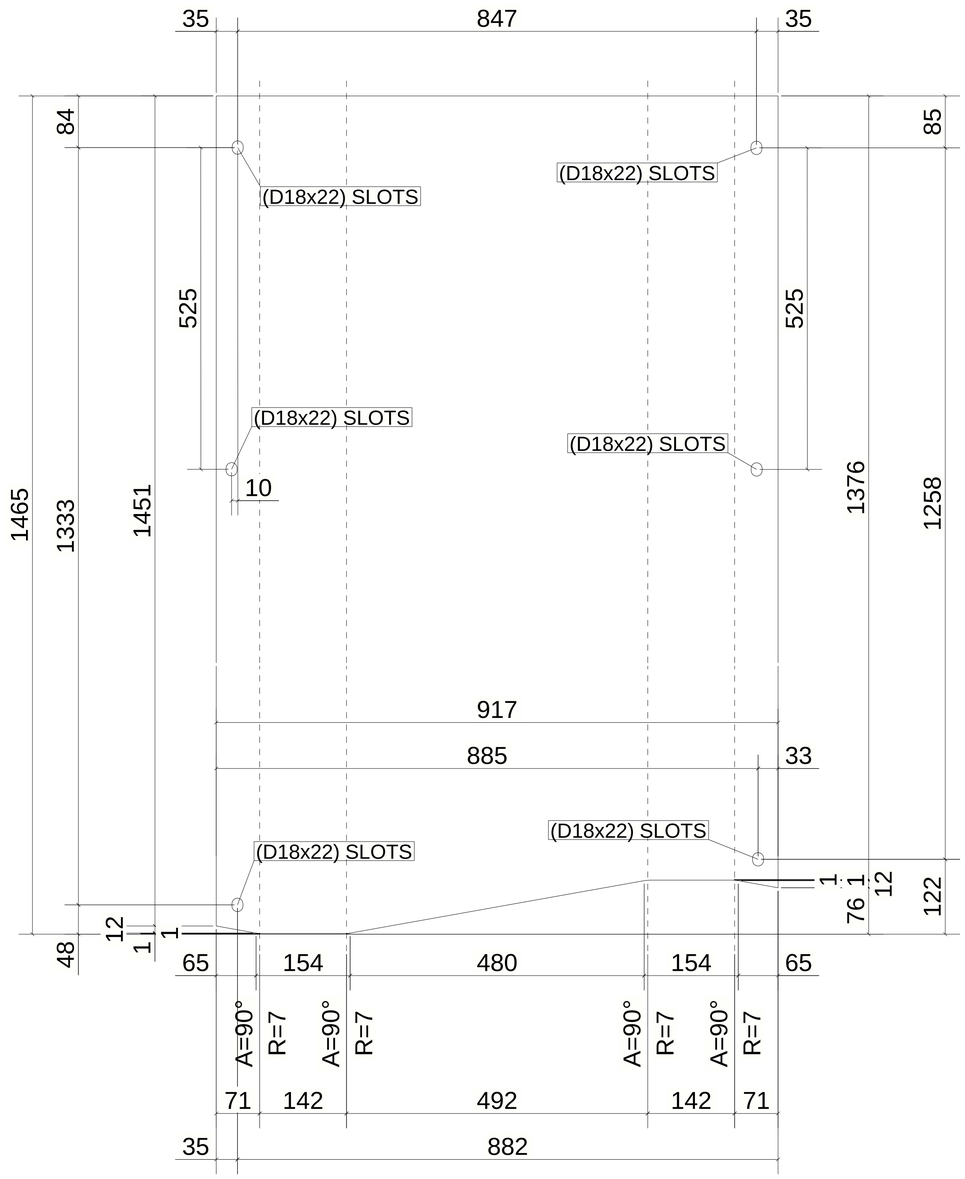

UNFOLDED VIEW

1 *REQUIRED AS DRAWN MARKED* Z16-CHQ042

6 October Monorail
Engineering Unit
Valid For Construction

GENERAL NOTES:

1. THE DIMENSIONS SHOWN ARE NOMINAL (IN MILLIMETERS), U.N.O.
2. WELD SIZESHALL BE AISC MINIMUM OF 6 mm UNLESS NOTED OTHERWISE.
3. ALL FIELD WELDS SHALL BE INSPECTED PER QUALITY ASSURANCE AND SPECIAL INSPECTIONS.

REFERENCE DRAWINGS

1	93M-BOA-NAT-LOT-04833
2	93M-BOA-NAT-LOT-09170
3	93M-BOA-NAT-LOT-01976
4	93M-BOA-NAT-LOT-20021
5	
6	
7	
8	
9	

6TH OF OCTOBER CITY RAIL TRANSIT MONORAIL

The Authority | Consultant | Main Contractor | Structural Designer

KEY PLAN:

SCALE: AS SHOWN | SHOP DRAWING | DATE: 08/29/2023

REV	DATE	DSG.	CHK.	APP.	AMENDMENTS	STATUS
B	09/29/2023	M.KH	M.KH	DR.M.M	ISSUED FOR INFORMATION	IFI
A	09/21/2022	M.KH	M.KH	DR.M.M	ISSUED FOR INFORMATION	IFI

DRAWING TITLE
6TH OF OCTOBER MONORAIL
SERVICE WALKWAYS
ZONE(1016)
Z16-CHQ042

Project Code	Rubric	Initiator	Lot	Ref	Number	Revision
93M	047	6ACC	60DE	PDWG	1608	B

Tekla structures

Same comments as
93M-0476-ACC-60DEP-DWG-16053-B.

REVIEWED WITH COMMENT
MONORAILS PROJECT

MATERIAL LIST FOR ASSEMBLY MK'D Z16-CHQ012						
Mark	Profile	GRADE	No.	Length	Area	Weight
Z16-CHQ012	CHQD5*1103.4	S235JR	1	3088	6.63	128.90
				Total	6.63	128.90

BOLT LIST:-

BOLT \ STUD	BOLT DESCRIPTION	QTY	FINISH
BOLT	B1N2W16 X 55 A325M	4	

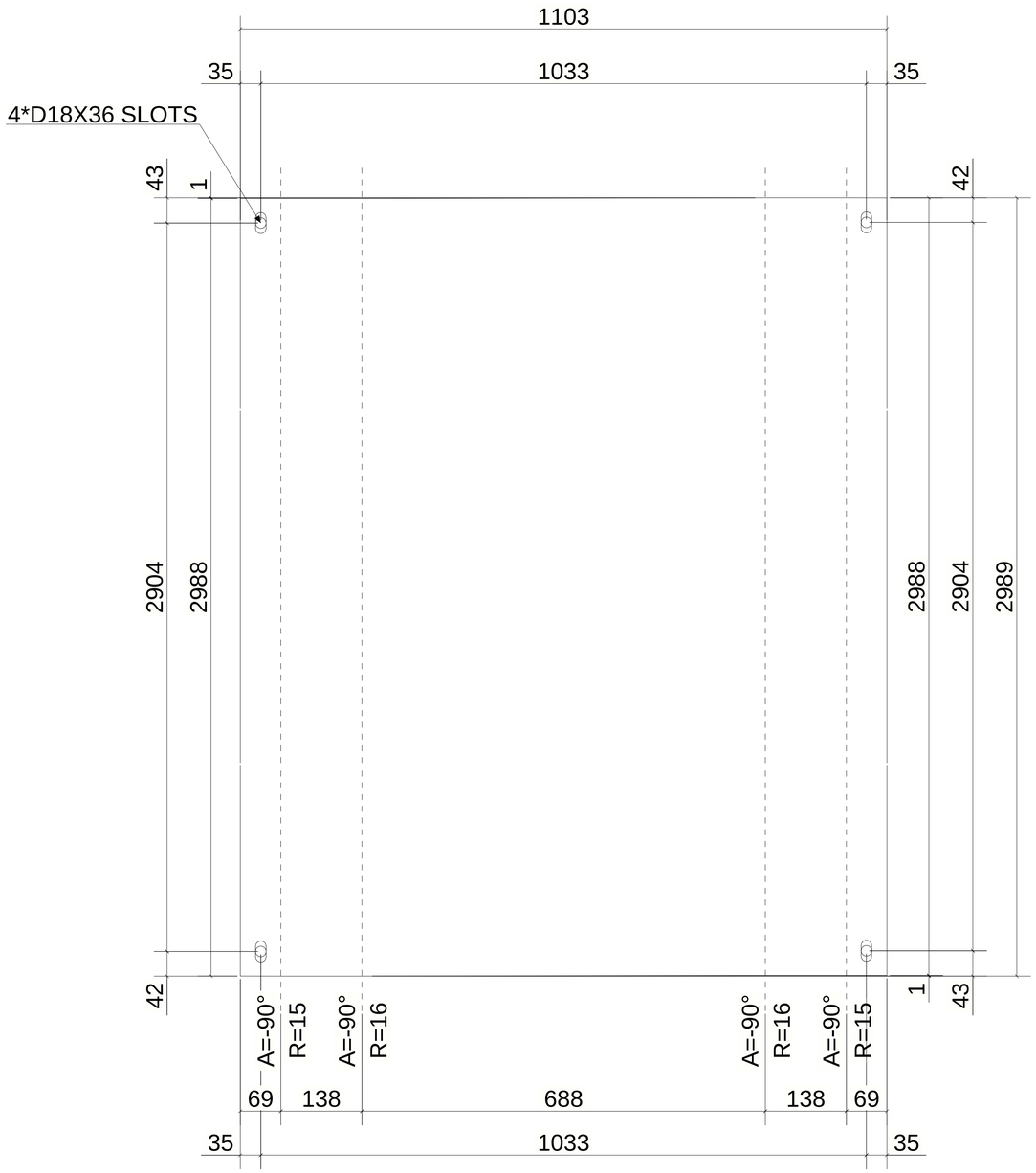

UNFOLDED VIEW

2 *REQUIRED AS DRAWN MARKED* Z16-CHQ012

6 October Monorail
Engineering Unit
Valid For Construction

GENERAL NOTES:

1. THE DIMENSIONS SHOWN ARE NOMINAL (IN MILLIMETERS), U.N.O.
2. WELD SIZESHALL BE AISC MINIMUM OF 6 mm UNLESS NOTED OTHERWISE.
3. ALL FIELD WELDS SHALL BE INSPECTED PER QUALITY ASSURANCE AND SPECIAL INSPECTIONS.

REFERENCE DRAWINGS

1	93M-BOA-NAT-LOT-04833
2	93M-BOA-NAT-LOT-09170
3	93M-BOA-NAT-LOT-01976
4	93M-BOA-NAT-LOT-20021
5	
6	
7	
8	
9	

6TH OF OCTOBER CITY RAIL TRANSIT MONORAIL

The Authority — Consultant: Hill International — Main Contractor: ORASCOM CONSTRUCTION / BOMBARDIER — Structural Designer: INNOVA

KEY PLAN:

SCALE: AS SHOWN | SHOP DRAWING | DATE: 08/29/2023

REV.	DATE	DSG.	CHK.	APP.	AMENDMENTS	STATUS
B	08/29/2023	M.KH	M.KH	DR.M.M	ISSUED FOR INFORMATION	IFI
A	09/21/2022	M.KH	M.KH	DR.M.M	ISSUED FOR INFORMATION	IFI

DRAWING TITLE
6TH OF OCTOBER MONORAIL
SERVICE WALKWAYS
ZONE(1016)
Z16-CHQ012

Project Code	Rubric	Initiator	Lot	Ref	Number	Revision
93	M047	6ACC	60DE	PDWG	16083	B

Tekla structures

Same comments as
93M-0476-ACC-60DEP-DWG-16053-B.

REVIEWED WITH COMMENT
MONORAILS PROJECT

MATERIAL LIST FOR ASSEMBLY MK'D Z16-CHQ007

Mark	Profile	GRADE	No.	Length	Area	Weight
Z16-CHQ007	CHQD5*1103.4	S235JR	1	3094	6.64	129.14
				Total	6.64	129.14

BOLT LIST:-

BOLT \ STUD	BOLT DESCRIPTION	QTY	FINISH
BOLT	B1N2W16 X 55 A325M	4	

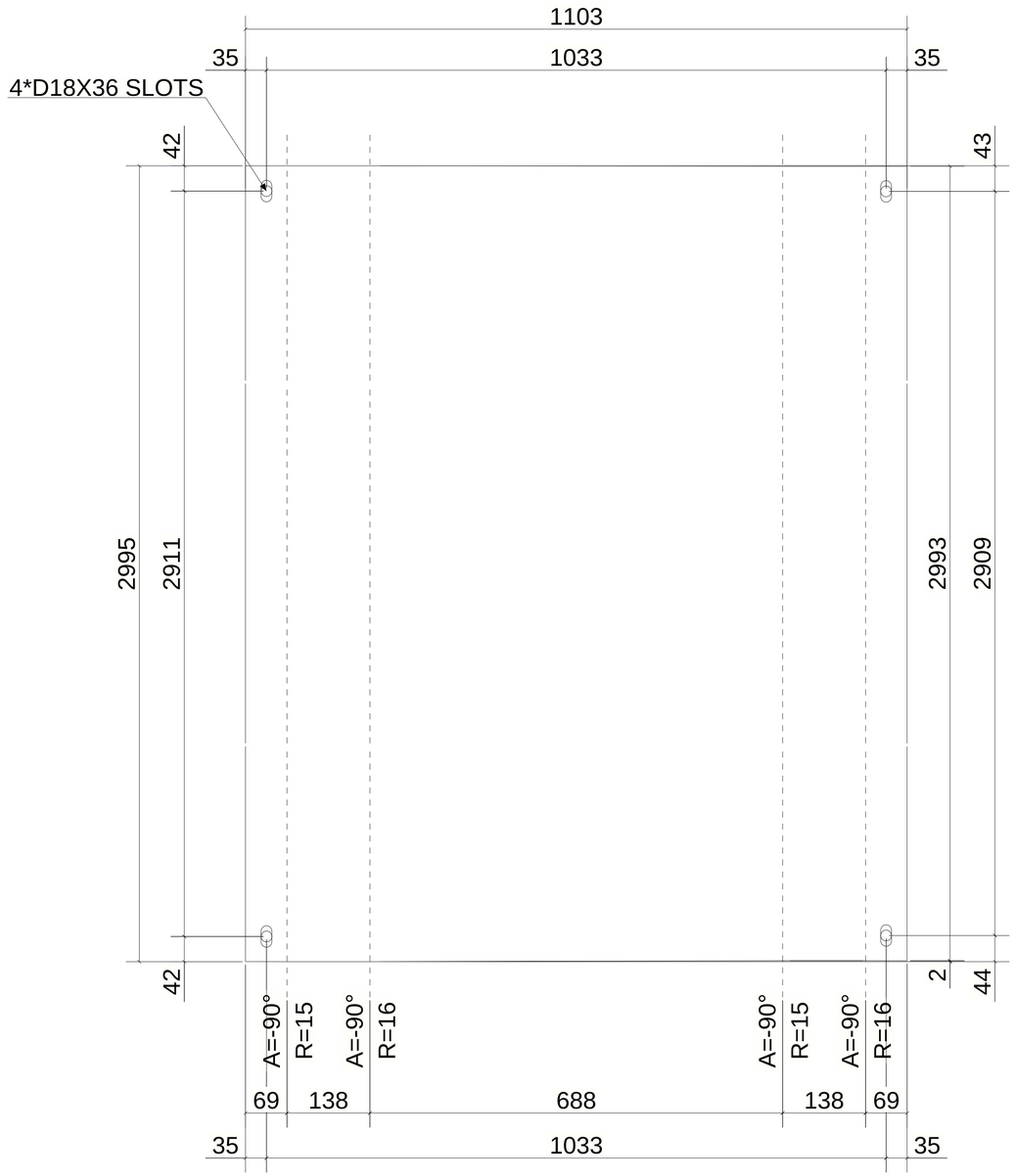

UNFOLDED VIEW

1 *REQUIRED AS DRAWN MARKED* Z16-CHQ007

6 October Monorail
Engineering Unit
Valid For Construction

GENERAL NOTES:

1. THE DIMENSIONS SHOWN ARE NOMINAL (IN MILLIMETERS), U.N.O.
2. WELD SIZESHALL BE AISC MINIMUM OF 6 mm UNLESS NOTED OTHERWISE.
3. ALL FIELD WELDS SHALL BE INSPECTED PER QUALITY ASSURANCE AND SPECIAL INSPECTIONS.

REFERENCE DRAWINGS

1	93M-BOA-NAT-LOT-04833
2	93M-BOA-NAT-LOT-09170
3	93M-BOA-NAT-LOT-01976
4	93M-BOA-NAT-LOT-20021
5	
6	
7	
8	
9	

6TH OF OCTOBER CITY RAIL TRANSIT MONORAIL

The Authority | Consultant | Main Contractor | Structural Designer

KEY PLAN:

SCALE: AS SHOWN | SHOP DRAWING | DATE: 08/29/2023

REV	DATE	DSG.	CHK.	APP.	AMENDMENTS	STATUS
B	08/29/2023	M.KH	M.KH	DR.M.M	ISSUED FOR INFORMATION	IFI
A	09/21/2022	M.KH	M.KH	DR.M.M	ISSUED FOR INFORMATION	IFI

DRAWING TITLE
6TH OF OCTOBER MONORAIL
SERVICE WALKWAYS
ZONE(1016)
Z16-CHQ007

Project Code	Rubric	Initiator	Lot	Ref	Number	Revision
93M	0476	ACC	60DEP	DWG	16084	B

Tekla structures

Same comments as
93M-0476-ACC-60DEP-DWG-16053-B.

REVIEWED WITH COMMENT
MONORAILS PROJECT

MATERIAL LIST FOR ASSEMBLY MK'D Z16-CHQ032						
Mark	Profile	GRADE	No.	Length	Area	Weight
Z16-CHQ032	CHQD5*1103.4	S235JR	1	3076	6.61	128.45
				Total	6.61	128.45

BOLT LIST:-

BOLT \ STUD	BOLT DESCRIPTION	QTY	FINISH
BOLT	B1N2W16 X 55 A325M	4	

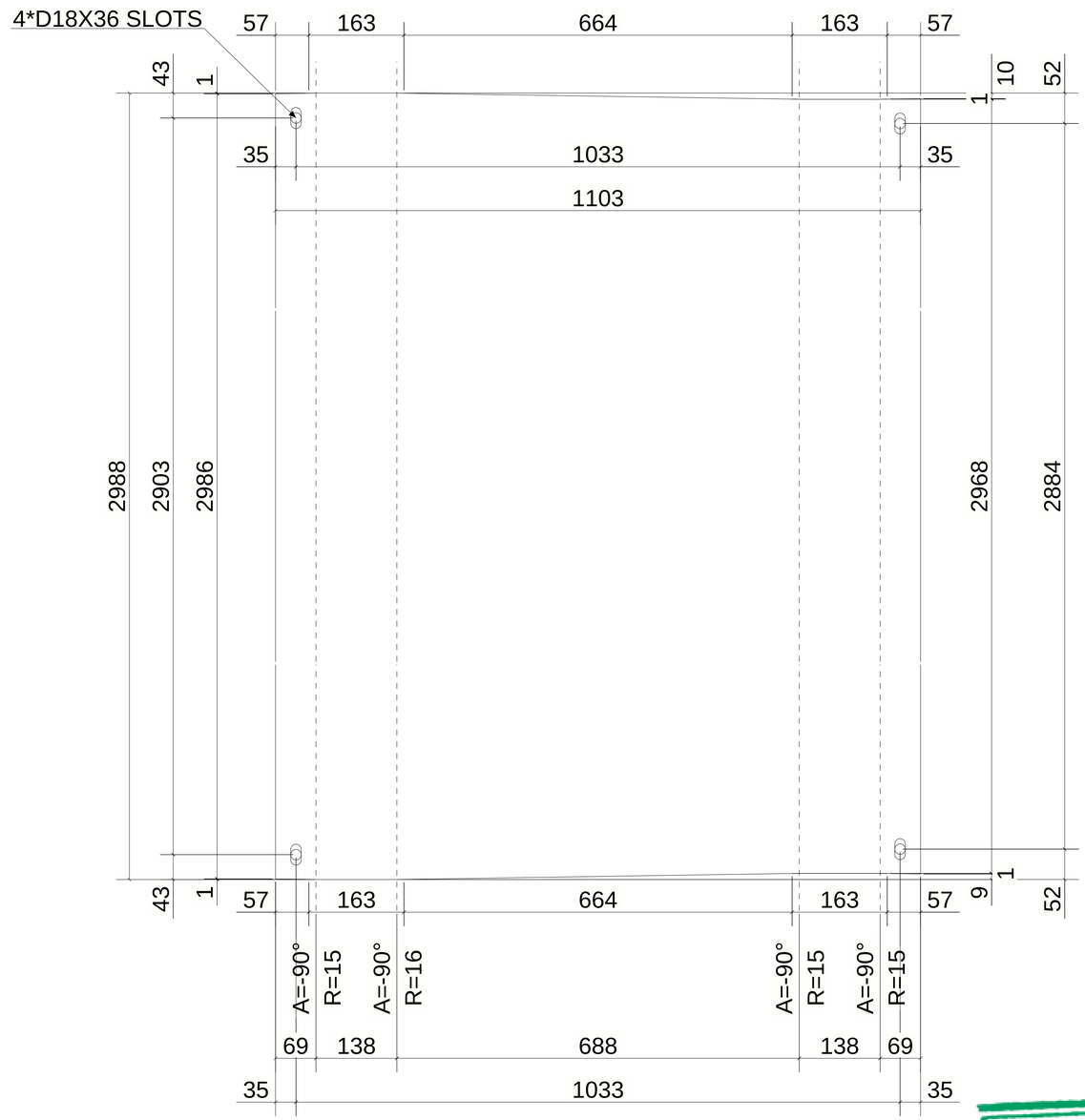

UNFOLDED VIEW

1 *REQUIRED AS DRAWN MARKED* Z16-CHQ032

6 October Monorail
Engineering Unit
Valid For Construction

GENERAL NOTES:

1. THE DIMENSIONS SHOWN ARE NOMINAL (IN MILLIMETERS), U.N.O.
2. WELD SIZESHALL BE AISC MINIMUM OF 6 mm UNLESS NOTED OTHERWISE.
3. ALL FIELD WELDS SHALL BE INSPECTED PER QUALITY ASSURANCE AND SPECIAL INSPECTIONS.

REFERENCE DRAWINGS

1	93M-BOA-NAT-LOT-04833
2	93M-BOA-NAT-LOT-09170
3	93M-BOA-NAT-LOT-01976
4	93M-BOA-NAT-LOT-20021
5	
6	
7	
8	
9	

6TH OF OCTOBER CITY RAIL TRANSIT MONORAIL

The Authority | Consultant: Hill International | Main Contractor: ORASCOM CONSTRUCTION / BOMBARDIER | Structural Designer: INNOVA TRANSPORTATION

KEY PLAN:

SCALE: AS SHOWN | SHOP DRAWING | DATE: 08/29/2023

REV	DATE	DSG.	CHK.	APP.	AMENDMENTS	STATUS
B	08/29/2023	M.KH	M.KH	DR.M.M	ISSUED FOR INFORMATION	IFI
A	09/21/2022	M.KH	M.KH	DR.M.M	ISSUED FOR INFORMATION	IFI

DRAWING TITLE
6TH OF OCTOBER MONORAIL
SERVICE WALKWAYS
ZONE(1016)
Z16-CHQ032

Project Code	Rubric	Initiator	Lot	Ref	Number	Revision
93M	047	6ACC	60DE	PDWG	16085	B

Tekla structures

Same comments as
93M-0476-ACC-60DEP-DWG-16053-B.

REVIEWED WITH COMMENT
MONORAILS PROJECT

MATERIAL LIST FOR ASSEMBLY MK'D Z16-CHQ003						
Mark	Profile	GRADE	No.	Length	Area	Weight
Z16-CHQ003	CHQD5*1103.4	S235JR	1	3077	6.60	128.33
				Total	6.60	128.33

BOLT LIST:-

BOLT \ STUD	BOLT DESCRIPTION		QTY	FINISH
BOLT	B1N2W16 X 50	A325M	2	
BOLT	B1N2W16 X 55	A325M	2	

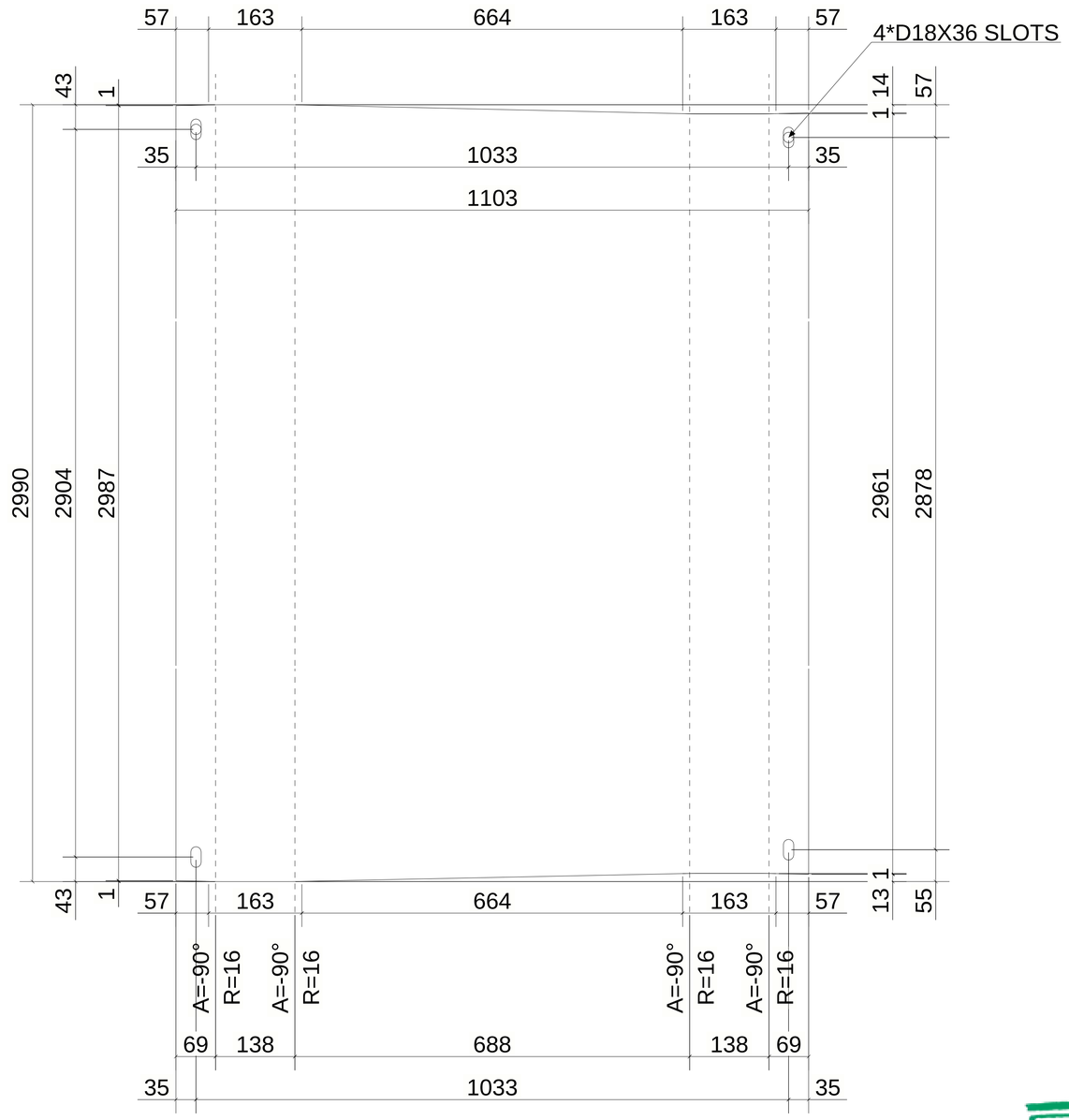

UNFOLDED VIEW

1 *REQUIRED AS DRAWN MARKED* Z16-CHQ003

6 October: Monorail
Engineering Unit
Valid For Construction

GENERAL NOTES:

1. THE DIMENSIONS SHOWN ARE NOMINAL (IN MILLIMETERS), U.N.O.
2. WELD SIZESHALL BE AISC MINIMUM OF 6 mm UNLESS NOTED OTHERWISE.
3. ALL FIELD WELDS SHALL BE INSPECTED PER QUALITY ASSURANCE AND SPECIAL INSPECTIONS.

REFERENCE DRAWINGS

1	93M-BOA-NAT-LOT-04833
2	93M-BOA-NAT-LOT-09170
3	93M-BOA-NAT-LOT-01976
4	93M-BOA-NAT-LOT-20021
5	
6	
7	
8	
9	

6TH OF OCTOBER CITY RAIL TRANSIT MONORAIL

The Authority — Hill International (Consultant) — ORASCOM / BOMBARDIER (Main Contractor) — INNOVA (Structural Designer)

KEY PLAN:

SCALE: AS SHOWN | SHOP DRAWING | DATE: 08/29/2023

REV	DATE	DSG.	CHK.	APP.	AMENDMENTS	STATUS
B	08/29/2023	M.KH	M.KH	DR.M.M	ISSUED FOR INFORMATION	IFI
A	09/21/2022	M.KH	M.KH	DR.M.M	ISSUED FOR INFORMATION	IFI

DRAWING TITLE
6TH OF OCTOBER MONORAIL
SERVICE WALKWAYS
ZONE(1016)
Z16-CHQ003

Project Code	Rubric	Initiator	Lot	Ref	Number	Revision
93	M047	6	ACC60	DE	PDWG	16086	B

Tekla structures

Same comments as
93M-0476-ACC-60DEP-DWG-16053-B.

REVIEWED WITH COMMENT
MONORAILS PROJECT

MATERIAL LIST FOR ASSEMBLY MK'D Z16-CHQ038						
Mark	Profile	GRADE	No.	Length	Area	Weight
Z16-CHQ038	CHQD5*1103.4	S235JR	1	2087	4.41	85.72
				Total	4.41	85.72

BOLT LIST:-

BOLT \ STUD	BOLT DESCRIPTION	QTY	FINISH
BOLT	B1N2W16 X 55 A325M	4	

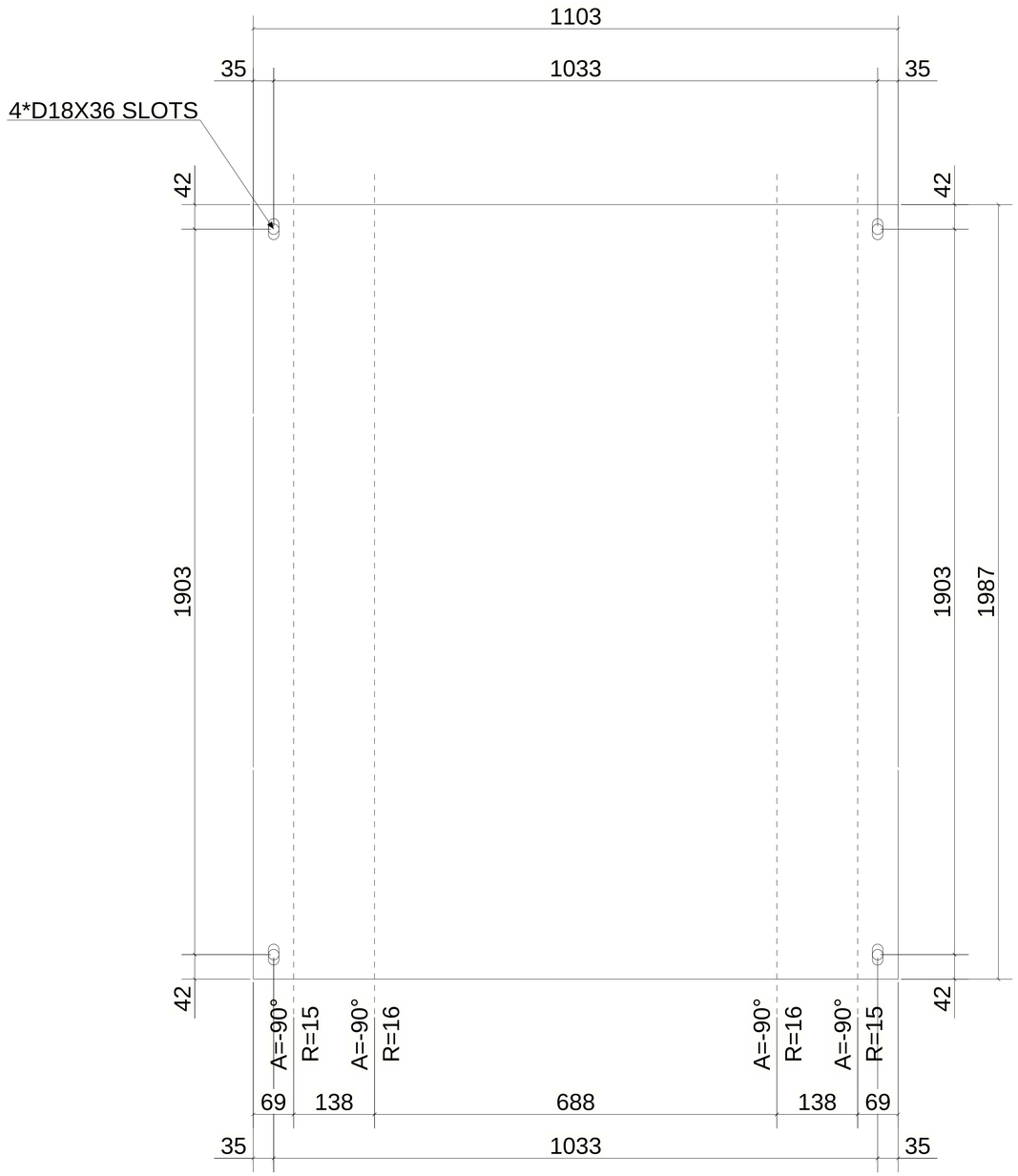

UNFOLDED VIEW

1 *REQUIRED AS DRAWN MARKED* Z16-CHQ038

6 October: Monorail
Engineering Unit
Valid For Construction

GENERAL NOTES:

1. THE DIMENSIONS SHOWN ARE NOMINAL (IN MILLIMETERS), U.N.O.
2. WELD SIZESHALL BE AISC MINIMUM OF 6 mm UNLESS NOTED OTHERWISE.
3. ALL FIELD WELDS SHALL BE INSPECTED PER QUALITY ASSURANCE AND SPECIAL INSPECTIONS.

REFERENCE DRAWINGS

1	93M-BOA-NAT-LOT-04833
2	93M-BOA-NAT-LOT-09170
3	93M-BOA-NAT-LOT-01976
4	93M-BOA-NAT-LOT-20021
5	
6	
7	
8	
9	

6TH OF OCTOBER CITY RAIL TRANSIT MONORAIL

The Authority — Hill International (Consultant) — Main Contractor — Structural Designer

KEY PLAN:

SCALE	SHOP DRAWING	DATE
AS SHOWN		08/29/2023

REV	DATE	DSG.	CHK.	APP.	AMENDMENTS	STATUS
B	08/29/2023	M.KH	M.KH	DR.M.M	ISSUED FOR INFORMATION	IFI
A	09/21/2022	M.KH	M.KH	DR.M.M	ISSUED FOR INFORMATION	IFI

DRAWING TITLE
6TH OF OCTOBER MONORAIL
SERVICE WALKWAYS
ZONE(1016)
Z16-CHQ038

Project Code	Rubric	Initiator	Lot	Ref	Number	Revision
93	M047	6ACC	60DE	PDWG	16087	B

Tekla structures

Same comments as
93M-0476-ACC-60DEP-DWG-16053-B.

REVIEWED WITH COMMENT
MONORAILS PROJECT

MATERIAL LIST FOR ASSEMBLY MK'D Z16-CHQ022						
Mark	Profile	GRADE	No.	Length	Area	Weight
Z16-CHQ022	CHQD5*1103.4	S235JR	1	3088	6.63	128.92
				Total	6.63	128.92

BOLT LIST:-

BOLT \ STUD	BOLT DESCRIPTION	QTY	FINISH
BOLT	B1N2W16 X 55 A325M	4	

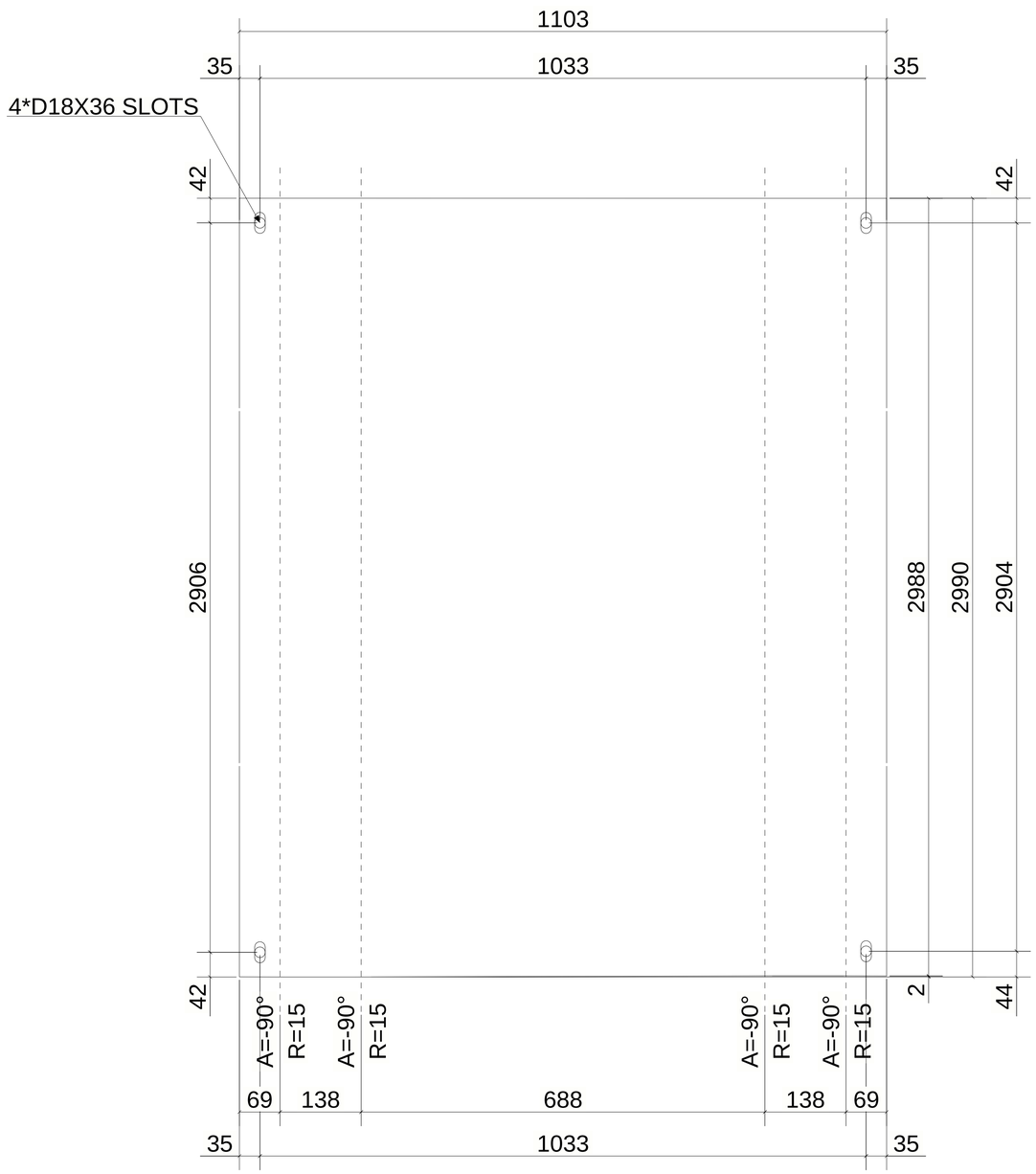

UNFOLDED VIEW

1 *REQUIRED AS DRAWN MARKED* Z16-CHQ022

6 October Monorail
Engineering Unit
Valid For Construction

GENERAL NOTES:

1. THE DIMENSIONS SHOWN ARE NOMINAL (IN MILLIMETERS), U.N.O.
2. WELD SIZESHALL BE AISC MINIMUM OF 6 mm UNLESS NOTED OTHERWISE.
3. ALL FIELD WELDS SHALL BE INSPECTED PER QUALITY ASSURANCE AND SPECIAL INSPECTIONS.

REFERENCE DRAWINGS

1	93M-BOA-NAT-LOT-04833
2	93M-BOA-NAT-LOT-09170
3	93M-BOA-NAT-LOT-01976
4	93M-BOA-NAT-LOT-20021
5	
6	
7	
8	
9	

6TH OF OCTOBER CITY RAIL TRANSIT MONORAIL

The Authority — Hill International Consultant — Main Contractor — Structural Designer

KEY PLAN:

SCALE: AS SHOWN | SHOP DRAWING | DATE: 08/29/2023

REV	DATE	DSG.	CHK.	APP.	AMENDMENTS	STATUS
B	08/29/2023	M.KH	M.KH	DR.M.M	ISSUED FOR INFORMATION	IFI
A	09/21/2022	M.KH	M.KH	DR.M.M	ISSUED FOR INFORMATION	IFI

DRAWING TITLE
6TH OF OCTOBER MONORAIL
SERVICE WALKWAYS
ZONE(1016)
Z16-CHQ022

Project Code	Rubric	Initiator	Lot	Ref	Number	Revision
93M	047	6ACC	60DEP	DWG	16088	B

Tekla structures

Same comments as
93M-0476-ACC-60DEP-DWG-16053-B.

REVIEWED WITH COMMENT
MONORAILS PROJECT

MATERIAL LIST FOR ASSEMBLY MK'D Z16-CHQ020						
Mark	Profile	GRADE	No.	Length	Area	Weight
Z16-CHQ020	CHQD5*1103.4	S235JR	1	2087	4.41	85.74
				Total	4.41	85.74

BOLT LIST:-

BOLT \ STUD	BOLT DESCRIPTION	QTY	FINISH
BOLT	B1N2W16 X 55 A325M	4	

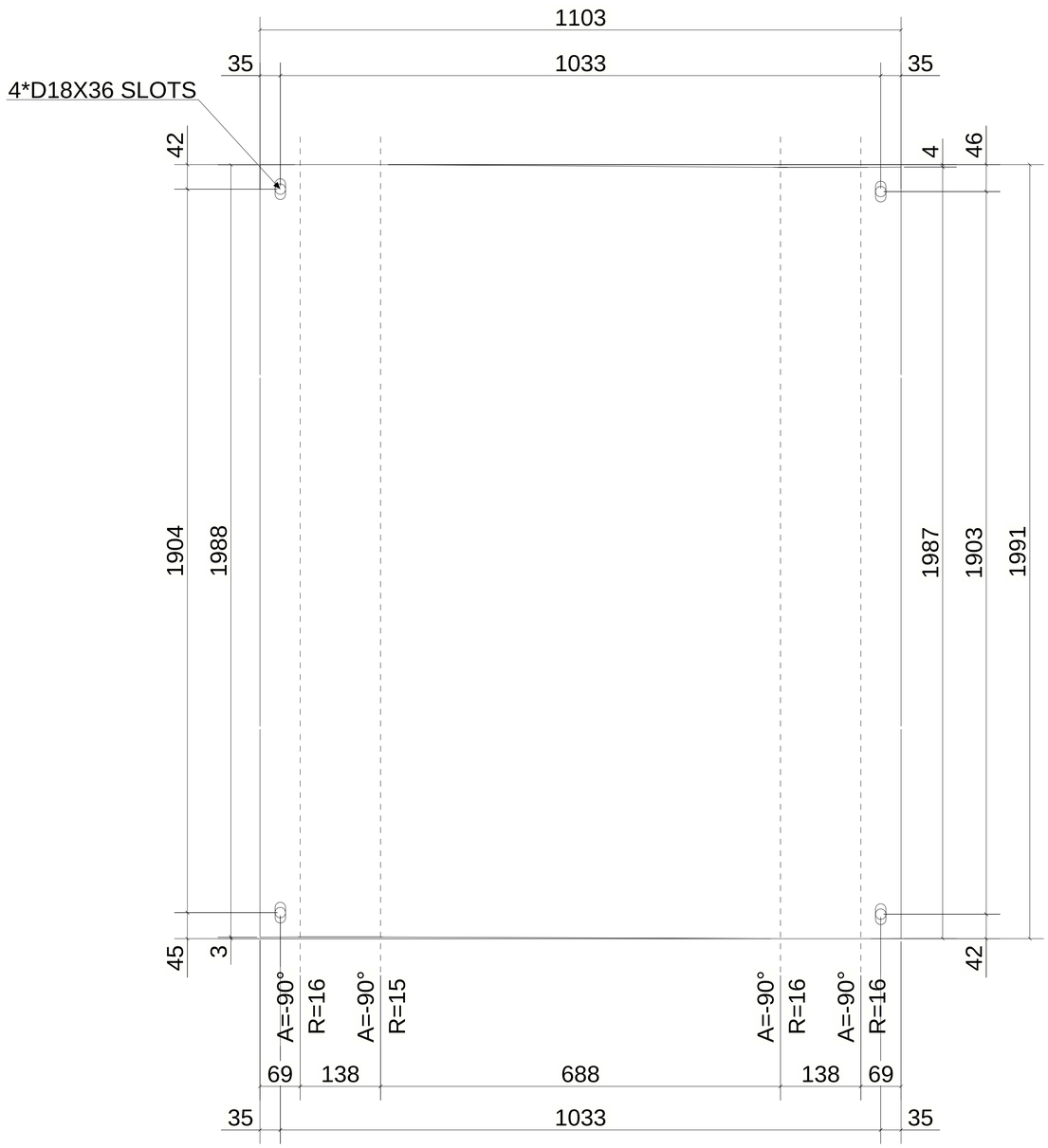

UNFOLDED VIEW

1 *REQUIRED AS DRAWN MARKED* Z16-CHQ020

6 October Monorail
Engineering Unit
Valid For Construction

GENERAL NOTES:

1. THE DIMENSIONS SHOWN ARE NOMINAL (IN MILLIMETERS), U.N.O.
2. WELD SIZESHALL BE AISC MINIMUM OF 6 mm UNLESS NOTED OTHERWISE.
3. ALL FIELD WELDS SHALL BE INSPECTED PER QUALITY ASSURANCE AND SPECIAL INSPECTIONS.

REFERENCE DRAWINGS

1	93M-BOA-NAT-LOT-04833
2	93M-BOA-NAT-LOT-09170
3	93M-BOA-NAT-LOT-01976
4	93M-BOA-NAT-LOT-20021
5	
6	
7	
8	
9	

6TH OF OCTOBER CITY RAIL TRANSIT MONORAIL

The Authority | Consultant: Hill International | Main Contractor: ORASCOM CONSTRUCTION, The Arab Contractors, BOMBARDIER | Structural Designer: INNOVA TRANSPORTATION

KEY PLAN:

SCALE: AS SHOWN | SHOP DRAWING | DATE: 08/29/2023

REV	DATE	DSG.	CHK.	APP.	AMENDMENTS	STATUS
B	08/29/2023	M.KH	M.KH	DR.M.M	ISSUED FOR INFORMATION	IFI
A	09/21/2022	M.KH	M.KH	DR.M.M	ISSUED FOR INFORMATION	IFI

DRAWING TITLE
6TH OF OCTOBER MONORAIL
SERVICE WALKWAYS
ZONE(1016)
Z16-CHQ020

Project Code	Rubric	Initiator	Lot	Ref	Number	Revision
93M	0476	ACC	60	DEP	DWG16089	B

Tekla structures

Same comments as
93M-0476-ACC-60DEP-DWG-16053-B.

REVIEWED WITH COMMENT
MONORAILS PROJECT

MATERIAL LIST FOR ASSEMBLY MK'D Z16-CHQ017

Mark	Profile	GRADE	No.	Length	Area	Weight
Z16-CHQ017	CHQD5*1103.4	S235JR	1	3088	6.63	128.95
				Total	6.63	128.95

BOLT LIST:-

BOLT \ STUD	BOLT DESCRIPTION	QTY	FINISH
BOLT	B1N2W16 X 55 A325M	4	

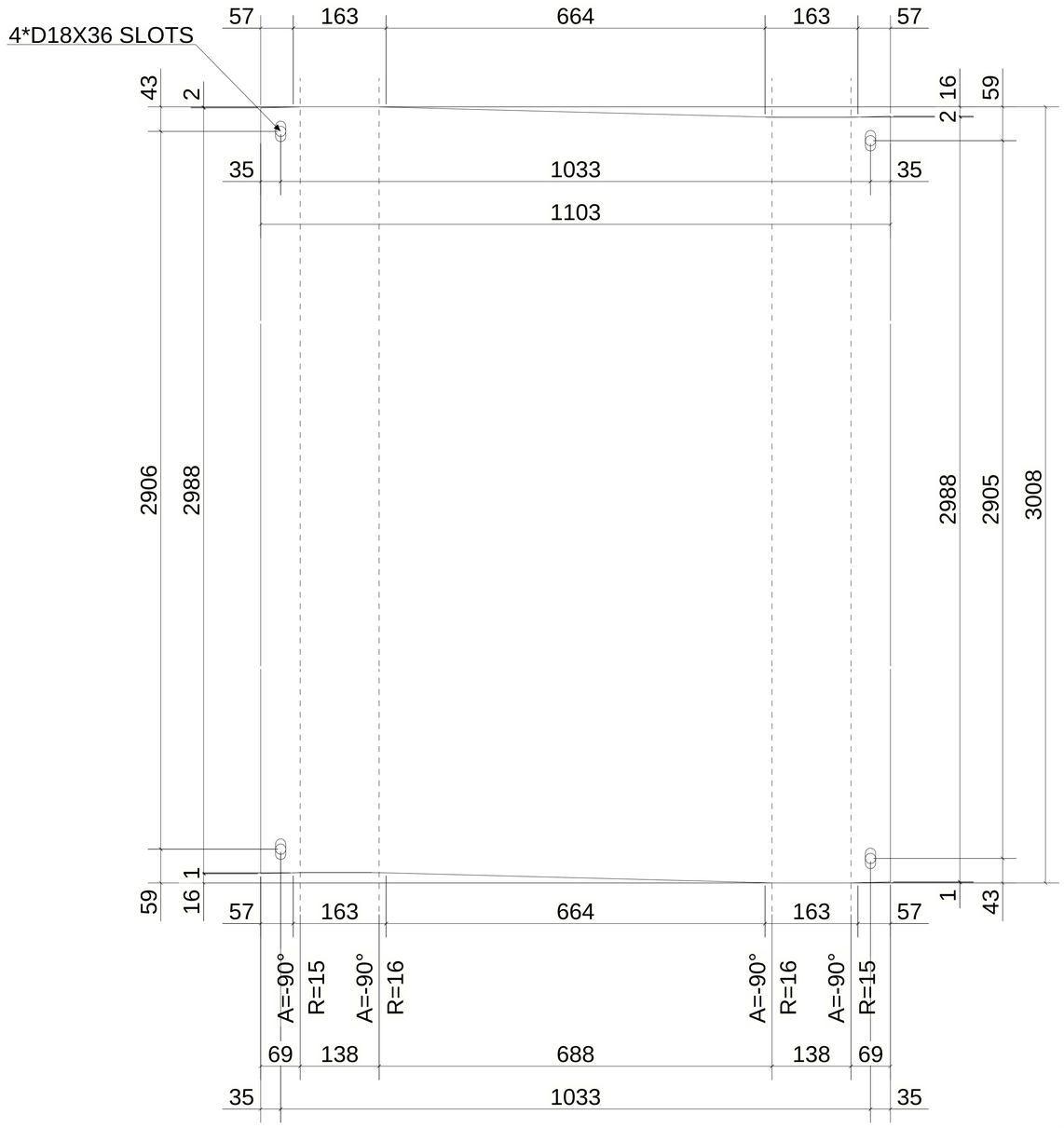

UNFOLDED VIEW

1 *REQUIRED AS DRAWN MARKED* Z16-CHQ017

GENERAL NOTES:

1. THE DIMENSIONS SHOWN ARE NOMINAL (IN MILLIMETERS), U.N.O.
2. WELD SIZESHALL BE AISC MINIMUM OF 6 mm UNLESS NOTED OTHERWISE.
3. ALL FIELD WELDS SHALL BE INSPECTED PER QUALITY ASSURANCE AND SPECIAL INSPECTIONS.

REFERENCE DRAWINGS

1	93M-BOA-NAT-LOT-04833
2	93M-BOA-NAT-LOT-09170
3	93M-BOA-NAT-LOT-01976
4	93M-BOA-NAT-LOT-20021
5	
6	
7	
8	
9	

6TH OF OCTOBER CITY RAIL TRANSIT MONORAIL

The Authority — Consultant — Main Contractor — Structural Designer

6 October Monorail
Engineering Unit
Valid For Construction

KEY PLAN:

SCALE: AS SHOWN | SHOPDRAWING | DATE: 08/29/2023

DRAWING TITLE
6TH OF OCTOBER MONORAIL
SERVICE WALKWAYS
ZONE(1016)
Z16-CHQ017

REV	DATE	DSG.	CHK.	APP.	AMENDMENTS	STATUS
B	08/29/2023	M.KH	M.KH	DR.M.M	ISSUED FOR INFORMATION	IFI
A	09/21/2022	M.KH	M.KH	DR.M.M	ISSUED FOR INFORMATION	IFI

Project Code	Rubric	Initiator	Lot	Ref	Number	Revision
93M	047	6ACC	60DEP	DWG	160900	B

Tekla structures

Same comments as
93M-0476-ACC-60DEP-DWG-16053-B.

REVIEWED WITH COMMENT MONORAILS PROJECT

MATERIAL LIST FOR ASSEMBLY MK'D Z16-CHQ016						
Mark	Profile	GRADE	No.	Length	Area	Weight
Z16-CHQ016	CHQD5*1103.4	S235JR	1	3098	6.65	129.34
				Total	6.65	129.34

BOLT LIST:-

BOLT \ STUD	BOLT DESCRIPTION		QTY	FINISH
BOLT	B1N2W16 X 55	A325M	4	

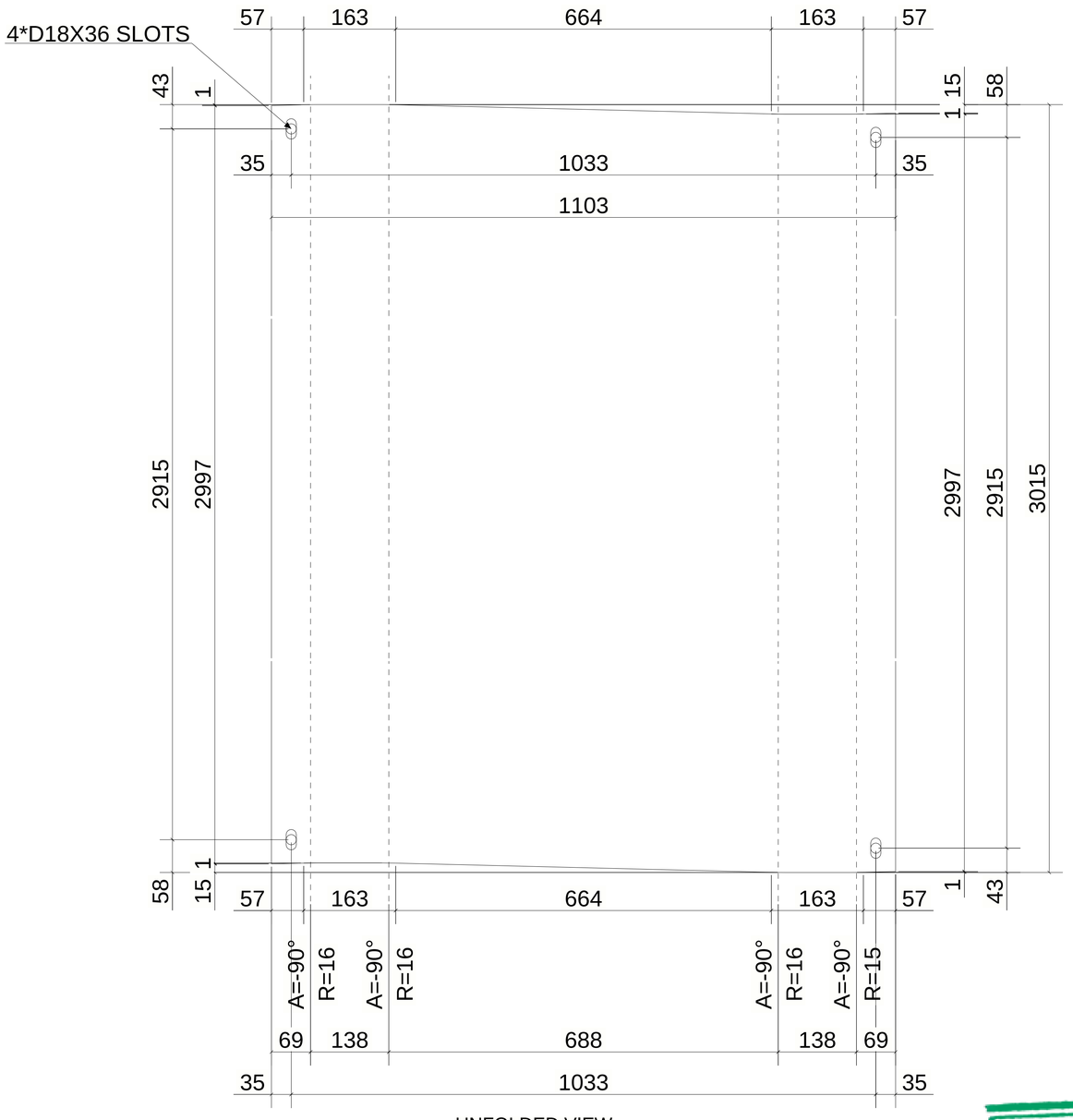

UNFOLDED VIEW

1 *REQUIRED AS DRAWN MARKED* Z16-CHQ016

6 October Monorail Engineering Unit
Valid For Construction

GENERAL NOTES:

1. THE DIMENSIONS SHOWN ARE NOMINAL (IN MILLIMETERS), U.N.O.
2. WELD SIZESHALL BE AISC MINIMUM OF 6 mm UNLESS NOTED OTHERWISE.
3. ALL FIELD WELDS SHALL BE INSPECTED PER QUALITY ASSURANCE AND SPECIAL INSPECTIONS.

REFERENCE DRAWINGS

1	93M-BOA-NAT-LOT-04833
2	93M-BOA-NAT-LOT-09170
3	93M-BOA-NAT-LOT-01976
4	93M-BOA-NAT-LOT-20021
5	
6	
7	
8	
9	

6TH OF OCTOBER CITY RAIL TRANSIT MONORAIL

The Authority — Hill International Consultant — ORASCOM BOMBARDIER Main Contractor — INNOVA Structural Designer

KEY PLAN:

SCALE	SHOPDRAWING	DATE
AS SHOWN		08/29/2023

REV	DATE	DSG.	CHK.	APP.	AMENDMENTS	STATUS
B	08/29/2023	M.KH	M.KH	DR.M.M	ISSUED FOR INFORMATION	IFI
A	09/21/2022	M.KH	M.KH	DR.M.M	ISSUED FOR INFORMATION	IFI

DRAWING TITLE
6TH OF OCTOBER MONORAIL SERVICE WALKWAYS ZONE(1016)
Z16-CHQ016

Project Code	Rubric	Initiator	Lot	Ref	Number	Revision
93M	0476	ACC	60DEP	DWG	16091	B

Tekla structures

Same comments as
93M-0476-ACC-60DEP-DWG-16053-B.

REVIEWED WITH COMMENT
MONORAILS PROJECT

MATERIAL LIST FOR ASSEMBLY MK'D Z16-CHQ027

Mark	Profile	GRADE	No.	Length	Area	Weight
Z16-CHQ027	CHQD5*1103.4	S235JR	1	3092	6.64	129.11
				Total	6.64	129.11

BOLT LIST:-

BOLT \ STUD	BOLT DESCRIPTION	QTY	FINISH
BOLT	B1N2W16 X 55 A325M	4	

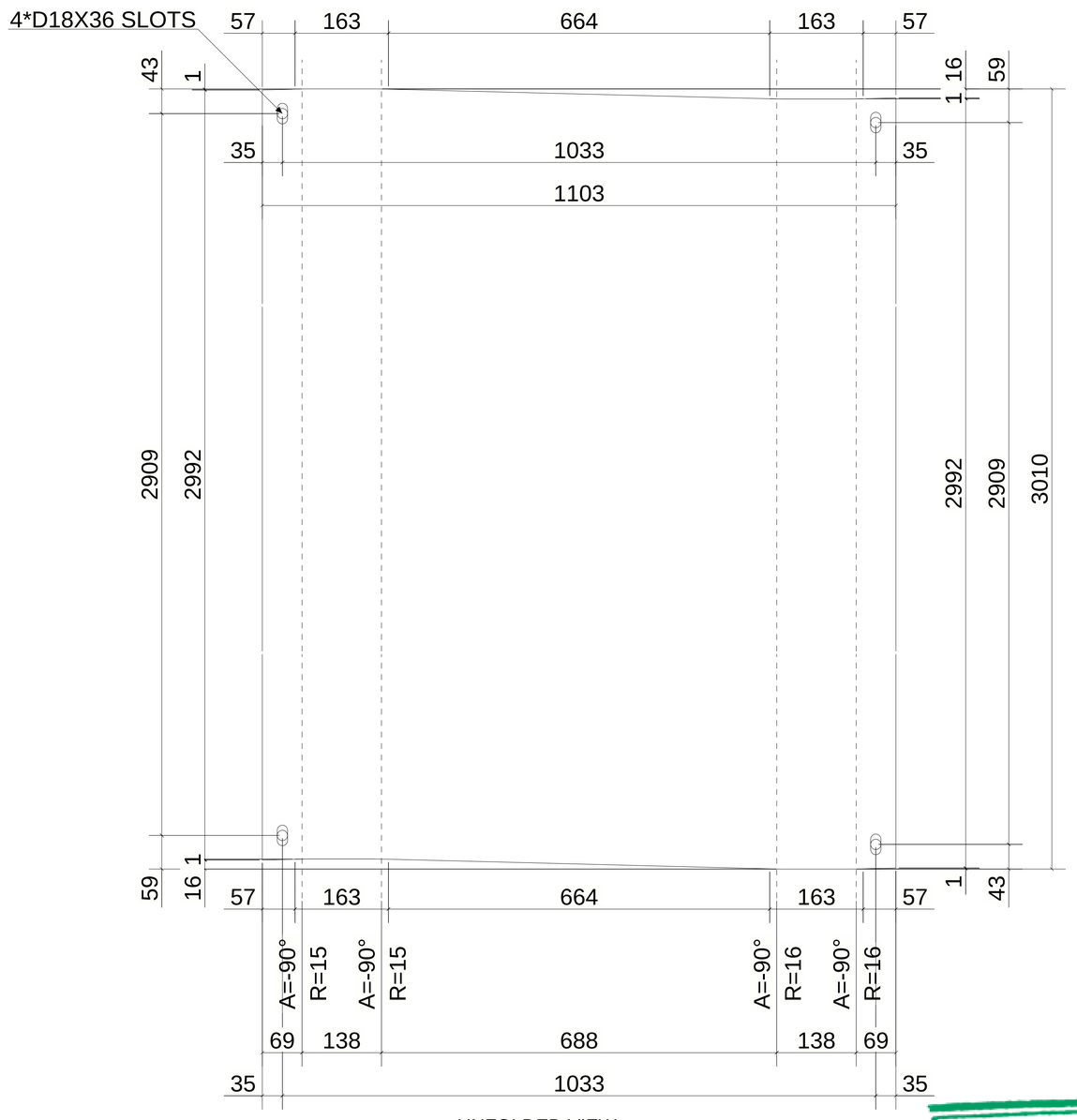

UNFOLDED VIEW

1 *REQUIRED AS DRAWN MARKED* Z16-CHQ027

6 October Monorail
Engineering Unit
Valid For Construction

GENERAL NOTES:

1. THE DIMENSIONS SHOWN ARE NOMINAL (IN MILLIMETERS), U.N.O.
2. WELD SIZESHALL BE AISC MINIMUM OF 6 mm UNLESS NOTED OTHERWISE.
3. ALL FIELD WELDS SHALL BE INSPECTED PER QUALITY ASSURANCE AND SPECIAL INSPECTIONS.

REFERENCE DRAWINGS

1	93M-BOA-NAT-LOT-04833
2	93M-BOA-NAT-LOT-09170
3	93M-BOA-NAT-LOT-01976
4	93M-BOA-NAT-LOT-20021
5	
6	
7	
8	
9	

6TH OF OCTOBER CITY RAIL TRANSIT MONORAIL

The Authority | Hill International Consultant | Main Contractor | Structural Designer

KEY PLAN:

SCALE: AS SHOWN | SHOP DRAWING | DATE: 08/29/2023

REV.	DATE	DSG.	CHK.	APP.	AMENDMENTS	STATUS
B	08/29/2023	M.KH	M.KH	DR.M.M	ISSUED FOR INFORMATION	IFI
A	09/21/2022	M.KH	M.KH	DR.M.M	ISSUED FOR INFORMATION	IFI

DRAWING TITLE
6TH OF OCTOBER MONORAIL
SERVICE WALKWAYS
ZONE(1016)
Z16-CHQ027

Project Code	Rubric	Initiator	Lot	Ref	Number	Revision
93M	047	6ACC	60DEP	DWG	16092	B

Tekla structures

Same comments as
93M-0476-ACC-60DEP-DWG-16053-B.

REVIEWED WITH COMMENT
MONORAILS PROJECT

MATERIAL LIST FOR ASSEMBLY MK'D Z16-CHQ015						
Mark	Profile	GRADE	No.	Length	Area	Weight
Z16-CHQ015	CHQD5*1103.4	S235JR	1	3064	6.58	127.97
				Total	6.58	127.97

BOLT LIST:-

BOLT \ STUD	BOLT DESCRIPTION	QTY	FINISH
BOLT	B1N2W16 X 55 A325M	4	

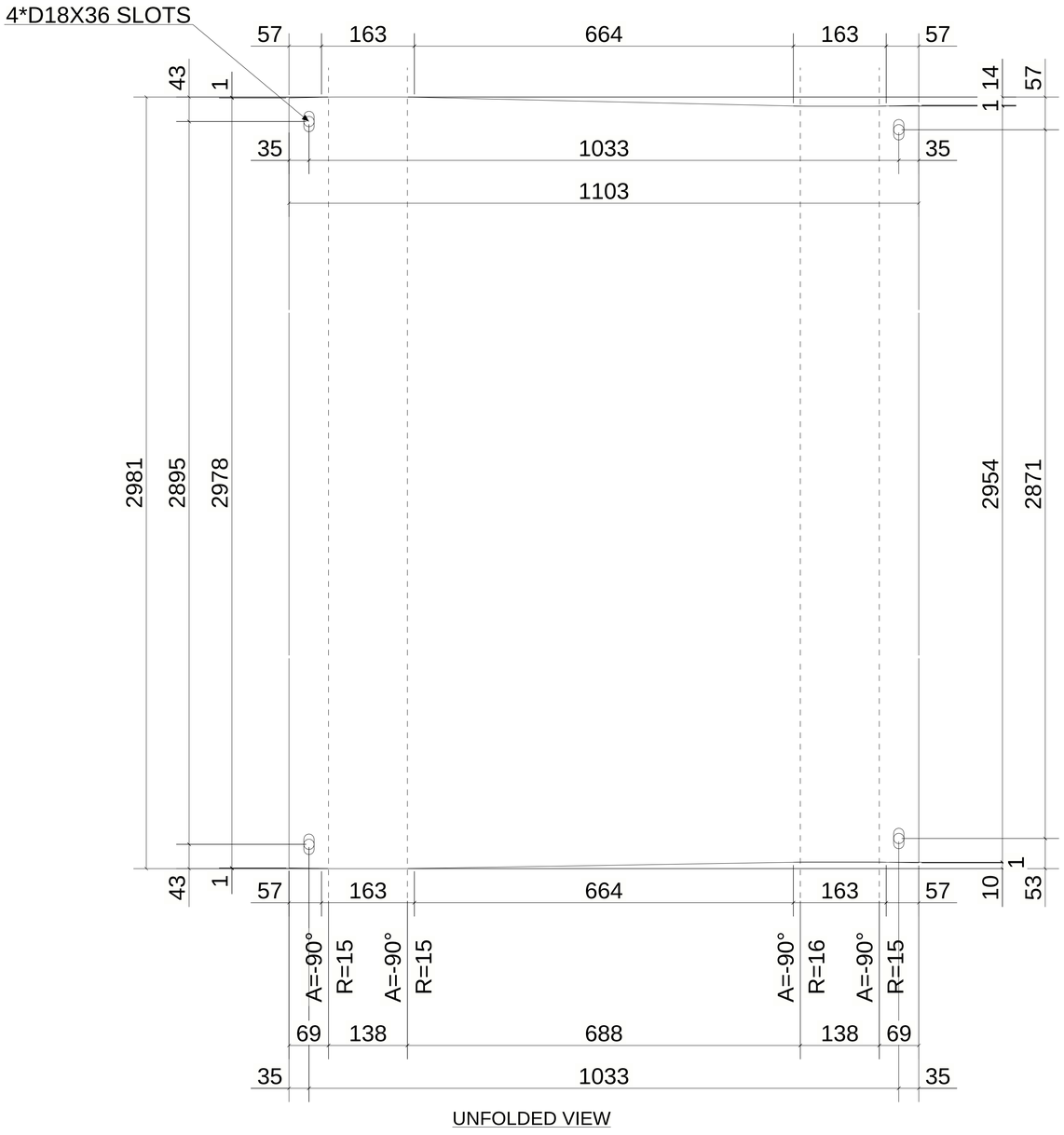

UNFOLDED VIEW

1 *REQUIRED AS DRAWN MARKED* Z16-CHQ015

6 October Monorail
Engineering Unit
Valid For Construction

GENERAL NOTES:

1. THE DIMENSIONS SHOWN ARE NOMINAL (IN MILLIMETERS), U.N.O.
2. WELD SIZESHALL BE AISC MINIMUM OF 6 mm UNLESS NOTED OTHERWISE.
3. ALL FIELD WELDS SHALL BE INSPECTED PER QUALITY ASSURANCE AND SPECIAL INSPECTIONS.

REFERENCE DRAWINGS

1	93M-BOA-NAT-LOT-04833
2	93M-BOA-NAT-LOT-09170
3	93M-BOA-NAT-LOT-01976
4	93M-BOA-NAT-LOT-20021
5	
6	
7	
8	
9	

6TH OF OCTOBER CITY RAIL TRANSIT MONORAIL

The Authority — Consultant — Main Contractor — Structural Designer

KEY PLAN:

SCALE: AS SHOWN | SHOP DRAWING | DATE: 08/29/2023

REV	DATE	DSG.	CHK.	APP.	AMENDMENTS	STATUS
B	08/29/2023	M.KH	M.KH	DR.M.M	ISSUED FOR INFORMATION	IFI
A	09/21/2022	M.KH	M.KH	DR.M.M	ISSUED FOR INFORMATION	IFI

DRAWING TITLE
6TH OF OCTOBER MONORAIL
SERVICE WALKWAYS
ZONE(1016)
Z16-CHQ015

Project Code	Rubric	Initiator	Lot	Ref	Number	Revision
93M	047	6ACC	60DEP	DWG	16093	B

Tekla structures

Approval is subject to approval of coordination package between multi-discipline.

REVIEWED WITH COMMENT
MONORAILS PROJECT

MATERIAL LIST FOR ASSEMBLY MK'DZ16-PO002

Mark	Profile	GRADE	No.	Length	Area	Weight
Z16-PO002	L70*7	S235JR	1	1181	0.33	8.63
W831	PIPE2SCH40	S235JR	1	25	0.01	0.14
W848	PL10*25	S355JR	1	98	0.01	0.19
W851	PL16*100	S355JR	1	160	0.04	2.01
				Total	0.39	10.96

BOLT LIST:-

BOLT \ STUD	BOLT DESCRIPTION	QTY	FINISH
BOLT	B1N2W16 X 60 A325M	2	

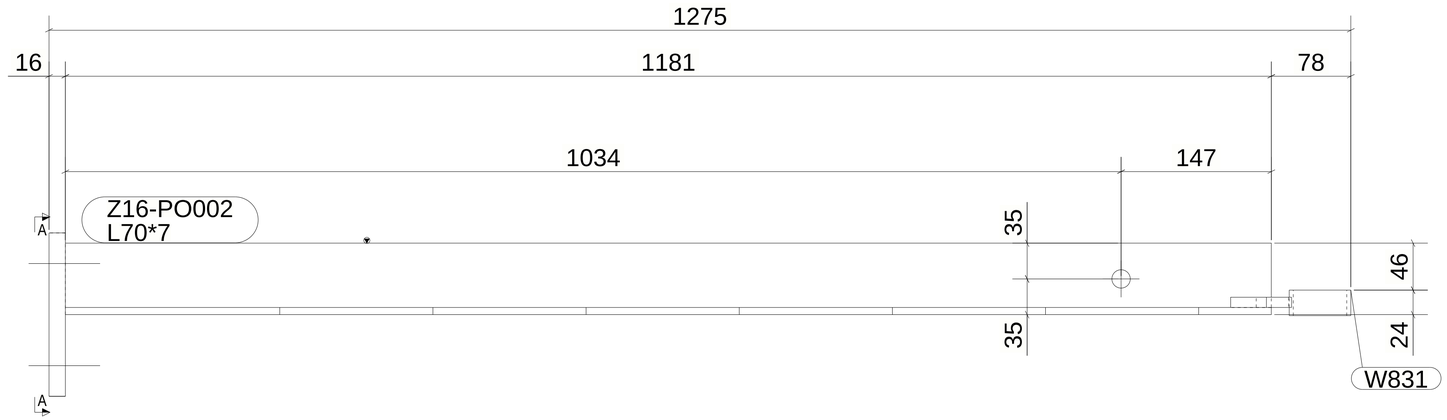

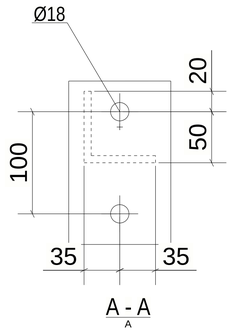

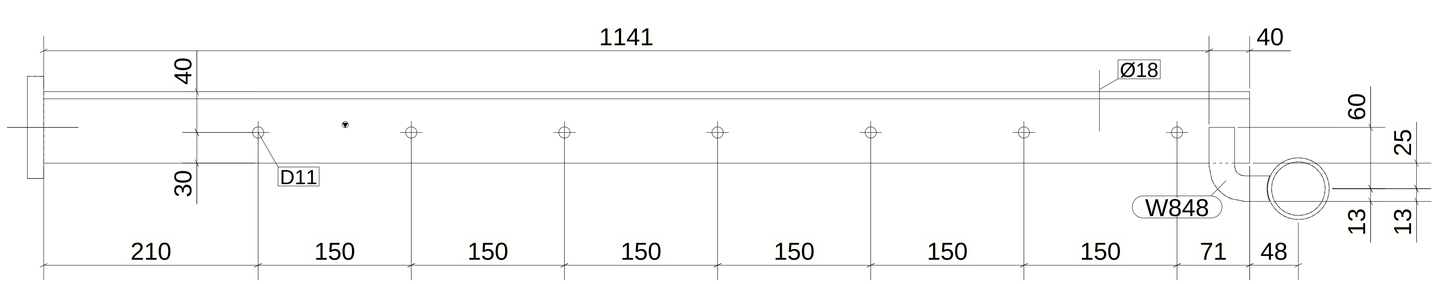

1 *REQUIRED AS DRAWN MARKED* Z16-PO002

6 October Monorail
Engineering Unit
Valid For Construction

GENERAL NOTES:

1. THE DIMENSIONS SHOWN ARE NOMINAL (IN MILLIMETERS), U.N.O.
2. WELD SIZESHALL BE AISC MINIMUM OF 6 mm UNLESS NOTED OTHERWISE.
3. ALL FIELD WELDS SHALL BE INSPECTED PER QUALITY ASSURANCE AND SPECIAL INSPECTIONS.

REFERENCE DRAWINGS

1	93M-BOA-NAT-LOT-04833
2	93M-BOA-NAT-LOT-09170
3	93M-BOA-NAT-LOT-01976
4	93M-BOA-NAT-LOT-20021
5	
6	
7	
8	
9	

6TH OF OCTOBER CITY RAIL TRANSIT MONORAIL

The Authority | Consultant: Hill International | Main Contractor: ORASCOM CONSTRUCTION, BOMBARDIER | Structural Designer: INNOVA TRANSPORTATION

KEY PLAN:

SCALE: AS SHOWN | SHOP DRAWING | DATE: 08/29/2023

DRAWING TITLE
6TH OF OCTOBER MONORAIL
SERVICE WALKWAYS
ZONE(1016)
Z16-PO002

REV	DATE	DSG.	CHK.	APP.	AMENDMENTS	STATUS
B	08/29/2023	M.KH	M.KH	DR.M.M	ISSUED FOR INFORMATION	IFI
A	09/21/2022	M.KH	M.KH	DR.M.M	ISSUED FOR INFORMATION	IFI

Project Code	Rubric	Initiator	Lot	Ref	Number	Revision
93M	047	6ACC	60DE	PDWG	16094	B

Tekla structures

Approval is subject to approval of coordination package between multi-discipline.

REVIEWED WITH COMMENT
MONORAILS PROJECT

MATERIAL LIST FOR ASSEMBLY MK'DZ16-PO007

Mark	Profile	GRADE	No.	Length	Area	Weight
Z16-PO007	L70*7	S235JR	1	1181	0.33	8.63
W831	PIPE2SCH40	S235JR	1	25	0.01	0.14
W848	PL10*25	S355JR	1	98	0.01	0.19
W851	PL16*100	S355JR	1	160	0.04	2.01
				Total	0.39	10.96

BOLT LIST:-

BOLT \ STUD	BOLT DESCRIPTION		QTY	FINISH
BOLT	B1N2W16 X 60	A325M	2	

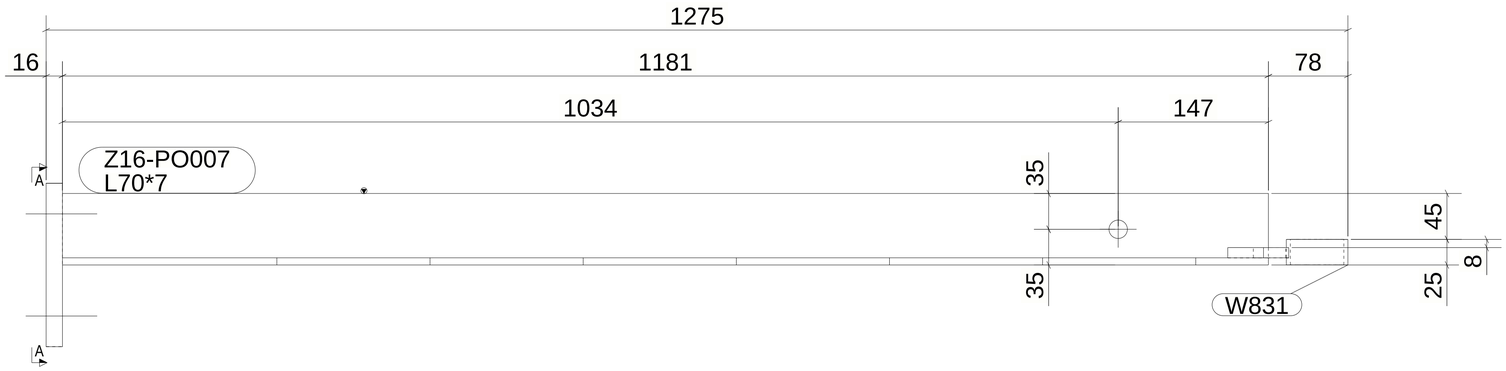

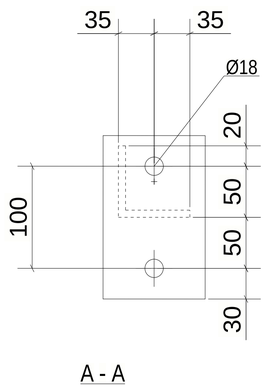

A - A

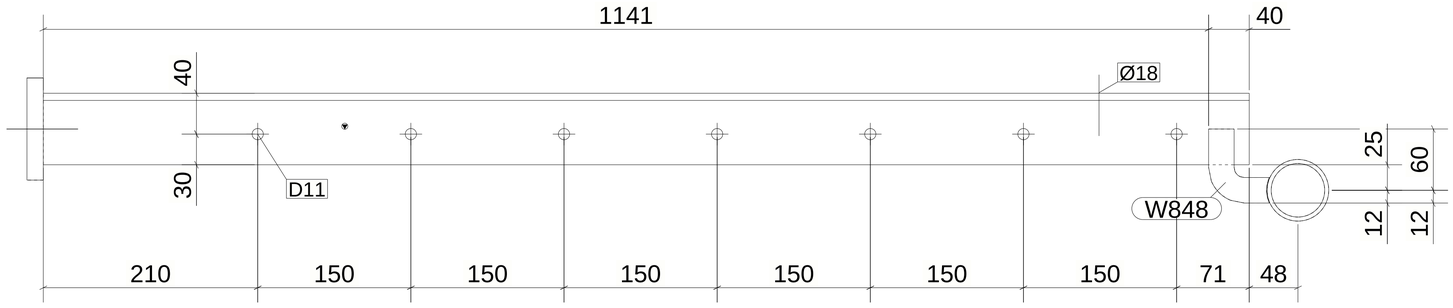

1 *REQUIRED AS DRAWN MARKED* Z16-PO007

6 October Monorail
Engineering Unit
Valid For Construction

GENERAL NOTES:

1. THE DIMENSIONS SHOWN ARE NOMINAL (IN MILLIMETERS), U.N.O.
2. WELD SIZESHALL BE AISC MINIMUM OF 6 mm UNLESS NOTED OTHERWISE.
3. ALL FIELD WELDS SHALL BE INSPECTED PER QUALITY ASSURANCE AND SPECIAL INSPECTIONS.

REFERENCE DRAWINGS

1	93M-BOA-NAT-LOT-04833
2	93M-BOA-NAT-LOT-09170
3	93M-BOA-NAT-LOT-01976
4	93M-BOA-NAT-LOT-20021
5	
6	
7	
8	
9	

6TH OF OCTOBER CITY RAIL TRANSIT MONORAIL

The Authority | Consultant: Hill International | Main Contractor: ORASCOM CONSTRUCTION / BOMBARDIER | Structural Designer: INNOVA TRANSPORTATION

KEY PLAN:

SCALE: AS SHOWN | SHOP DRAWING | DATE: 08/29/2023

DRAWING TITLE
6TH OF OCTOBER MONORAIL
SERVICE WALKWAYS
ZONE(1016)
Z16-PO007

REV	DATE	DSG.	CHK.	APP.	AMENDMENTS	STATUS
B	09/29/2023	M.KH	M.KH	DR.M.M	ISSUED FOR INFORMATION	IFI
A	09/21/2022	M.KH	M.KH	DR.M.M	ISSUED FOR INFORMATION	IFI

Project Code	Rubric	Initiator	Lot	Ref	Number	Revision
93M	047	6ACC	60DE	PDWG	16095	B

Tekla structures

Approval is subject to approval of coordination package between multi-discipline.

REVIEWED WITH COMMENT
MONORAILS PROJECT

MATERIAL LIST FOR ASSEMBLY MK'D Z16-HR031

Mark	Profile	GRADE	No.	Length	Area	Weight
Z16-HR031	CHS48.3*4.0	S235JR	1	4994	0.75	21.84
W756	ROD32	S235JR	1	100	0.01	0.60
				Total	0.76	22.44

BOLT LIST:-

BOLT \ STUD	BOLT DESCRIPTION	QTY	FINISH

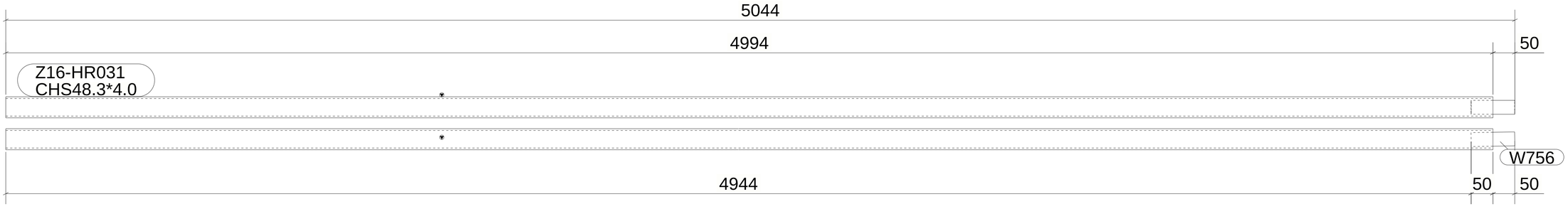

1 *REQUIRED AS DRAWN MARKED* Z16-HR031

GENERAL NOTES:

1. THE DIMENSIONS SHOWN ARE NOMINAL (IN MILLIMETERS), U.N.O.
2. WELD SIZESHALL BE AISC MINIMUM OF 6 mm UNLESS NOTED OTHERWISE.
3. ALL FIELD WELDS SHALL BE INSPECTED PER QUALITY ASSURANCE AND SPECIAL INSPECTIONS.

REFERENCE DRAWINGS

1	93M-BOA-NAT-LOT-04833
2	93M-BOA-NAT-LOT-09170
3	93M-BOA-NAT-LOT-01976
4	93M-BOA-NAT-LOT-20021
5	
6	
7	
8	
9	

6TH OF OCTOBER CITY RAIL TRANSIT MONORAIL

The Authority | Hill International Consultant | Main Contractor | Structural Designer

6 October Monorail
Engineering Unit
Valid For Construction

KEY PLAN:

SCALE: AS SHOWN | SHOP DRAWING | DATE: 08/29/2023

REV	DATE	DSG.	CHK.	APP.	AMENDMENTS	STATUS
B	08/29/2023	M.KH	M.OH	DR.M.M	ISSUED FOR INFORMATION	IFI
A	09/21/2022	M.KH	M.OH	DR.M.M	ISSUED FOR INFORMATION	IFI

DRAWING TITLE
6TH OF OCTOBER MONORAIL
SERVICE WALKWAYS
ZONE(1016)
Z16-HR031

Project Code	Rubric	Initiator	Lot	Ref	Number	Revision
93M	0476	ACC	60DEP	DWG	160960	B

Tekla structures

Approval is subject to approval of coordination package between multi-discipline.

REVIEWED WITH COMMENT
MONORAILS PROJECT

MATERIAL LIST FOR ASSEMBLY MK'D Z16-HR012

Mark	Profile	GRADE	No.	Length	Area	Weight
Z16-HR012	CHS48.3*4.0	S235JR	1	5994	0.90	26.21
W748	ROD32	S235JR	1	100	0.01	0.60
				Total	0.91	26.81

BOLT LIST:-

BOLT \ STUD	BOLT DESCRIPTION	QTY	FINISH

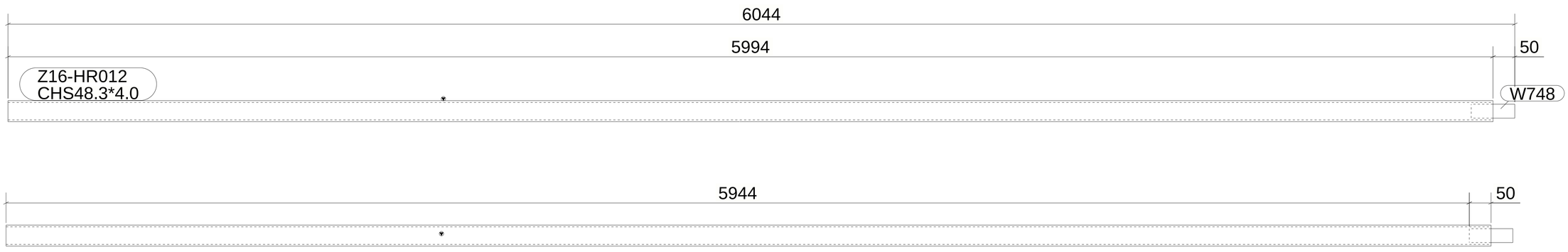

1 *REQUIRED AS DRAWN MARKED* Z16-HR012

6 October Monorail
Engineering Unit
Valid For Construction

GENERAL NOTES:

1. THE DIMENSIONS SHOWN ARE NOMINAL (IN MILLIMETERS), U.N.O.
2. WELD SIZESHALL BE AISC MINIMUM OF 6 mm UNLESS NOTED OTHERWISE.
3. ALL FIELD WELDS SHALL BE INSPECTED PER QUALITY ASSURANCE AND SPECIAL INSPECTIONS.

REFERENCE DRAWINGS

1	93M-BOA-NAT-LOT-04833
2	93M-BOA-NAT-LOT-09170
3	93M-BOA-NAT-LOT-01976
4	93M-BOA-NAT-LOT-20021
5	
6	
7	
8	
9	

6TH OF OCTOBER CITY RAIL TRANSIT MONORAIL

The Authority — Consultant: Hill International — Main Contractor — Structural Designer

KEY PLAN:

REV.	DATE	DSG.	CHK.	APP.	AMENDMENTS	STATUS
B	08/29/2023	M.KH	M.KH	DR.M.M	ISSUED FOR INFORMATION	IFI
A	09/21/2022	M.KH	M.KH	DR.M.M	ISSUED FOR INFORMATION	IFI

SCALE: AS SHOWN | SHOP DRAWING | DATE: 08/29/2023

DRAWING TITLE
6TH OF OCTOBER MONORAIL
SERVICE WALKWAYS
ZONE(1016)
Z16-HR012

Project Code	Rubric	Initiator	Lot	Ref	Number	Revision
93M	047	6ACC	60DEP	DWG	16097	B

Tekla structures

Approval is subject to approval of coordination package between multi-discipline.

REVIEWED WITH COMMENT
MONORAILS PROJECT

MATERIAL LIST FOR ASSEMBLY MK'D Z16-HR001

Mark	Profile	GRADE	No.	Length	Area	Weight
Z16-HR001	CHS48.3*4.0	S235JR	1	3811	0.57	16.66
W119	CHS48.3*4.0	S235JR	1	22	0.00	0.10
W820	CHS48.3*4.0	S235JR	1	330	0.05	1.44
W836	CHS48.3*4.0	S235JR	1	203	0.03	0.89
W845	PL3*45	S355JR	1	45	0.00	0.03
W860	CHS48.3*4.0	S235JR	1	333	0.05	1.46
W871	CHS48.3*4.0	S235JR	1	64	0.01	0.28
W874	CHS48.3*4.0	S235JR	1	75	0.01	0.33
				Total	0.73	21.20

BOLT LIST:-

BOLT \ STUD	BOLT DESCRIPTION	QTY	FINISH

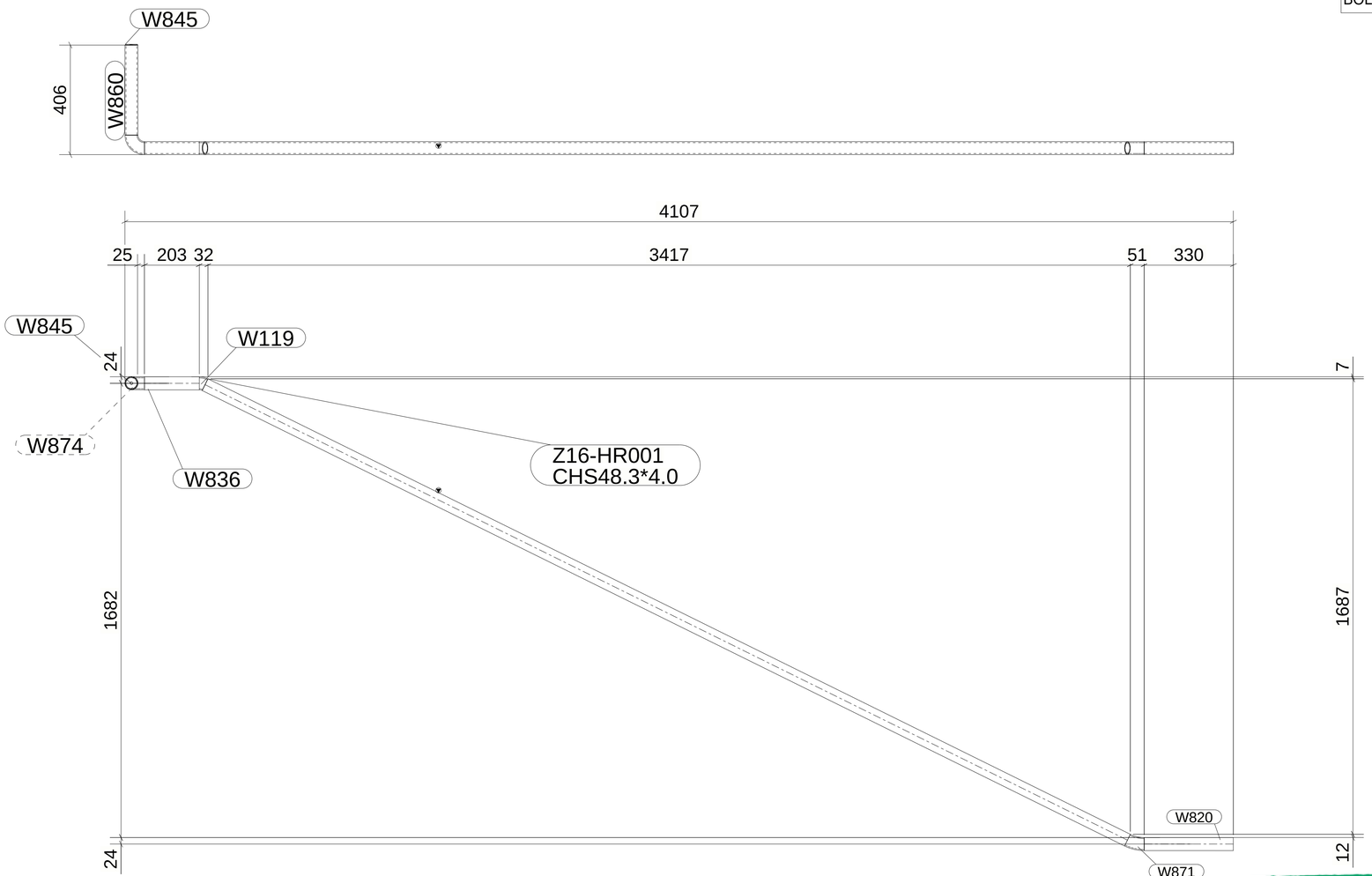

1 *REQUIRED AS DRAWN MARKED* Z16-HR001

6 October Monorail
Engineering Unit
Valid For Construction

GENERAL NOTES:

1. THE DIMENSIONS SHOWN ARE NOMINAL (IN MILLIMETERS), U.N.O.
2. WELD SIZESHALL BE AISC MINIMUM OF 6 mm UNLESS NOTED OTHERWISE.
3. ALL FIELD WELDS SHALL BE INSPECTED PER QUALITY ASSURANCE AND SPECIAL INSPECTIONS.

REFERENCE DRAWINGS

1	93M-BOA-NAT-LOT-04833
2	93M-BOA-NAT-LOT-09170
3	93M-BOA-NAT-LOT-01976
4	93M-BOA-NAT-LOT-20021
5	
6	
7	
8	
9	

6TH OF OCTOBER CITY RAIL TRANSIT MONORAIL

The Authority — Consultant: Hill International — Main Contractor: ORASCOM CONSTRUCTION / BOMBARDIER — Structural Designer: INNOVA TRANSPORTATION

KEY PLAN:

SCALE: AS SHOWN | SHOP DRAWING | DATE: 08/29/2023

REV	DATE	DSG.	CHK.	APP.	AMENDMENTS	STATUS
B	08/29/2023	M.KH	M.KH	DR.M.M	ISSUED FOR INFORMATION	IFI
A	09/21/2022	M.KH	M.KH	DR.M.M	ISSUED FOR INFORMATION	IFI

DRAWING TITLE
6TH OF OCTOBER MONORAIL
SERVICE WALKWAYS
ZONE(1016)
Z16-HR001

Project Code	Rubric	Initiator	Lot	Ref	Number	Revision
93M	047	6ACC	60DE	PDWG	1609	8 B

Tekla structures

Approval is subject to approval of coordination package between multi-discipline.

REVIEWED WITH COMMENT
MONORAILS PROJECT

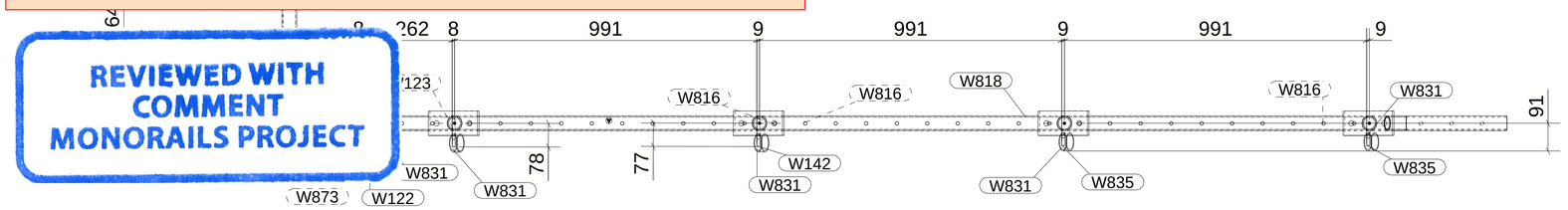

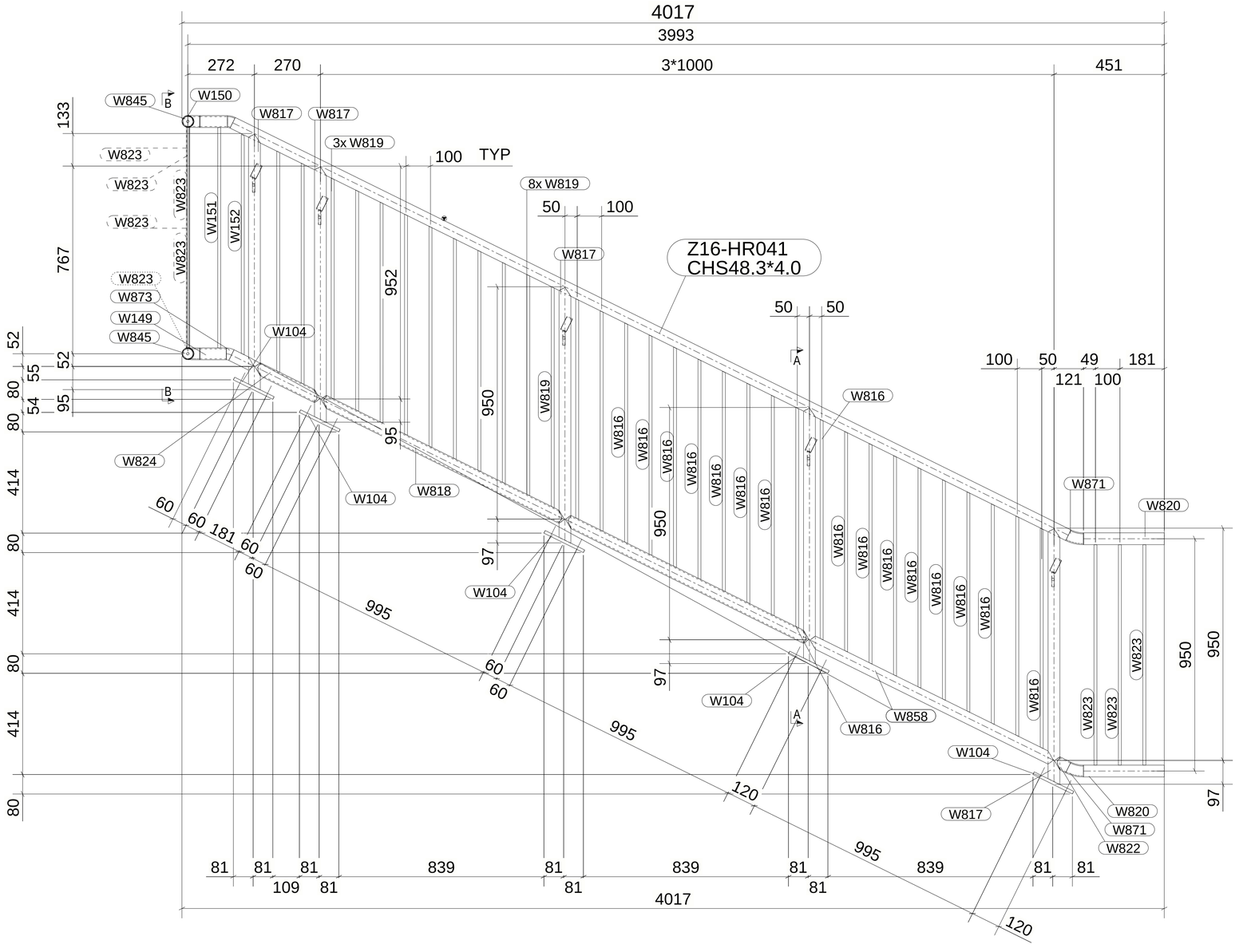
4017
3993
272
270
3*1000
451
W845
B
W150
W817
W817
3x W819
100 TYP
W823
W823
W823
W823
W823
W151
W152
133
767
8x W819
50
100
W817
Z16-HR041
CHS48.3*4.0
952
50
50
A
W873
W149
W845
W104
W816
100
50
49
181
121
100
52
52
55
80
54
95
B
W824
W104
W818
95
950
W819
W816
W816
W816

Approval is subject to approval of coordination package between multi-discipline.

REVIEWED WITH COMMENT
MONORAILS PROJECT

MATERIAL LIST FOR ASSEMBLY MK'D Z16-HR030

Mark	Profile	GRADE	No.	Length	Area	Weight
Z16-HR030	CHS48.3*4.0	S235JR	1	5268	0.79	23.03
W756	ROD32	S235JR	1	100	0.01	0.60
				Total	0.80	23.64

BOLT LIST:-

BOLT \ STUD	BOLT DESCRIPTION	QTY	FINISH

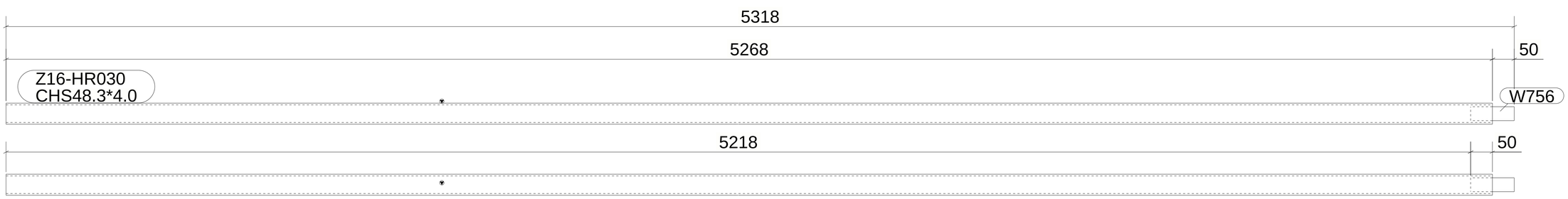

1 *REQUIRED AS DRAWN MARKED* Z16-HR030

GENERAL NOTES:

1. THE DIMENSIONS SHOWN ARE NOMINAL (IN MILLIMETERS), U.N.O.
2. WELD SIZESHALL BE AISC MINIMUM OF 6 mm UNLESS NOTED OTHERWISE.
3. ALL FIELD WELDS SHALL BE INSPECTED PER QUALITY ASSURANCE AND SPECIAL INSPECTIONS.

REFERENCE DRAWINGS

1	93M-BOA-NAT-LOT-04833
2	93M-BOA-NAT-LOT-09170
3	93M-BOA-NAT-LOT-01976
4	93M-BOA-NAT-LOT-20021
5	
6	
7	
8	
9	

6TH OF OCTOBER CITY RAIL TRANSIT MONORAIL

The Authority | Hill International Consultant | Main Contractor | Structural Designer

KEY PLAN:

6 October Monorail
Engineering Unit
Valid For Construction

SCALE	SHOP DRAWING	DATE
AS SHOWN		08/29/2023

REV	DATE	DSG.	CHK.	APP.	AMENDMENTS	STATUS
B	08/29/2023	M.KH	M.KH	DR.M.M	ISSUED FOR INFORMATION	IFI
A	09/21/2022	M.KH	M.KH	DR.M.M	ISSUED FOR INFORMATION	IFI

DRAWING TITLE
6TH OF OCTOBER MONORAIL
SERVICE WALKWAYS
ZONE(1016)
Z16-HR030

Project Code	Rubric	Initiator	Lot	Ref	Number	Revision
9 3	M 0 4 7 6	A C C	6 0 D E P	D W G	1 6 1 0 0	B

Trekla structures

Approval is subject to approval of coordination package between multi-discipline.

REVIEWED WITH COMMENT
MONORAILS PROJECT

MATERIAL LIST FOR ASSEMBLY MK'D Z16-HR033

Mark	Profile	GRADE	No.	Length	Area	Weight
Z16-HR033	CHS48.3*4.0	S235JR	1	2987	0.45	13.06
W756	ROD32	S235JR	1	100	0.01	0.60
				Total	0.46	13.66

BOLT LIST:-

BOLT \ STUD	BOLT DESCRIPTION	QTY	FINISH

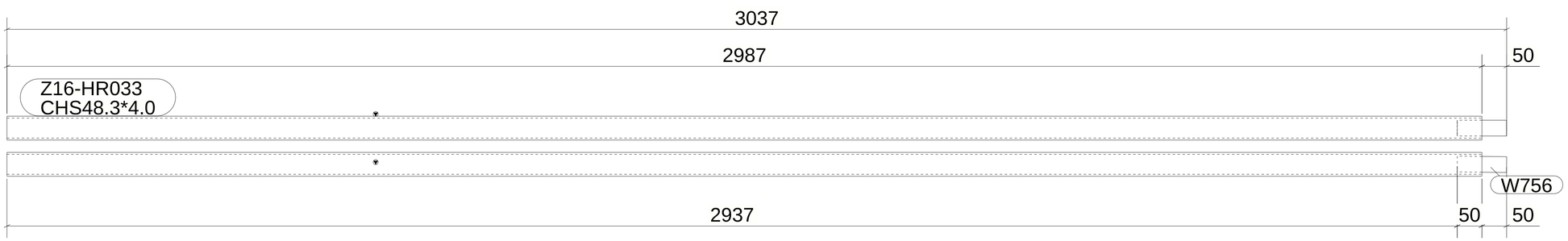

2 *REQUIRED AS DRAWN MARKED* Z16-HR033

6 October Monorail
Engineering Unit
Valid For Construction

GENERAL NOTES:

1. THE DIMENSIONS SHOWN ARE NOMINAL (IN MILLIMETERS), U.N.O.
2. WELD SIZESHALL BE AISC MINIMUM OF 6 mm UNLESS NOTED OTHERWISE.
3. ALL FIELD WELDS SHALL BE INSPECTED PER QUALITY ASSURANCE AND SPECIAL INSPECTIONS.

REFERENCE DRAWINGS

1	93M-BOA-NAT-LOT-04833
2	93M-BOA-NAT-LOT-09170
3	93M-BOA-NAT-LOT-01976
4	93M-BOA-NAT-LOT-20021
5	
6	
7	
8	
9	

6TH OF OCTOBER CITY RAIL TRANSIT MONORAIL

The Authority — Consultant — Main Contractor — Structural Designer

KEY PLAN:

SCALE: AS SHOWN | SHOP DRAWING | DATE: 08/29/2023

REV	DATE	DSG.	CHK.	APP.	AMENDMENTS	STATUS
B	08/29/2023	M.KH	M.KH	DR.M.M	ISSUED FOR INFORMATION	IFI
A	09/21/2022	M.KH	M.KH	DR.M.M	ISSUED FOR INFORMATION	IFI

DRAWING TITLE
6TH OF OCTOBER MONORAIL
SERVICE WALKWAYS
ZONE(1016)
Z16-HR033

Project Code	Rubric	Initiator	Lot	Ref	Number	Revision
93	M047	6ACC	60DE	PDWG	1610	1 B

Tekla structures

Approval is subject to approval of coordination package between multi-discipline.

REVIEWED WITH COMMENT MONORAILS PROJECT

MATERIAL LIST FOR ASSEMBLY MK'D Z16-HR003

Mark	Profile	GRADE	No.	Length	Area	Weight
Z16-HR003	CHS48.3*4.0	S235JR	1	1926	0.29	8.42
W756	ROD32	S235JR	1	100	0.01	0.60
W828	CHS48.3*4.0	S235JR	1	301	0.05	1.32
W845	PL3*45	S355JR	1	45	0.00	0.03
W871	CHS48.3*4.0	S235JR	1	64	0.01	0.28
				Total	0.36	10.66

BOLT LIST:-

BOLT \ STUD	BOLT DESCRIPTION	QTY	FINISH

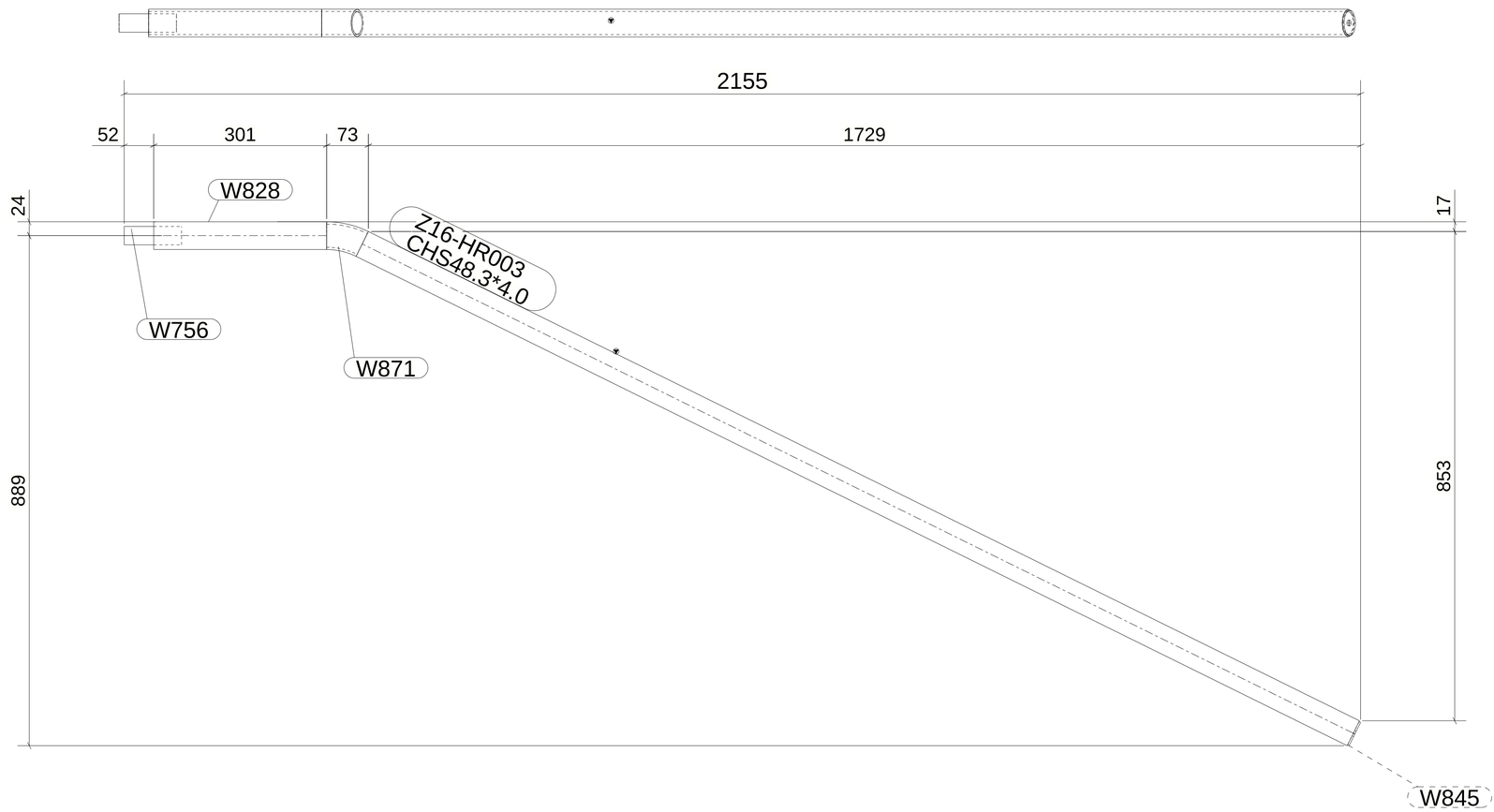

1 *REQUIRED AS DRAWN MARKED* Z16-HR003

6 October Monorail Engineering Unit
Valid For Construction

GENERAL NOTES:

1. THE DIMENSIONS SHOWN ARE NOMINAL (IN MILLIMETERS), U.N.O.
2. WELD SIZESHALL BE AISC MINIMUM OF 6 mm UNLESS NOTED OTHERWISE.
3. ALL FIELD WELDS SHALL BE INSPECTED PER QUALITY ASSURANCE AND SPECIAL INSPECTIONS.

REFERENCE DRAWINGS

1	93M-BOA-NAT-LOT-04833
2	93M-BOA-NAT-LOT-09170
3	93M-BOA-NAT-LOT-01976
4	93M-BOA-NAT-LOT-20021
5	
6	
7	
8	
9	

6TH OF OCTOBER CITY RAIL TRANSIT MONORAIL

The Authority | Hill International Consultant | Main Contractor | Structural Designer

KEY PLAN:

SCALE	SHOPDRAWING	DATE
AS SHOWN		08/29/2023

REV	DATE	DSG.	CHK.	APP.	AMENDMENTS	STATUS
B	08/29/2023	M.KH	M.KH	DR.M.M	ISSUED FOR INFORMATION	IFI
A	09/21/2022	M.KH	M.KH	DR.M.M	ISSUED FOR INFORMATION	IFI

DRAWING TITLE
6TH OF OCTOBER MONORAIL SERVICE WALKWAYS ZONE(1016)
Z16-HR003

Project Code	Rubric	Initiator	Lot	Ref	Number	Revision
93M	0476	ACC	60DEP	DWG	16102	B

Tekla structures

Approval is subject to approval of coordination package between multi-discipline.

REVIEWED WITH COMMENT
MONORAILS PROJECT

MATERIAL LIST FOR ASSEMBLY MK'D Z16-HR009

Mark	Profile	GRADE	No.	Length	Area	Weight
Z16-HR009	CHS48.3*4.0	S235JR	1	3001	0.45	13.12
				Total	0.45	13.12

BOLT LIST:-

BOLT \ STUD	BOLT DESCRIPTION	QTY	FINISH

Z16-HR009
CHS48.3*4.0

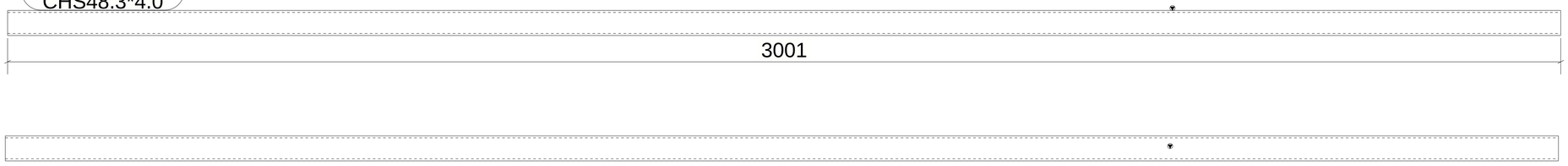

1 *REQUIRED AS DRAWN MARKED* Z16-HR009

6 October Monorail
Engineering Unit
Valid For Construction

GENERAL NOTES:

1. THE DIMENSIONS SHOWN ARE NOMINAL (IN MILLIMETERS), U.N.O.
2. WELD SIZESHALL BE AISC MINIMUM OF 6 mm UNLESS NOTED OTHERWISE.
3. ALL FIELD WELDS SHALL BE INSPECTED PER QUALITY ASSURANCE AND SPECIAL INSPECTIONS.

REFERENCE DRAWINGS

1	93M-BOA-NAT-LOT-04833
2	93M-BOA-NAT-LOT-09170
3	93M-BOA-NAT-LOT-01976
4	93M-BOA-NAT-LOT-20021
5	
6	
7	
8	
9	

6TH OF OCTOBER CITY RAIL TRANSIT MONORAIL

The Authority — Consultant — Main Contractor — Structural Designer

KEY PLAN:

SCALE: AS SHOWN | SHOP DRAWING | DATE: 08/29/2023

REV	DATE	DSG.	CHK.	APP.	AMENDMENTS	STATUS
B	08/29/2023	M.KH	M.KH	DR.M.M	ISSUED FOR INFORMATION	IFI
A	09/21/2022	M.KH	M.KH	DR.M.M	ISSUED FOR INFORMATION	IFI

DRAWING TITLE
6TH OF OCTOBER MONORAIL
SERVICE WALKWAYS
ZONE(1016)
Z16-HR009

Project Code	Rubric	Initiator	Lot	Ref	Number	Revision
9 3 M	0 4 7 6	A C C	6 0 D E P	D W G	1 6 1 0 3	B

Tekla structures

Approval is subject to approval of coordination package between multi-discipline.

REVIEWED WITH COMMENT
MONORAILS PROJECT

MATERIAL LIST FOR ASSEMBLY MK'D Z16-HR008						
Mark	Profile	GRADE	No.	Length	Area	Weight
Z16-HR008	CHS48.3*4.0	S235JR	1	2378	0.36	10.40
				Total	0.36	10.40

BOLT LIST:-

BOLT \ STUD	BOLT DESCRIPTION	QTY	FINISH

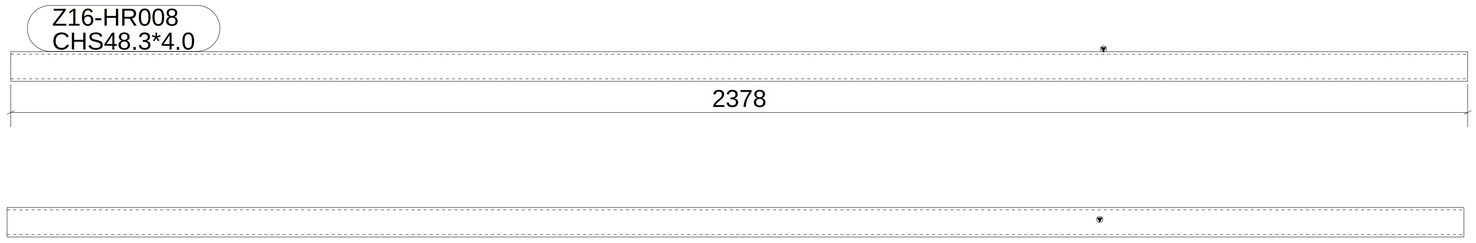

1 *REQUIRED AS DRAWN MARKED* Z16-HR008

6 October Monorail
Engineering Unit
Valid For Construction

GENERAL NOTES:

1. THE DIMENSIONS SHOWN ARE NOMINAL (IN MILLIMETERS), U.N.O.
2. WELD SIZESHALL BE AISC MINIMUM OF 6 mm UNLESS NOTED OTHERWISE.
3. ALL FIELD WELDS SHALL BE INSPECTED PER QUALITY ASSURANCE AND SPECIAL INSPECTIONS.

REFERENCE DRAWINGS

1	93M-BOA-NAT-LOT-04833
2	93M-BOA-NAT-LOT-09170
3	93M-BOA-NAT-LOT-01976
4	93M-BOA-NAT-LOT-20021
5	
6	
7	
8	
9	

6TH OF OCTOBER CITY RAIL TRANSIT MONORAIL

The Authority — Consultant — Main Contractor — Structural Designer

KEY PLAN:

SCALE: AS SHOWN | SHOP DRAWING | DATE: 08/29/2023

REV	DATE	DSG.	CHK.	APP.	AMENDMENTS	STATUS
B	08/29/2023	M.KH	M.KH	DR.M.M	ISSUED FOR INFORMATION	IFI
A	09/21/2022	M.KH	M.KH	DR.M.M	ISSUED FOR INFORMATION	IFI

DRAWING TITLE
6TH OF OCTOBER MONORAIL
SERVICE WALKWAYS
ZONE(1016)
Z16-HR008

Project Code	Rubric	Initiator	Lot	Ref	Number	Revision
93M	047	6ACC	60DE	PDWG	16104	B

Tekla structures

Approval is subject to approval of coordination package between multi-discipline.

REVIEWED WITH COMMENT
MONORAILS PROJECT

MATERIAL LIST FOR ASSEMBLY MK'D Z16-HR036

Mark	Profile	GRADE	No.	Length	Area	Weight
Z16-HR036	CHS48.3*4.0	S235JR	1	1477	0.22	6.46
				Total	0.22	6.46

BOLT LIST:-

BOLT \ STUD	BOLT DESCRIPTION	QTY	FINISH

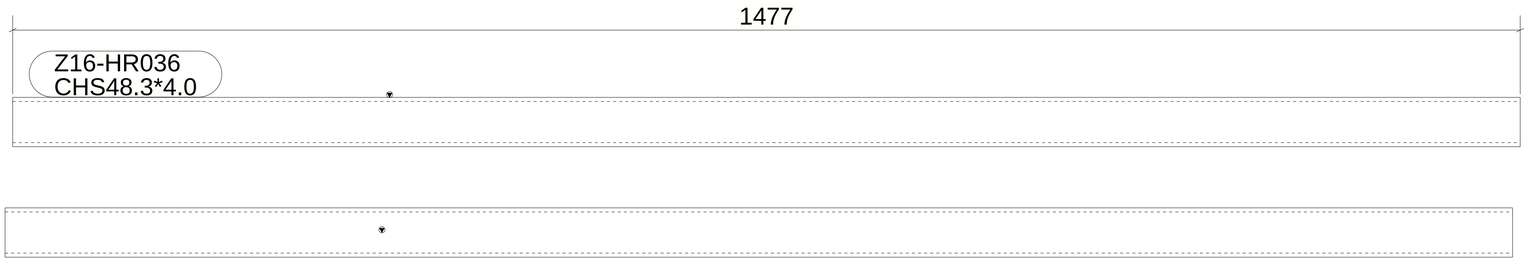

2 *REQUIRED AS DRAWN MARKED* Z16-HR036

6 October: Monorail
Engineering Unit
Valid For Construction

GENERAL NOTES:

1. THE DIMENSIONS SHOWN ARE NOMINAL (IN MILLIMETERS), U.N.O.
2. WELD SIZESHALL BE AISC MINIMUM OF 6 mm UNLESS NOTED OTHERWISE.
3. ALL FIELD WELDS SHALL BE INSPECTED PER QUALITY ASSURANCE AND SPECIAL INSPECTIONS.

REFERENCE DRAWINGS

1	93M-BOA-NAT-LOT-04833
2	93M-BOA-NAT-LOT-09170
3	93M-BOA-NAT-LOT-01976
4	93M-BOA-NAT-LOT-20021
5	
6	
7	
8	
9	

6TH OF OCTOBER CITY RAIL TRANSIT MONORAIL

The Authority — Hill International (Consultant) — Main Contractor — Structural Designer

KEY PLAN:

SCALE: AS SHOWN | SHOP DRAWING | DATE: 08/29/2023

REV	DATE	DSG.	CHK.	APP.	AMENDMENTS	STATUS
B	08/29/2023	M.KH	M.KH	DR.M.M	ISSUED FOR INFORMATION	IFI
A	09/21/2022	M.KH	M.KH	DR.M.M	ISSUED FOR INFORMATION	IFI

DRAWING TITLE
6TH OF OCTOBER MONORAIL
SERVICE WALKWAYS
ZONE(1016)
Z16-HR036

Project Code	Rubric	Initiator	Lot	Ref	Number	Revision
93M	047	6ACC	60DE	PDWG	16105	B

Tekla structures

Approval is subject to approval of coordination package between multi-discipline.

REVIEWED WITH COMMENT
MONORAILS PROJECT

MATERIAL LIST FOR ASSEMBLY MK'D Z16-HR022

Mark	Profile	GRADE	No.	Length	Area	Weight
Z16-HR022	CHS48.3*4.0	S235JR	1	2970	0.45	12.99
W756	ROD32	S235JR	2	100	0.01	0.60
				Total	0.47	14.19

BOLT LIST:-

BOLT \ STUD	BOLT DESCRIPTION	QTY	FINISH

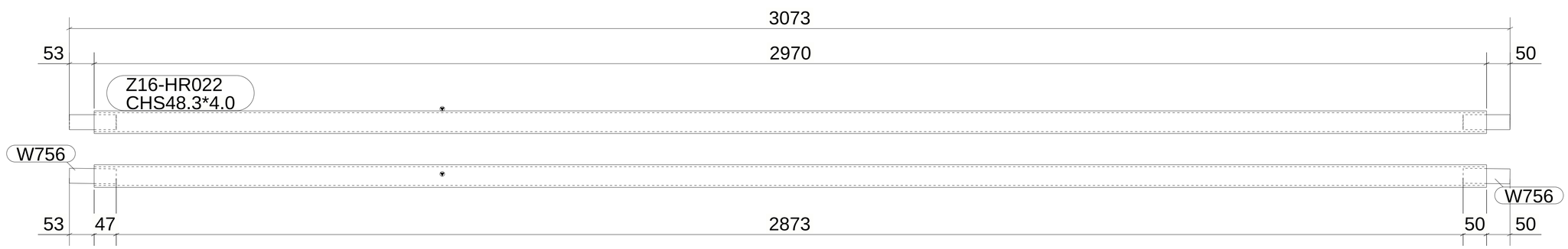

1 *REQUIRED AS DRAWN MARKED* Z16-HR022

6 October Monorail
Engineering Unit
Valid For Construction

GENERAL NOTES:

1. THE DIMENSIONS SHOWN ARE NOMINAL (IN MILLIMETERS), U.N.O.
2. WELD SIZESHALL BE AISC MINIMUM OF 6 mm UNLESS NOTED OTHERWISE.
3. ALL FIELD WELDS SHALL BE INSPECTED PER QUALITY ASSURANCE AND SPECIAL INSPECTIONS.

REFERENCE DRAWINGS

1	93M-BOA-NAT-LOT-04833
2	93M-BOA-NAT-LOT-09170
3	93M-BOA-NAT-LOT-01976
4	93M-BOA-NAT-LOT-20021
5	
6	
7	
8	
9	

6TH OF OCTOBER CITY RAIL TRANSIT MONORAIL

The Authority — Consultant — Main Contractor — Structural Designer

KEY PLAN:

SCALE: AS SHOWN | SHOP DRAWING | DATE: 08/29/2023

REV	DATE	DSG.	CHK.	APP.	AMENDMENTS	STATUS
B	08/29/2023	M.KH	M.KH	DR.M.M	ISSUED FOR INFORMATION	IFI
A	09/21/2022	M.KH	M.KH	DR.M.M	ISSUED FOR INFORMATION	IFI

DRAWING TITLE
6TH OF OCTOBER MONORAIL
SERVICE WALKWAYS
ZONE(1016)
Z16-HR022

Project Code	Rubric	Initiator	Lot	Ref	Number	Revision
9 3	M 0 4 7 6	A C C	6 0 D E P	D W G	1 6 1 0 6	B

Tekla structures

Approval is subject to approval of coordination package between multi-discipline.

REVIEWED WITH COMMENT
MONORAILS PROJECT

MATERIAL LIST FOR ASSEMBLY MK'D Z16-HR017

Mark	Profile	GRADE	No.	Length	Area	Weight
Z16-HR017	CHS48.3*4.0	S235JR	1	2496	0.37	10.91
W748	ROD32	S235JR	1	100	0.01	0.60
				Total	0.39	11.51

BOLT LIST:-

BOLT \ STUD	BOLT DESCRIPTION	QTY	FINISH

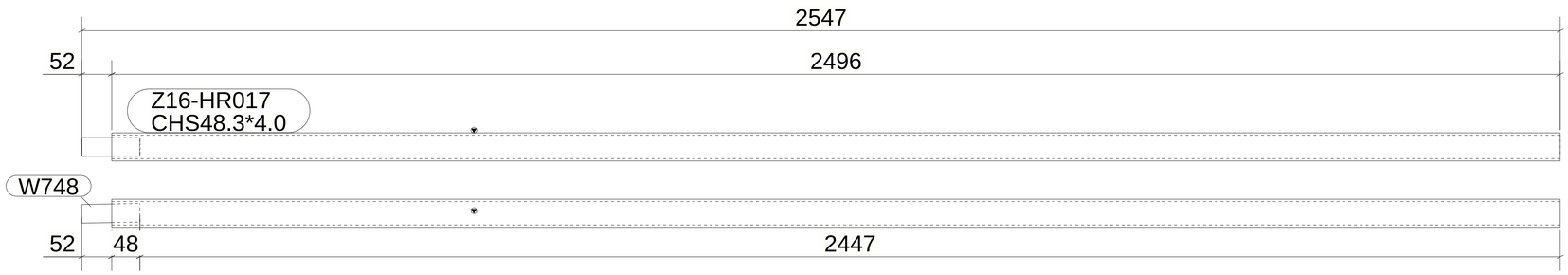

1 *REQUIRED AS DRAWN MARKED* Z16-HR017

6 October Monorail
Engineering Unit
Valid For Construction

GENERAL NOTES:

1. THE DIMENSIONS SHOWN ARE NOMINAL (IN MILLIMETERS), U.N.O.
2. WELD SIZESHALL BE AISC MINIMUM OF 6 mm UNLESS NOTED OTHERWISE.
3. ALL FIELD WELDS SHALL BE INSPECTED PER QUALITY ASSURANCE AND SPECIAL INSPECTIONS.

REFERENCE DRAWINGS

1	93M-BOA-NAT-LOT-04833
2	93M-BOA-NAT-LOT-09170
3	93M-BOA-NAT-LOT-01976
4	93M-BOA-NAT-LOT-20021
5	
6	
7	
8	
9	

6TH OF OCTOBER CITY RAIL TRANSIT MONORAIL

The Authority — Hill International Consultant — Main Contractor — Structural Designer

KEY PLAN:

SCALE: AS SHOWN | SHOP DRAWING | DATE: 08/29/2023

REV	DATE	DSG.	CHK.	APP.	AMENDMENTS	STATUS
B	08/29/2023	M.KH	M.KH	DR.M.M	ISSUED FOR INFORMATION	IFI
A	09/21/2022	M.KH	M.KH	DR.M.M	ISSUED FOR INFORMATION	IFI

DRAWING TITLE
6TH OF OCTOBER MONORAIL
SERVICE WALKWAYS
ZONE(1016)
Z16-HR017

Project Code	Rubric	Initiator	Lot	Ref	Number	Revision
93M	0476	ACC	60DEP	DWG	16107	B

Tekla structures

Approval is subject to approval of coordination package between multi-discipline.

REVIEWED WITH COMMENT
MONORAILS PROJECT

MATERIAL LIST FOR ASSEMBLY MK'D Z16-HR021

Mark	Profile	GRADE	No.	Length	Area	Weight
Z16-HR021	CHS48.3*4.0	S235JR	1	3021	0.45	13.21
W756	ROD32	S235JR	2	100	0.01	0.60
				Total	0.48	14.42

BOLT LIST:-

BOLT \ STUD	BOLT DESCRIPTION	QTY	FINISH

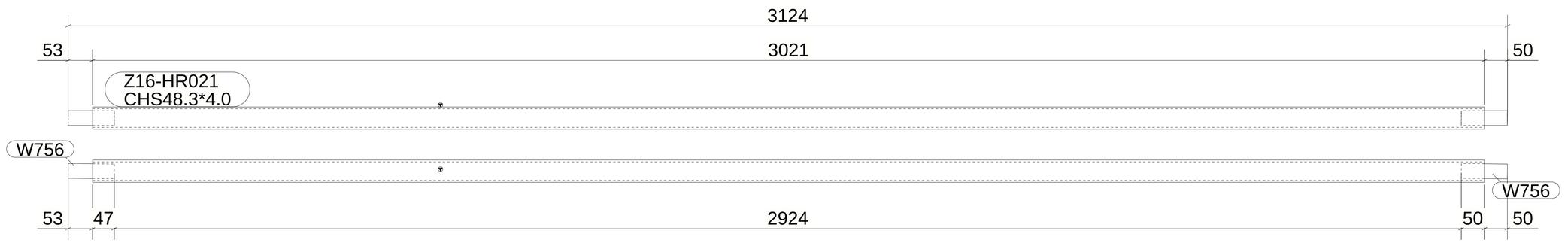

1 *REQUIRED AS DRAWN MARKED* Z16-HR021

GENERAL NOTES:

1. THE DIMENSIONS SHOWN ARE NOMINAL (IN MILLIMETERS), U.N.O.
2. WELD SIZESHALL BE AISC MINIMUM OF 6 mm UNLESS NOTED OTHERWISE.
3. ALL FIELD WELDS SHALL BE INSPECTED PER QUALITY ASSURANCE AND SPECIAL INSPECTIONS.

REFERENCE DRAWINGS

1	93M-BOA-NAT-LOT-04833
2	93M-BOA-NAT-LOT-09170
3	93M-BOA-NAT-LOT-01976
4	93M-BOA-NAT-LOT-20021
5	
6	
7	
8	
9	

6TH OF OCTOBER CITY RAIL TRANSIT MONORAIL

The Authority — Hill International Consultant — Main Contractor — Structural Designer

6 October Monorail
Engineering Unit
Valid For Construction

KEY PLAN:

SCALE: AS SHOWN | SHOP DRAWING | DATE: 08/29/2023

REV	DATE	DSG.	CHK.	APP.	AMENDMENTS	STATUS
B	08/29/2023	M.KH	M.KH	DR.M.M	ISSUED FOR INFORMATION	IFI
A	09/21/2022	M.KH	M.KH	DR.M.M	ISSUED FOR INFORMATION	IFI

DRAWING TITLE
6TH OF OCTOBER MONORAIL
SERVICE WALKWAYS
ZONE(1016)
Z16-HR021

Project Code	Rubric	Initiator	Lot	Ref	Number	Revision
93	M047	6ACC	60DE	PDWG	1610	8 B

Tekla structures

Approval is subject to approval of coordination package between multi-discipline.

REVIEWED WITH COMMENT
MONORAILS PROJECT

MATERIAL LIST FOR ASSEMBLY MK'D Z16-HR040

Mark	Profile	GRADE	No.	Length	Area	Weight
Z16-HR040	CHS48.3*4.0	S235JR	1	2979	0.45	13.03
				Total	0.45	13.03

BOLT LIST:-

BOLT \ STUD	BOLT DESCRIPTION	QTY	FINISH

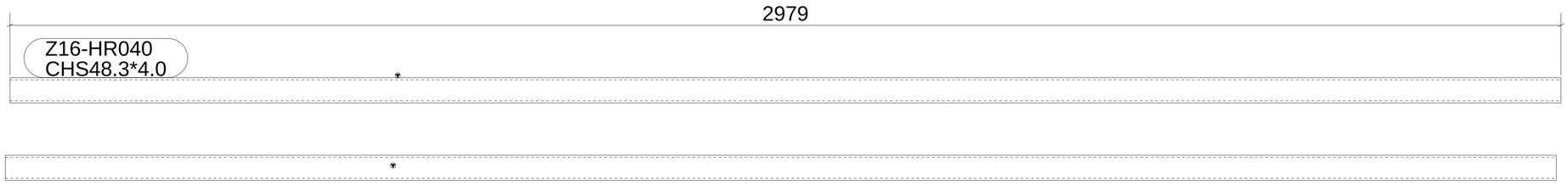

1 *REQUIRED AS DRAWN MARKED* Z16-HR040

6 October Monorail
Engineering Unit
Valid For Construction

GENERAL NOTES:

1. THE DIMENSIONS SHOWN ARE NOMINAL (IN MILLIMETERS), U.N.O.
2. WELD SIZESHALL BE AISC MINIMUM OF 6 mm UNLESS NOTED OTHERWISE.
3. ALL FIELD WELDS SHALL BE INSPECTED PER QUALITY ASSURANCE AND SPECIAL INSPECTIONS.

REFERENCE DRAWINGS

1	93M-BOA-NAT-LOT-04833
2	93M-BOA-NAT-LOT-09170
3	93M-BOA-NAT-LOT-01976
4	93M-BOA-NAT-LOT-20021
5	
6	
7	
8	
9	

6TH OF OCTOBER CITY RAIL TRANSIT MONORAIL

The Authority — Consultant — Main Contractor — Structural Designer

KEY PLAN:

SCALE: AS SHOWN | SHOP DRAWING | DATE: 08/29/2023

REV	DATE	DSG.	CHK.	APP.	AMENDMENTS	STATUS
B	08/29/2023	M.KH	M.KH	DR.M.M	ISSUED FOR INFORMATION	IFI
A	09/21/2022	M.KH	M.KH	DR.M.M	ISSUED FOR INFORMATION	IFI

DRAWING TITLE
6TH OF OCTOBER MONORAIL
SERVICE WALKWAYS
ZONE(1016)
Z16-HR040

Project Code	Rubric	Initiator	Lot	Ref	Number	Revision
93M	047	6ACC	60DE	PDWG	16109	B

Tekla structures

Approval is subject to approval of coordination package between multi-discipline.

REVIEWED WITH COMMENT
MONORAILS PROJECT

MATERIAL LIST FOR ASSEMBLY MK'D Z16-HR034

Mark	Profile	GRADE	No.	Length	Area	Weight
Z16-HR034	CHS48.3*4.0	S235JR	1	1296	0.19	5.67
W756	ROD32	S235JR	1	100	0.01	0.60
W845	PL3*45	S355JR	1	45	0.00	0.03
				Total	0.21	6.31

BOLT LIST:-

BOLT \ STUD	BOLT DESCRIPTION	QTY	FINISH

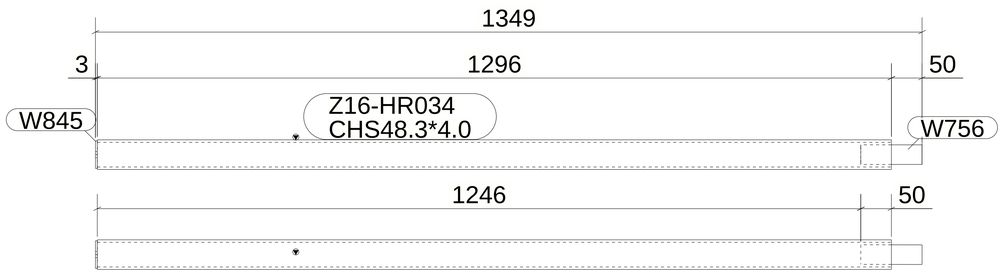

1 *REQUIRED AS DRAWN MARKED* Z16-HR034

6 October Monorail
Engineering Unit
Valid For Construction

GENERAL NOTES:

1. THE DIMENSIONS SHOWN ARE NOMINAL (IN MILLIMETERS), U.N.O.
2. WELD SIZESHALL BE AISC MINIMUM OF 6 mm UNLESS NOTED OTHERWISE.
3. ALL FIELD WELDS SHALL BE INSPECTED PER QUALITY ASSURANCE AND SPECIAL INSPECTIONS.

REFERENCE DRAWINGS

1	93M-BOA-NAT-LOT-04833
2	93M-BOA-NAT-LOT-09170
3	93M-BOA-NAT-LOT-01976
4	93M-BOA-NAT-LOT-20021
5	
6	
7	
8	
9	

6TH OF OCTOBER CITY RAIL TRANSIT MONORAIL

The Authority | Consultant: Hill International | Main Contractor: ORASCOM CONSTRUCTION, BOMBARDIER | Structural Designer: INNOVA TRANSPORTATION

KEY PLAN:

SCALE: AS SHOWN | SHOP DRAWING | DATE: 08/29/2023

REV	DATE	DSG.	CHK.	APP.	AMENDMENTS	STATUS
B	08/29/2023	M.KH	M.KH	DR.M.M	ISSUED FOR INFORMATION	IFI
A	09/21/2022	M.KH	M.KH	DR.M.M	ISSUED FOR INFORMATION	IFI

DRAWING TITLE
6TH OF OCTOBER MONORAIL
SERVICE WALKWAYS
ZONE(1016)
Z16-HR034

Project Code	Rubric	Initiator	Lot	Ref	Number	Revision
93M047	ACC60	DEP	DWG	16110		B

Tekla structures

Approval is subject to approval of coordination package between multi-discipline.

REVIEWED WITH COMMENT
MONORAILS PROJECT

MATERIAL LIST FOR ASSEMBLY MK'D Z16-HR013

Mark	Profile	GRADE	No.	Length	Area	Weight
Z16-HR013	CHS48.3*4.0	S235JR	1	5998	0.90	26.23
W748	ROD32	S235JR	1	100	0.01	0.60
				Total	0.91	26.83

BOLT LIST:-

BOLT \ STUD	BOLT DESCRIPTION	QTY	FINISH

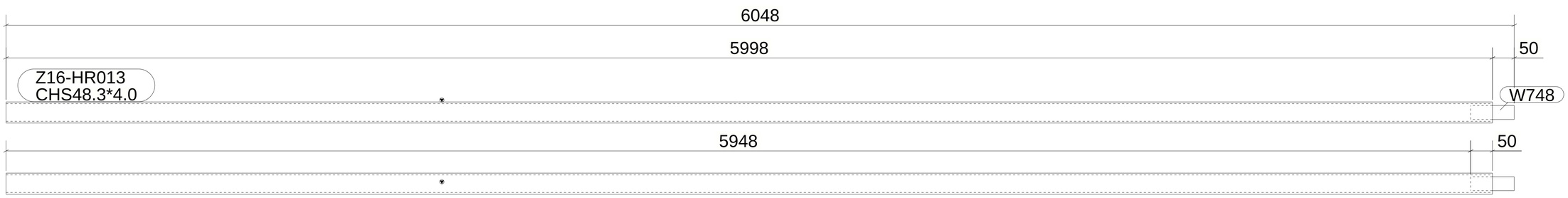

2 *REQUIRED AS DRAWN MARKED* Z16-HR013

6 October Monorail
Engineering Unit
Valid For Construction

GENERAL NOTES:

1. THE DIMENSIONS SHOWN ARE NOMINAL (IN MILLIMETERS), U.N.O.
2. WELD SIZESHALL BE AISC MINIMUM OF 6 mm UNLESS NOTED OTHERWISE.
3. ALL FIELD WELDS SHALL BE INSPECTED PER QUALITY ASSURANCE AND SPECIAL INSPECTIONS.

REFERENCE DRAWINGS

1	93M-BOA-NAT-LOT-04833
2	93M-BOA-NAT-LOT-09170
3	93M-BOA-NAT-LOT-01976
4	93M-BOA-NAT-LOT-20021
5	
6	
7	
8	
9	

6TH OF OCTOBER CITY RAIL TRANSIT MONORAIL

The Authority | Hill International Consultant | Main Contractor | Structural Designer

KEY PLAN:

SCALE: AS SHOWN | SHOP DRAWING | DATE: 08/29/2023

REV	DATE	DSG.	CHK.	APP.	AMENDMENTS	STATUS
B	08/29/2023	M.KH	M.KH	DR.M.M	ISSUED FOR INFORMATION	IFI
A	09/21/2022	M.KH	M.KH	DR.M.M	ISSUED FOR INFORMATION	IFI

DRAWING TITLE
6TH OF OCTOBER MONORAIL
SERVICE WALKWAYS
ZONE(1016)
Z16-HR013

Project Code	Rubric	Initiator	Lot	Ref	Number	Revision
93	M047	6ACC	60DE	PDWG	1611	1 B

Tekla structures

Approval is subject to approval of coordination package between multi-discipline.

REVIEWED WITH COMMENT
MONORAILS PROJECT

MATERIAL LIST FOR ASSEMBLY MK'D Z16-HR024

Mark	Profile	GRADE	No.	Length	Area	Weight
Z16-HR024	CHS48.3*4.0	S235JR	1	2391	0.36	10.46
W756	ROD32	S235JR	1	100	0.01	0.60
				Total	0.37	11.06

BOLT LIST:-

BOLT \ STUD	BOLT DESCRIPTION	QTY	FINISH

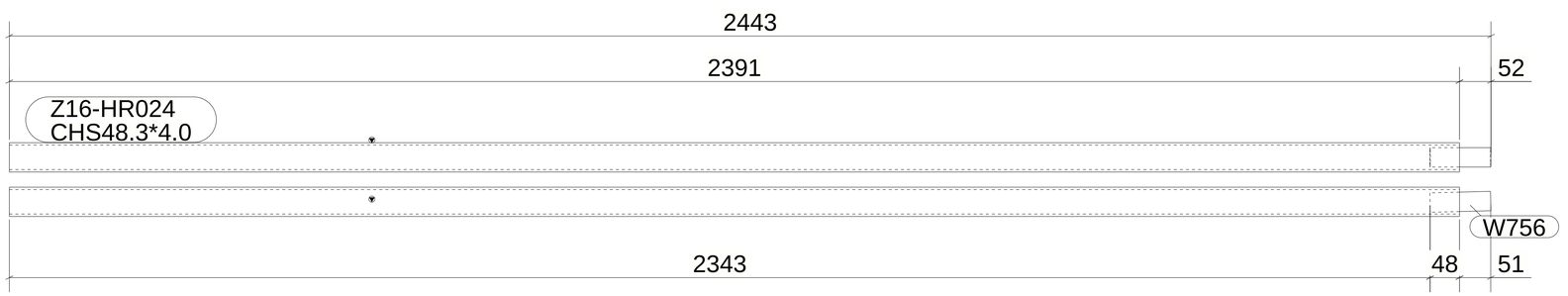

1 *REQUIRED AS DRAWN MARKED* Z16-HR024

6 October Monorail
Engineering Unit
Valid For Construction

GENERAL NOTES:

1. THE DIMENSIONS SHOWN ARE NOMINAL (IN MILLIMETERS), U.N.O.
2. WELD SIZESHALL BE AISC MINIMUM OF 6 mm UNLESS NOTED OTHERWISE.
3. ALL FIELD WELDS SHALL BE INSPECTED PER QUALITY ASSURANCE AND SPECIAL INSPECTIONS.

REFERENCE DRAWINGS

1	93M-BOA-NAT-LOT-04833
2	93M-BOA-NAT-LOT-09170
3	93M-BOA-NAT-LOT-01976
4	93M-BOA-NAT-LOT-20021
5	
6	
7	
8	
9	

6TH OF OCTOBER CITY RAIL TRANSIT MONORAIL

The Authority | Hill International Consultant | ORASCOM BOMBARDIER Main Contractor | INNOVA TRANSPORTATION Structural Designer

KEY PLAN:

SCALE: AS SHOWN | SHOP DRAWING | DATE: 08/29/2023

REV	DATE	DSG.	CHK.	APP.	AMENDMENTS	STATUS
B	08/29/2023	M.KH	M.KH	DR.M.M	ISSUED FOR INFORMATION	IFI
A	09/21/2022	M.KH	M.KH	DR.M.M	ISSUED FOR INFORMATION	IFI

DRAWING TITLE
6TH OF OCTOBER MONORAIL
SERVICE WALKWAYS
ZONE(1016)
Z16-HR024

Project Code	Rubric	Initiator	Lot	Ref	Number	Revision
9 3 M	0 4 7 6	A C C	6 0 D E P	D W G	1 6 1 1 2	B

Tekla structures

Approval is subject to approval of coordination package between multi-discipline.

REVIEWED WITH COMMENT
MONORAILS PROJECT

MATERIAL LIST FOR ASSEMBLY MK'D Z16-HR016

Mark	Profile	GRADE	No.	Length	Area	Weight
Z16-HR016	CHS48.3*4.0	S235JR	1	2982	0.45	13.04
W748	ROD32	S235JR	1	100	0.01	0.60
				Total	0.46	13.64

BOLT LIST:-

BOLT \ STUD	BOLT DESCRIPTION	QTY	FINISH

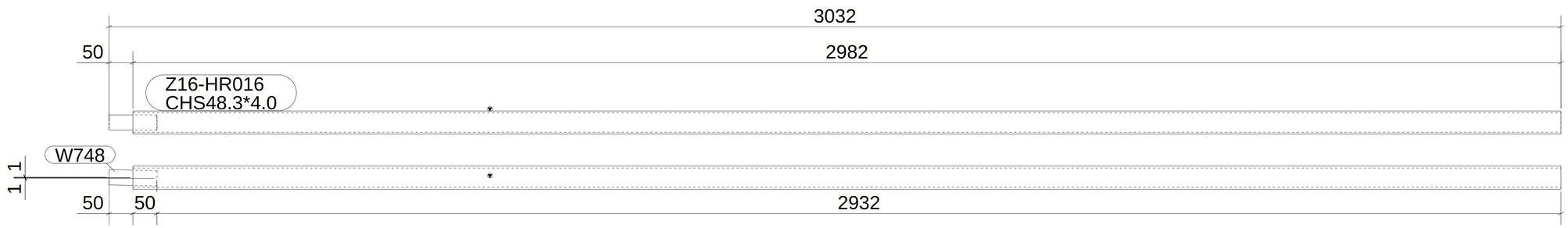

1 *REQUIRED AS DRAWN MARKED* Z16-HR016

GENERAL NOTES:

1. THE DIMENSIONS SHOWN ARE NOMINAL (IN MILLIMETERS), U.N.O.
2. WELD SIZESHALL BE AISC MINIMUM OF 6 mm UNLESS NOTED OTHERWISE.
3. ALL FIELD WELDS SHALL BE INSPECTED PER QUALITY ASSURANCE AND SPECIAL INSPECTIONS.

REFERENCE DRAWINGS

1	93M-BOA-NAT-LOT-04833
2	93M-BOA-NAT-LOT-09170
3	93M-BOA-NAT-LOT-01976
4	93M-BOA-NAT-LOT-20021
5	
6	
7	
8	
9	

6TH OF OCTOBER CITY RAIL TRANSIT MONORAIL

The Authority | Hill International Consultant | ORASCOM / BOMBARDIER Main Contractor | INNOVA TRANSPORTATION Structural Designer

6 October Monorail
Engineering Unit
Valid For Construction

KEY PLAN:

SCALE: AS SHOWN | SHOP DRAWING | DATE: 08/29/2023

REV	DATE	DSG.	CHK.	APP.	AMENDMENTS	STATUS
B	08/29/2023	M.KH	M.KH	DR.M.M	ISSUED FOR INFORMATION	IFI
A	09/21/2022	M.KH	M.KH	DR.M.M	ISSUED FOR INFORMATION	IFI

DRAWING TITLE
6TH OF OCTOBER MONORAIL
SERVICE WALKWAYS
ZONE(1016)
Z16-HR016

Project Code	Rubric	Initiator	Lot	Ref	Number	Revision
9 3	M 0 4 7 6	A C C	6 0	D E P	D W G	1 6 1 1 3	B

Tekla structures

Approval is subject to approval of coordination package between multi-discipline.

REVIEWED WITH COMMENT
MONORAILS PROJECT

MATERIAL LIST FOR ASSEMBLY MK'D Z16-HR035

Mark	Profile	GRADE	No.	Length	Area	Weight
Z16-HR035	CHS48.3*4.0	S235JR	1	2644	0.40	11.56
				Total	0.40	11.56

BOLT LIST:-

BOLT \ STUD	BOLT DESCRIPTION	QTY	FINISH

1 *REQUIRED AS DRAWN MARKED* Z16-HR035

6 October Monorail
Engineering Unit
Valid For Construction

GENERAL NOTES:

1. THE DIMENSIONS SHOWN ARE NOMINAL (IN MILLIMETERS), U.N.O.
2. WELD SIZESHALL BE AISC MINIMUM OF 6 mm UNLESS NOTED OTHERWISE.
3. ALL FIELD WELDS SHALL BE INSPECTED PER QUALITY ASSURANCE AND SPECIAL INSPECTIONS.

REFERENCE DRAWINGS

1	93M-BOA-NAT-LOT-04833
2	93M-BOA-NAT-LOT-09170
3	93M-BOA-NAT-LOT-01976
4	93M-BOA-NAT-LOT-20021
5	
6	
7	
8	
9	

6TH OF OCTOBER CITY RAIL TRANSIT MONORAIL

The Authority | Consultant: Hill International | Main Contractor: ORASCOM CONSTRUCTION, BOMBARDIER | Structural Designer: INNOVA TRANSPORTATION

KEY PLAN:

SCALE: AS SHOWN | SHOP DRAWING | DATE: 08/29/2023

REV	DATE	DSG.	CHK.	APP.	AMENDMENTS	STATUS
B	08/29/2023	M.KH	M.KH	DR.M.M	ISSUED FOR INFORMATION	IFI
A	09/21/2022	M.KH	M.KH	DR.M.M	ISSUED FOR INFORMATION	IFI

DRAWING TITLE
6TH OF OCTOBER MONORAIL
SERVICE WALKWAYS
ZONE(1016)
Z16-HR035

Project Code	Rubric	Initiator	Lot	Ref	Number	Revision
93M	047	6ACC	60DE	PDWG	1611	4 B

Tekla structures

Approval is subject to approval of coordination package between multi-discipline.

REVIEWED WITH COMMENT
MONORAILS PROJECT

MATERIAL LIST FOR ASSEMBLY MK'D Z16-HR029

Mark	Profile	GRADE	No.	Length	Area	Weight
Z16-HR029	CHS48.3*4.0	S235JR	1	4280	0.64	18.71
W756	ROD32	S235JR	1	100	0.01	0.60
W845	PL3*45	S355JR	1	45	0.00	0.03
				Total	0.66	19.35

BOLT LIST:-

BOLT \ STUD	BOLT DESCRIPTION	QTY	FINISH

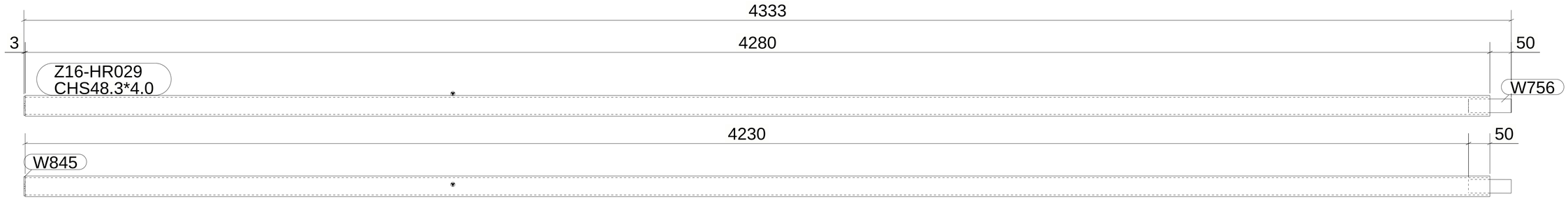

1 *REQUIRED AS DRAWN MARKED* Z16-HR029

6 October Monorail
Engineering Unit
Valid For Construction

GENERAL NOTES:

1. THE DIMENSIONS SHOWN ARE NOMINAL (IN MILLIMETERS), U.N.O.
2. WELD SIZESHALL BE AISC MINIMUM OF 6 mm UNLESS NOTED OTHERWISE.
3. ALL FIELD WELDS SHALL BE INSPECTED PER QUALITY ASSURANCE AND SPECIAL INSPECTIONS.

REFERENCE DRAWINGS

1	93M-BOA-NAT-LOT-04833
2	93M-BOA-NAT-LOT-09170
3	93M-BOA-NAT-LOT-01976
4	93M-BOA-NAT-LOT-20021
5	
6	
7	
8	
9	

6TH OF OCTOBER CITY RAIL TRANSIT MONORAIL

The Authority | Consultant: Hill International | Main Contractor: ORASCOM CONSTRUCTION, BOMBARDIER | Structural Designer: INNOVA TRANSPORTATION

KEY PLAN:

SCALE	SHOP DRAWING	DATE
AS SHOWN		08/29/2023

REV	DATE	DSG.	CHK.	APP.	AMENDMENTS	STATUS
B	08/29/2023	M.KH	M.KH	DR.M.M	ISSUED FOR INFORMATION	IFI
A	09/21/2022	M.KH	M.KH	DR.M.M	ISSUED FOR INFORMATION	IFI

DRAWING TITLE
6TH OF OCTOBER MONORAIL
SERVICE WALKWAYS
ZONE(1016)
Z16-HR029

Project Code	Rubric	Initiator	Lot	Ref	Number	Revision
93M	047	ACC	60	DEP	DWG	16115	B

Tekla structures

Approval is subject to approval of coordination package between multi-discipline.

REVIEWED WITH COMMENT MONORAILS PROJECT

MATERIAL LIST FOR ASSEMBLY MK'D Z16-HR027

Mark	Profile	GRADE	No.	Length	Area	Weight
Z16-HR027	CHS48.3*4.0	S235JR	1	5000	0.75	21.86
W756	ROD32	S235JR	1	100	0.01	0.60
				Total	0.76	22.47

BOLT LIST:-

BOLT \ STUD	BOLT DESCRIPTION	QTY	FINISH

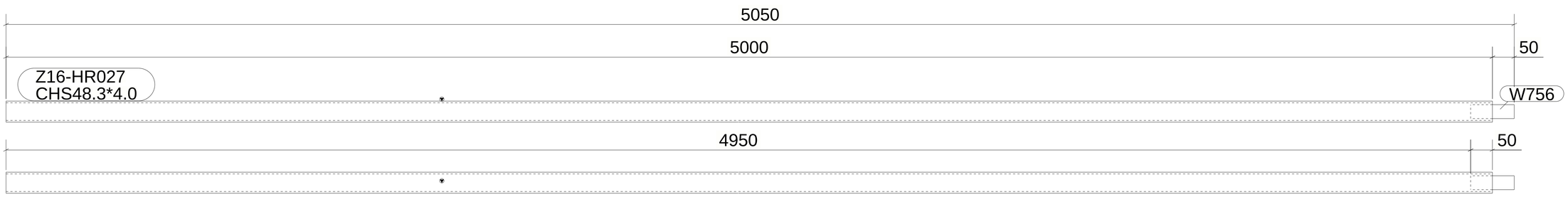

1 *REQUIRED AS DRAWN MARKED* Z16-HR027

6 October Monorail Engineering Unit
Valid For Construction

GENERAL NOTES:

1. THE DIMENSIONS SHOWN ARE NOMINAL (IN MILLIMETERS), U.N.O.
2. WELD SIZESHALL BE AISC MINIMUM OF 6 mm UNLESS NOTED OTHERWISE.
3. ALL FIELD WELDS SHALL BE INSPECTED PER QUALITY ASSURANCE AND SPECIAL INSPECTIONS.

REFERENCE DRAWINGS

1	93M-BOA-NAT-LOT-04833
2	93M-BOA-NAT-LOT-09170
3	93M-BOA-NAT-LOT-01976
4	93M-BOA-NAT-LOT-20021
5	
6	
7	
8	
9	

6TH OF OCTOBER CITY RAIL TRANSIT MONORAIL

The Authority | Hill International Consultant | ORASCOM BOMBARDIER Main Contractor | INNOVA Structural Designer

KEY PLAN:

SCALE: AS SHOWN | SHOPDRAWING | DATE: 08/29/2023

REV	DATE	DSG.	CHK.	APP.	AMENDMENTS	STATUS
B	08/29/2023	M.KH	M.KH	DR.M.M	ISSUED FOR INFORMATION	IFI
A	09/21/2022	M.KH	M.KH	DR.M.M	ISSUED FOR INFORMATION	IFI

DRAWING TITLE
6TH OF OCTOBER MONORAIL SERVICE WALKWAYS ZONE(1016)
Z16-HR027

Project Code	Rubric	Initiator	Lot	Ref	Number	Revision
93M	0476	ACC	60DEP	DWG	16116	B

Tekla structures

Approval is subject to approval of coordination package between multi-discipline.

REVIEWED WITH COMMENT
MONORAILS PROJECT

MATERIAL LIST FOR ASSEMBLY MK'D Z16-HR014

Mark	Profile	GRADE	No.	Length	Area	Weight
Z16-HR014	CHS48.3*4.0	S235JR	1	2427	0.36	10.61
W748	ROD32	S235JR	1	100	0.01	0.60
				Total	0.38	11.22

BOLT LIST:-

BOLT \ STUD	BOLT DESCRIPTION	QTY	FINISH

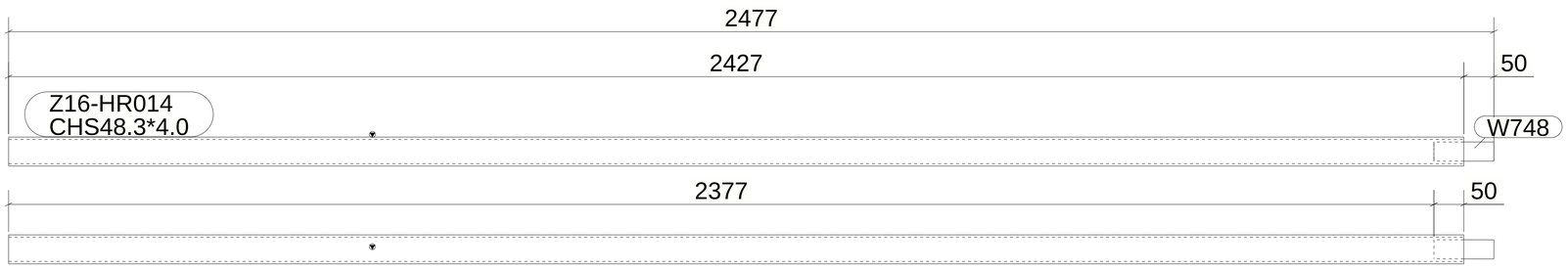

1 *REQUIRED AS DRAWN MARKED* Z16-HR014

GENERAL NOTES:

1. THE DIMENSIONS SHOWN ARE NOMINAL (IN MILLIMETERS), U.N.O.
2. WELD SIZESHALL BE AISC MINIMUM OF 6 mm UNLESS NOTED OTHERWISE.
3. ALL FIELD WELDS SHALL BE INSPECTED PER QUALITY ASSURANCE AND SPECIAL INSPECTIONS.

REFERENCE DRAWINGS

1	93M-BOA-NAT-LOT-04833
2	93M-BOA-NAT-LOT-09170
3	93M-BOA-NAT-LOT-01976
4	93M-BOA-NAT-LOT-20021
5	
6	
7	
8	
9	

6TH OF OCTOBER CITY RAIL TRANSIT MONORAIL

The Authority | Consultant: Hill International | Main Contractor: ORASCOM CONSTRUCTION / BOMBARDIER | Structural Designer: INNOVA TRANSPORTATION

6 October Monorail
Engineering Unit
Valid For Construction

KEY PLAN:

SCALE: AS SHOWN | SHOP DRAWING | DATE: 08/29/2023

REV	DATE	DSG.	CHK.	APP.	AMENDMENTS	STATUS
B	08/29/2023	M.KH	M.KH	DR.M.M	ISSUED FOR INFORMATION	IFI
A	09/21/2022	M.KH	M.KH	DR.M.M	ISSUED FOR INFORMATION	IFI

DRAWING TITLE
6TH OF OCTOBER MONORAIL
SERVICE WALKWAYS
ZONE(1016)
Z16-HR014

Project Code	Rubric	Initiator	Lot	Ref	Number	Revision
93M	0476	ACC	60	DEP	DWG	16117	B

Tekla structures

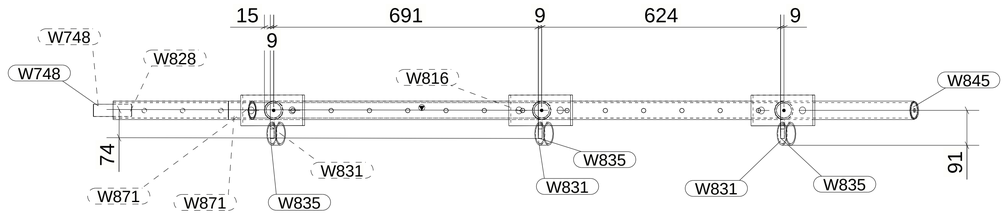

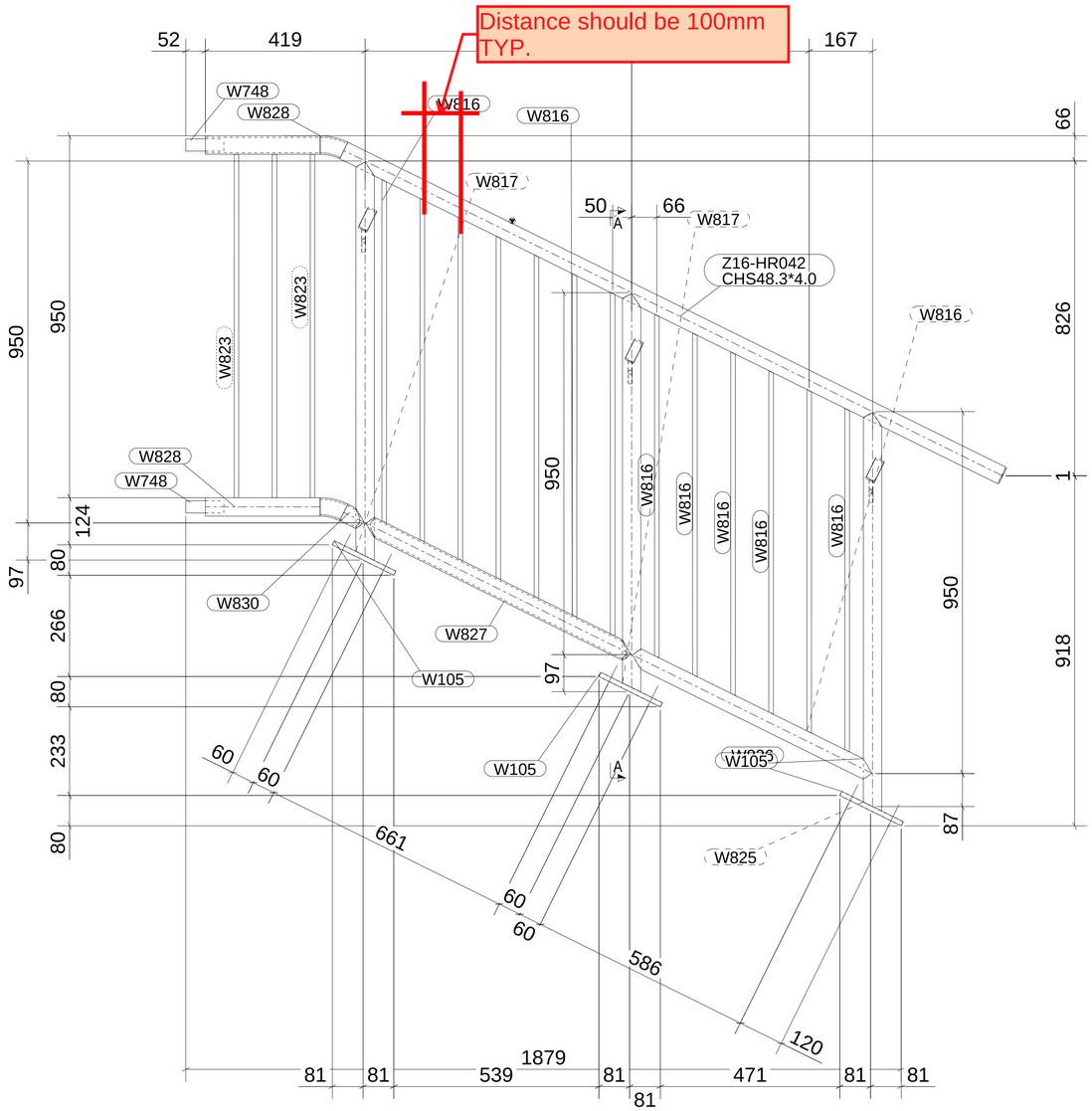

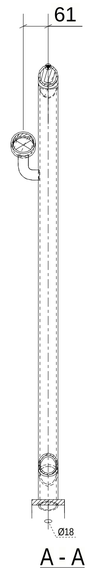

MATERIAL LIST FOR ASSEMBLY MK'D Z16-HR042

Mark	Profile	GRADE	No.	Length	Area	Weight
Z16-HR042	CHS48.3*4.0	S235JR	1	1927	0.29	8.43
W105	PL12*80	S355JR	3	180	0.04	1.36
W748	ROD32	S235JR	2	100	0.01	0.60
W816	ROD12	S355JR	13	902	0.03	0.72
W817	CHS48.3*4.0	S235JR	2	1047	0.16	4.58
W823	ROD12	S355JR	3	901	0.03	0.72
W825	CHS48.3*4.0	S235JR	1	1047	0.16	4.58
W826	CHS48.3*4.0	S235JR	1	702	0.11	3.07
W827	CHS48.3*4.0	S235JR	1	777	0.12	3.40
W828	CHS48.3*4.0	S235JR	2	301	0.05	1.32
W830	CHS48.3*4.0	S235JR	1	60	0.01	0.26
W831	PIPE2SCH40	S235JR	3	25	0.01	0.14
W835	PL10*25	S355JR	3	80	0.01	0.14
W845	PL3*45	S355JR	1	45	0.00	0.03
W871	CHS48.3*4.0	S235JR	2	64	0.01	0.28
				Total	1.80	49.70

BOLT LIST:-

BOLT \ STUD	BOLT DESCRIPTION		QTY	FINISH
BOLT	B1N2W16 X 60	A325M	6	

1 *REQUIRED AS DRAWN MARKED* Z16-HR042

GENERAL NOTES:

1. THE DIMENSIONS SHOWN ARE NOMINAL (IN MILLIMETERS), U.N.O.
2. WELD SIZESHALL BE AISC MINIMUM OF 6 mm UNLESS NOTED OTHERWISE.
3. ALL FIELD WELDS SHALL BE INSPECTED PER QUALITY ASSURANCE AND SPECIAL INSPECTIONS.

REFERENCE DRAWINGS

1	93M-BOA-NAT-LOT-04833
2	93M-BOA-NAT-LOT-09170
3	93M-BOA-NAT-LOT-01976
4	93M-BOA-NAT-LOT-20021
5	
6	
7	
8	
9	

6TH OF OCTOBER CITY RAIL TRANSIT MONORAIL

The Authority — Consultant — Main Contractor — Structural Designer

KEY PLAN:

SCALE: AS SHOWN | SHOP DRAWING | DATE: 08/29/2023

REV	DATE	DSG.	CHK.	APP.	AMENDMENTS	STATUS
B	08/29/2023	M.KH	M.KH	DR.M.M	ISSUED FOR INFORMATION	IFI
A	09/21/2022	M.KH	M.KH	DR.M.M	ISSUED FOR INFORMATION	IFI

DRAWING TITLE
6TH OF OCTOBER MONORAIL
SERVICE WALKWAYS
ZONE(1016)
Z16-HR042

Project Code	Rubric	Initiator	Lot	Ref	Number	Revision
9 3 M	0 4 7 6	A C C	6 0 D E P	D W G	1 6 1 1 8	B

6 October Monorail
Engineering Unit
Valid For Construction

REVIEWED WITH COMMENT
MONORAILS PROJECT

Tekla structures

Approval is subject to approval of coordination package between multi-discipline.

REVIEWED WITH COMMENT
MONORAILS PROJECT

MATERIAL LIST FOR ASSEMBLY MK'D Z16-HR020

Mark	Profile	GRADE	No.	Length	Area	Weight
Z16-HR020	CHS48.3*4.0	S235JR	1	5997	0.90	26.22
W756	ROD32	S235JR	1	100	0.01	0.60
				Total	0.91	26.82

BOLT LIST:-

BOLT \ STUD	BOLT DESCRIPTION	QTY	FINISH

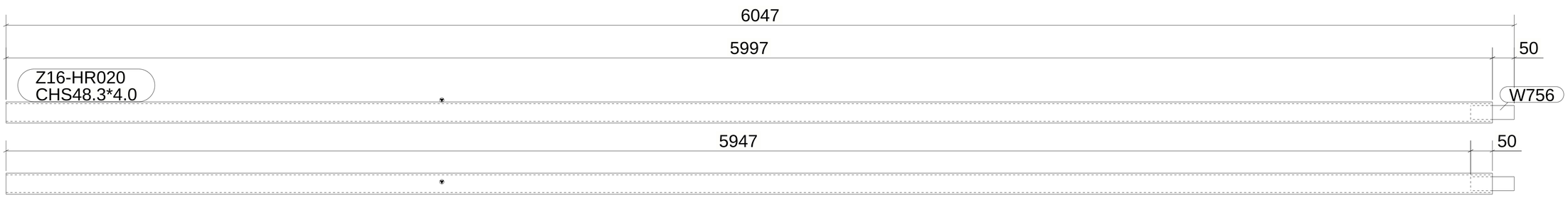

4 *REQUIRED AS DRAWN MARKED* Z16-HR020

6 October Monorail
Engineering Unit
Valid For Construction

GENERAL NOTES:

1. THE DIMENSIONS SHOWN ARE NOMINAL (IN MILLIMETERS), U.N.O.
2. WELD SIZESHALL BE AISC MINIMUM OF 6 mm UNLESS NOTED OTHERWISE.
3. ALL FIELD WELDS SHALL BE INSPECTED PER QUALITY ASSURANCE AND SPECIAL INSPECTIONS.

REFERENCE DRAWINGS

1	93M-BOA-NAT-LOT-04833
2	93M-BOA-NAT-LOT-09170
3	93M-BOA-NAT-LOT-01976
4	93M-BOA-NAT-LOT-20021
5	
6	
7	
8	
9	

6TH OF OCTOBER CITY RAIL TRANSIT MONORAIL

The Authority — Hill International Consultant — Main Contractor — Structural Designer

KEY PLAN:

SCALE: AS SHOWN | SHOP DRAWING | DATE: 08/29/2023

REV	DATE	DSG.	CHK.	APP.	AMENDMENTS	STATUS
B	08/29/2023	M.KH	M.KH	DR.M.M	ISSUED FOR INFORMATION	IFI
A	09/21/2022	M.KH	M.KH	DR.M.M	ISSUED FOR INFORMATION	IFI

DRAWING TITLE
6TH OF OCTOBER MONORAIL
SERVICE WALKWAYS
ZONE(1016)
Z16-HR020

Project Code	Rubric	Initiator	Lot	Ref	Number	Revision
93M	0476	ACC	60DEP	DWG	16119	B

Trekla structures

Approval is subject to approval of coordination package between multi-discipline.

REVIEWED WITH COMMENT
MONORAILS PROJECT

MATERIAL LIST FOR ASSEMBLY MK'D Z16-HR032

Mark	Profile	GRADE	No.	Length	Area	Weight
Z16-HR032	CHS48.3*4.0	S235JR	1	2365	0.35	10.34
W756	ROD32	S235JR	1	100	0.01	0.60
				Total	0.37	10.94

BOLT LIST:-

BOLT \ STUD	BOLT DESCRIPTION	QTY	FINISH

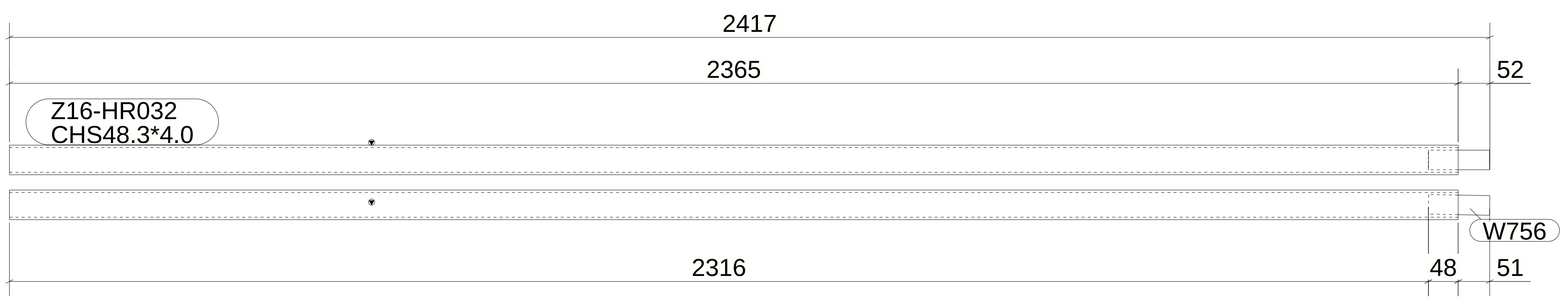

1 *REQUIRED AS DRAWN MARKED* Z16-HR032

6 October Monorail
Engineering Unit
Valid For Construction

GENERAL NOTES:

1. THE DIMENSIONS SHOWN ARE NOMINAL (IN MILLIMETERS), U.N.O.
2. WELD SIZESHALL BE AISC MINIMUM OF 6 mm UNLESS NOTED OTHERWISE.
3. ALL FIELD WELDS SHALL BE INSPECTED PER QUALITY ASSURANCE AND SPECIAL INSPECTIONS.

REFERENCE DRAWINGS

1	93M-BOA-NAT-LOT-04833
2	93M-BOA-NAT-LOT-09170
3	93M-BOA-NAT-LOT-01976
4	93M-BOA-NAT-LOT-20021
5	
6	
7	
8	
9	

6TH OF OCTOBER CITY RAIL TRANSIT MONORAIL

The Authority — Consultant — Main Contractor — Structural Designer

KEY PLAN:

SCALE: AS SHOWN | SHOP DRAWING | DATE: 08/29/2023

REV	DATE	DSG.	CHK.	APP.	AMENDMENTS	STATUS
B	08/29/2023	M.KH	M.KH	DR.M.M	ISSUED FOR INFORMATION	IFI
A	09/21/2022	M.KH	M.KH	DR.M.M	ISSUED FOR INFORMATION	IFI

DRAWING TITLE
6TH OF OCTOBER MONORAIL
SERVICE WALKWAYS
ZONE(1016)
Z16-HR032

Project Code	Rubric	Initiator	Lot	Ref	Number	Revision
93M	0476	ACC	60DEP	DWG	16120	B

Tekla structures

Approval is subject to approval of coordination package between multi-discipline.

REVIEWED WITH COMMENT
MONORAILS PROJECT

MATERIAL LIST FOR ASSEMBLY MK'D Z16-HR037

Mark	Profile	GRADE	No.	Length	Area	Weight
Z16-HR037	CHS48.3*4.0	S235JR	1	2974	0.45	13.00
				Total	0.45	13.00

BOLT LIST:-

BOLT \ STUD	BOLT DESCRIPTION	QTY	FINISH

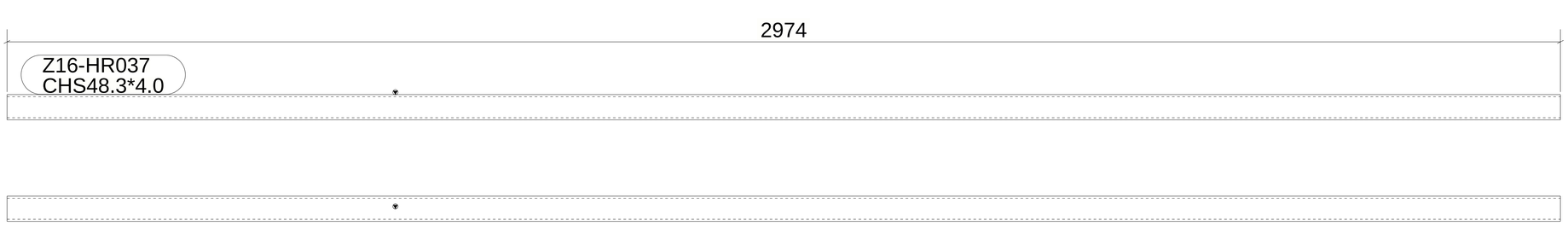

1 *REQUIRED AS DRAWN MARKED* Z16-HR037

6 October Monorail
Engineering Unit
Valid For Construction

GENERAL NOTES:

1. THE DIMENSIONS SHOWN ARE NOMINAL (IN MILLIMETERS), U.N.O.
2. WELD SIZESHALL BE AISC MINIMUM OF 6 mm UNLESS NOTED OTHERWISE.
3. ALL FIELD WELDS SHALL BE INSPECTED PER QUALITY ASSURANCE AND SPECIAL INSPECTIONS.

REFERENCE DRAWINGS

1	93M-BOA-NAT-LOT-04833
2	93M-BOA-NAT-LOT-09170
3	93M-BOA-NAT-LOT-01976
4	93M-BOA-NAT-LOT-20021
5	
6	
7	
8	
9	

6TH OF OCTOBER CITY RAIL TRANSIT MONORAIL

The Authority — Consultant — Main Contractor — Structural Designer

KEY PLAN:

SCALE	SHOP DRAWING	DATE
AS SHOWN		08/29/2023

REV	DATE	DSG.	CHK.	APP.	AMENDMENTS	STATUS
B	08/29/2023	M.KH	M.KH	DR.M.M	ISSUED FOR INFORMATION	IFI
A	09/21/2022	M.KH	M.KH	DR.M.M	ISSUED FOR INFORMATION	IFI

DRAWING TITLE
6TH OF OCTOBER MONORAIL
SERVICE WALKWAYS
ZONE(1016)
Z16-HR037

Project Code	Rubric	Initiator	Lot	Ref	Number	Revision
93M047	ACC60	DEP	DWG	1612	1	B

Tekla structures

Approval is subject to approval of coordination package between multi-discipline.

REVIEWED WITH COMMENT
MONORAILS PROJECT

MATERIAL LIST FOR ASSEMBLY MK'D Z16-HR039

Mark	Profile	GRADE	No.	Length	Area	Weight
Z16-HR039	CHS48.3*4.0	S235JR	1	2224	0.33	9.73
				Total	0.33	9.73

BOLT LIST:-

BOLT \ STUD	BOLT DESCRIPTION	QTY	FINISH

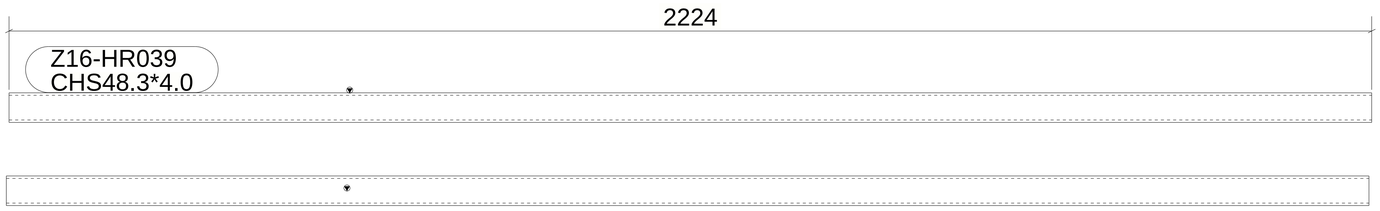

1 *REQUIRED AS DRAWN MARKED* Z16-HR039

6 October Monorail
Engineering Unit
Valid For Construction

GENERAL NOTES:

1. THE DIMENSIONS SHOWN ARE NOMINAL (IN MILLIMETERS), U.N.O.
2. WELD SIZESHALL BE AISC MINIMUM OF 6 mm UNLESS NOTED OTHERWISE.
3. ALL FIELD WELDS SHALL BE INSPECTED PER QUALITY ASSURANCE AND SPECIAL INSPECTIONS.

REFERENCE DRAWINGS

1	93M-BOA-NAT-LOT-04833
2	93M-BOA-NAT-LOT-09170
3	93M-BOA-NAT-LOT-01976
4	93M-BOA-NAT-LOT-20021
5	
6	
7	
8	
9	

6TH OF OCTOBER CITY RAIL TRANSIT MONORAIL

The Authority | Consultant: Hill International | Main Contractor: ORASCOM CONSTRUCTION, BOMBARDIER | Structural Designer: INNOVA TRANSPORTATION

KEY PLAN:

SCALE	SHOP DRAWING	DATE
AS SHOWN		08/29/2023

REV	DATE	DSG.	CHK.	APP.	AMENDMENTS	STATUS
B	08/29/2023	M.KH	M.KH	DR.M.M	ISSUED FOR INFORMATION	IFI
A	09/21/2022	M.KH	M.KH	DR.M.M	ISSUED FOR INFORMATION	IFI

DRAWING TITLE
6TH OF OCTOBER MONORAIL
SERVICE WALKWAYS
ZONE(1016)
Z16-HR039

Project Code	Rubric	Initiator	Lot	Ref	Number	Revision
93M0476	ACC60DEP	DWG	1612	2		B

Tekla structures

Approval is subject to approval of coordination package between multi-discipline.

REVIEWED WITH COMMENT
MONORAILS PROJECT

MATERIAL LIST FOR ASSEMBLY MK'DZ16-HR006

Mark	Profile	GRADE	No.	Length	Area	Weight
Z16-HR006	CHS48.3*4.0	S235JR	1	3811	0.57	16.66
W119	CHS48.3*4.0	S235JR	1	22	0.00	0.10
W145	CHS48.3*4.0	S235JR	1	173	0.03	0.75
W150	CHS48.3*4.0	S235JR	1	75	0.01	0.33
W820	CHS48.3*4.0	S235JR	1	330	0.05	1.44
W845	PL3*45	S355JR	1	45	0.00	0.03
W856	CHS48.3*4.0	S235JR	1	709	0.11	3.10
W871	CHS48.3*4.0	S235JR	1	64	0.01	0.28
				Total	0.78	22.71

BOLT LIST:-

BOLT \ STUD	BOLT DESCRIPTION	QTY	FINISH

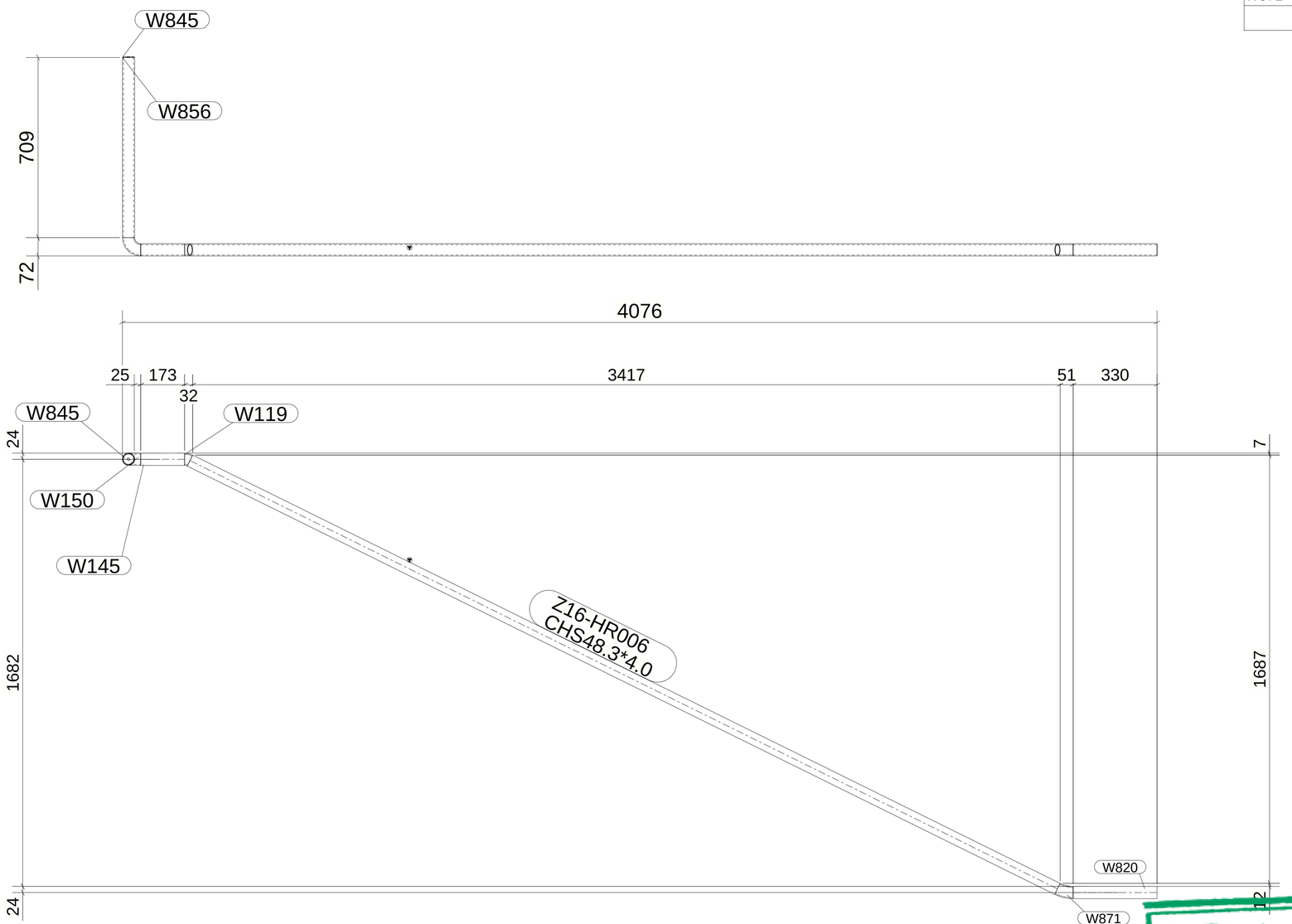

1 *REQUIRED AS DRAWN MARKED* Z16-HR006

6 October Monorail
Engineering Unit
Valid For Construction

GENERAL NOTES:

1. THE DIMENSIONS SHOWN ARE NOMINAL (IN MILLIMETERS), U.N.O.
2. WELD SIZESHALL BE AISC MINIMUM OF 6 mm UNLESS NOTED OTHERWISE.
3. ALL FIELD WELDS SHALL BE INSPECTED PER QUALITY ASSURANCE AND SPECIAL INSPECTIONS.

REFERENCE DRAWINGS

1	93M-BOA-NAT-LOT-04833
2	93M-BOA-NAT-LOT-09170
3	93M-BOA-NAT-LOT-01976
4	93M-BOA-NAT-LOT-20021
5	
6	
7	
8	
9	

6TH OF OCTOBER CITY RAIL TRANSIT MONORAIL

The Authority | Consultant: Hill International | Main Contractor: ORASCOM CONSTRUCTION, BOMBARDIER | Structural Designer: INNOVA TRANSPORTATION

KEY PLAN:

SCALE: AS SHOWN | SHOP DRAWING | DATE: 08/29/2023

DRAWING TITLE
6TH OF OCTOBER MONORAIL
SERVICE WALKWAYS
ZONE(1016)
Z16-HR006

REV	DATE	DSG.	CHK.	APP.	AMENDMENTS	STATUS
B	08/29/2023	M.KH	M.KH	DR.M.M	ISSUED FOR INFORMATION	IFI
A	09/21/2022	M.KH	M.KH	DR.M.M	ISSUED FOR INFORMATION	IFI

Project Code	Rubric	Initiator	Lot	Ref	Number	Revision
93MO476	ACC60DEP	DWG	16123			B

Tekla structures

Approval is subject to approval of coordination package between multi-discipline.

REVIEWED WITH COMMENT
MONORAILS PROJECT

MATERIAL LIST FOR ASSEMBLY MK'D Z16-HR018

Mark	Profile	GRADE	No.	Length	Area	Weight
Z16-HR018	CHS48.3*4.0	S235JR	1	3566	0.53	15.59
W748	ROD32	S235JR	1	100	0.01	0.60
				Total	0.55	16.20

BOLT LIST:-

BOLT \ STUD	BOLT DESCRIPTION	QTY	FINISH

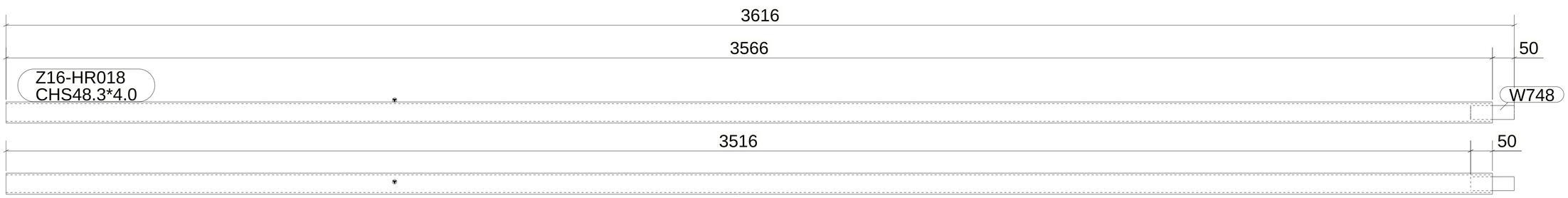

1 *REQUIRED AS DRAWN MARKED* Z16-HR018

GENERAL NOTES:

1. THE DIMENSIONS SHOWN ARE NOMINAL (IN MILLIMETERS), U.N.O.
2. WELD SIZESHALL BE AISC MINIMUM OF 6 mm UNLESS NOTED OTHERWISE.
3. ALL FIELD WELDS SHALL BE INSPECTED PER QUALITY ASSURANCE AND SPECIAL INSPECTIONS.

REFERENCE DRAWINGS

1	93M-BOA-NAT-LOT-04833
2	93M-BOA-NAT-LOT-09170
3	93M-BOA-NAT-LOT-01976
4	93M-BOA-NAT-LOT-20021
5	
6	
7	
8	
9	

6TH OF OCTOBER CITY RAIL TRANSIT MONORAIL

The Authority — Consultant — Main Contractor — Structural Designer

6 October Monorail
Engineering Unit
Valid For Construction

KEY PLAN:

SCALE: AS SHOWN | SHOP DRAWING | DATE: 08/29/2023

REV	DATE	DSG.	CHK.	APP.	AMENDMENTS	STATUS
B	08/29/2023	M.KH	M.KH	DR.M.M	ISSUED FOR INFORMATION	IFI
A	09/21/2022	M.KH	M.KH	DR.M.M	ISSUED FOR INFORMATION	IFI

DRAWING TITLE
6TH OF OCTOBER MONORAIL
SERVICE WALKWAYS
ZONE(1016)
Z16-HR018

Project Code	Rubric	Initiator	Lot	Ref	Number	Revision
93M	0476	ACC	60DEP	DWG	16124	B

Trekla structures

Approval is subject to approval of coordination package between multi-discipline.

REVIEWED WITH COMMENT
MONORAILS PROJECT

MATERIAL LIST FOR ASSEMBLY MK'D Z16-HR028

Mark	Profile	GRADE	No.	Length	Area	Weight
Z16-HR028	CHS48.3*4.0	S235JR	1	5965	0.89	26.08
W756	ROD32	S235JR	1	100	0.01	0.60
				Total	0.91	26.68

BOLT LIST:-

BOLT \ STUD	BOLT DESCRIPTION	QTY	FINISH

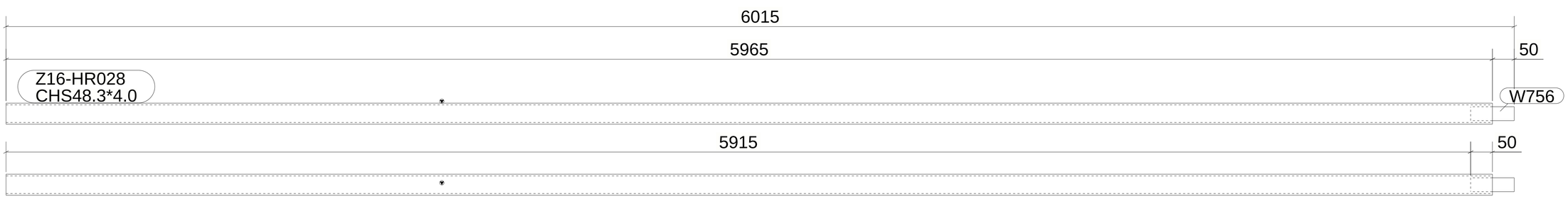

1 *REQUIRED AS DRAWN MARKED* Z16-HR028

GENERAL NOTES:

1. THE DIMENSIONS SHOWN ARE NOMINAL (IN MILLIMETERS), U.N.O.
2. WELD SIZESHALL BE AISC MINIMUM OF 6 mm UNLESS NOTED OTHERWISE.
3. ALL FIELD WELDS SHALL BE INSPECTED PER QUALITY ASSURANCE AND SPECIAL INSPECTIONS.

REFERENCE DRAWINGS

1	93M-BOA-NAT-LOT-04833
2	93M-BOA-NAT-LOT-09170
3	93M-BOA-NAT-LOT-01976
4	93M-BOA-NAT-LOT-20021
5	
6	
7	
8	
9	

6TH OF OCTOBER CITY RAIL TRANSIT MONORAIL

The Authority — Consultant — Main Contractor — Structural Designer

KEY PLAN:

6 October Monorail
Engineering Unit
Valid For Construction

SCALE	SHOP DRAWING	DATE
AS SHOWN		08/29/2023

REV	DATE	DSG.	CHK.	APP.	AMENDMENTS	STATUS
B	08/29/2023	M.KH	M.KH	DR.M.M	ISSUED FOR INFORMATION	IFI
A	09/21/2022	M.KH	M.KH	DR.M.M	ISSUED FOR INFORMATION	IFI

DRAWING TITLE
6TH OF OCTOBER MONORAIL
SERVICE WALKWAYS
ZONE(1016)
Z16-HR028

Project Code	Rubric	Initiator	Lot	Ref	Number	Revision
9 3 M	0 4 7 6	A C C	6 0 D E P	D W G	1 6 1 2 5	B

Trekla structures

Approval is subject to approval of coordination package between multi-discipline.

REVIEWED WITH COMMENT
MONORAILS PROJECT

MATERIAL LIST FOR ASSEMBLY MK'D Z16-HR019

Mark	Profile	GRADE	No.	Length	Area	Weight
Z16-HR019	CHS48.3*4.0	S235JR	1	2381	0.36	10.41
				Total	0.36	10.41

BOLT LIST:-

BOLT \ STUD	BOLT DESCRIPTION	QTY	FINISH

1 *REQUIRED AS DRAWN MARKED* Z16-HR019

6 October Monorail
Engineering Unit
Valid For Construction

GENERAL NOTES:

1. THE DIMENSIONS SHOWN ARE NOMINAL (IN MILLIMETERS), U.N.O.
2. WELD SIZESHALL BE AISC MINIMUM OF 6 mm UNLESS NOTED OTHERWISE.
3. ALL FIELD WELDS SHALL BE INSPECTED PER QUALITY ASSURANCE AND SPECIAL INSPECTIONS.

REFERENCE DRAWINGS

1	93M-BOA-NAT-LOT-04833
2	93M-BOA-NAT-LOT-09170
3	93M-BOA-NAT-LOT-01976
4	93M-BOA-NAT-LOT-20021
5	
6	
7	
8	
9	

6TH OF OCTOBER CITY RAIL TRANSIT MONORAIL

The Authority — Consultant — Main Contractor — Structural Designer

KEY PLAN:

SCALE: AS SHOWN | SHOP DRAWING | DATE: 08/29/2023

REV	DATE	DSG.	CHK.	APP.	AMENDMENTS	STATUS
B	08/29/2023	M.KH	M.KH	DR.M.M	ISSUED FOR INFORMATION	IFI
A	09/21/2022	M.KH	M.KH	DR.M.M	ISSUED FOR INFORMATION	IFI

DRAWING TITLE
6TH OF OCTOBER MONORAIL
SERVICE WALKWAYS
ZONE(1016)
Z16-HR019

Project Code	Rubric	Initiator	Lot	Ref	Number	Revision
93	M047	6ACC	60DE	PDWG	16126	B

Tekla structures

1-Same comment as
93M-0476-ACC-60DEP-DWG-16118-B.

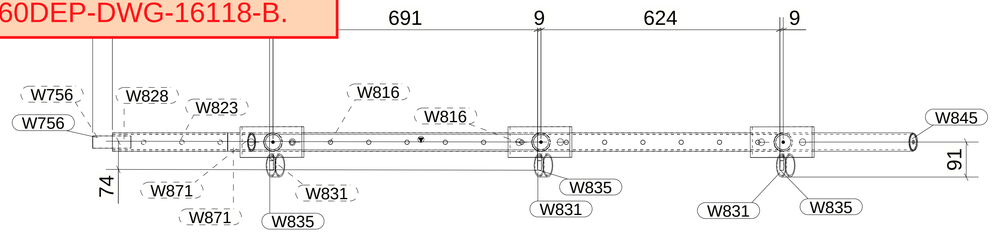

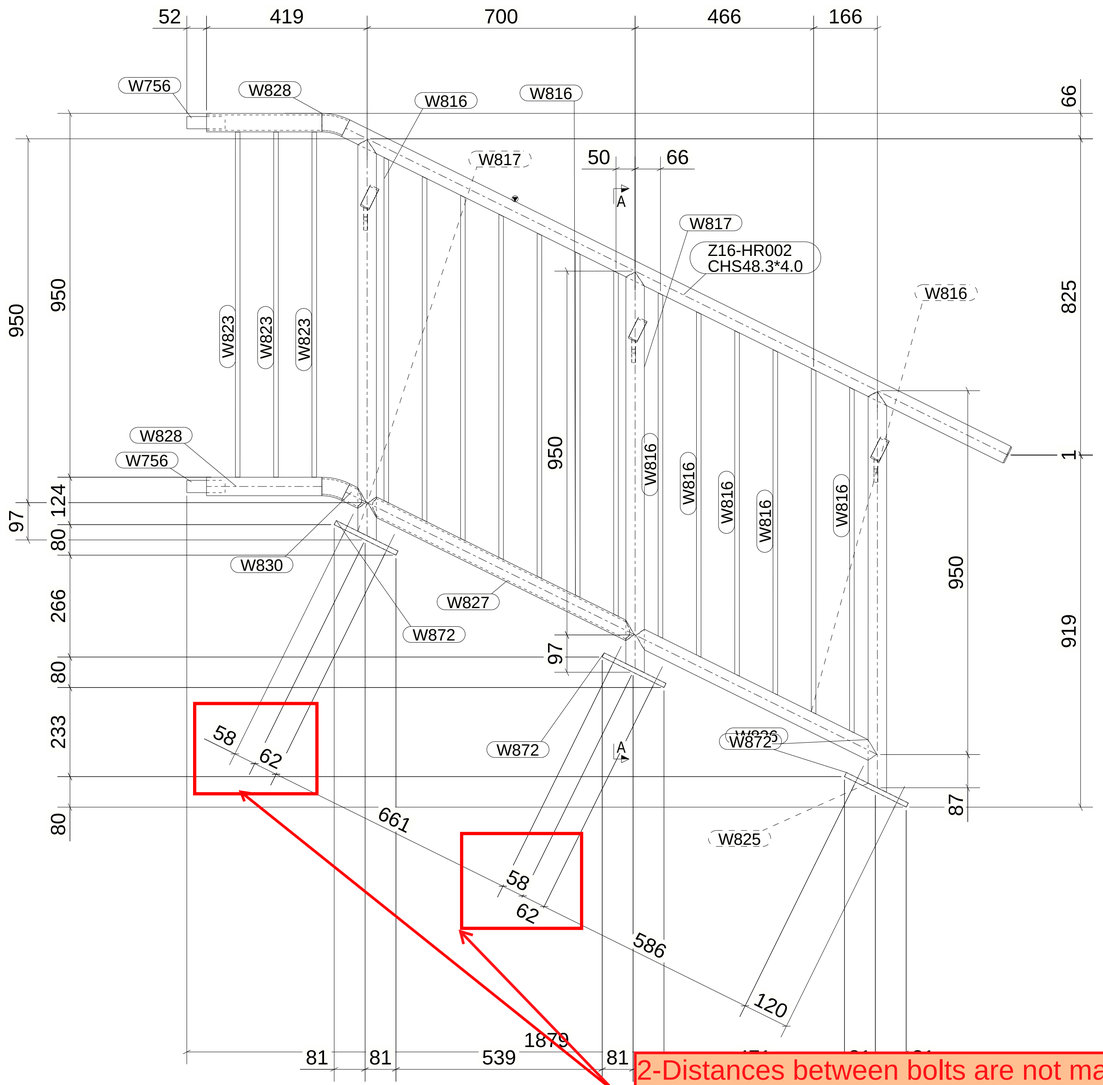

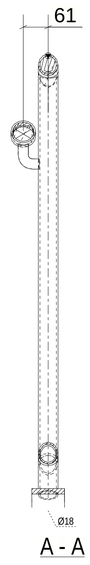

2-Distances between bolts are not matching with design drawings.

1 *REQUIRED AS DRAWN MARKED* Z16-HR002

MATERIAL LIST FOR ASSEMBLY MK'D Z16-HR002

Mark	Profile	GRADE	No.	Length	Area	Weight
Z16-HR002	CHS48.3*4.0	S235JR	1	1926	0.29	8.42
W756	ROD32	S235JR	2	100	0.01	0.60
W816	ROD12	S355JR	13	902	0.03	0.72
W817	CHS48.3*4.0	S235JR	2	1047	0.16	4.58
W823	ROD12	S355JR	3	901	0.03	0.72
W825	CHS48.3*4.0	S235JR	1	1047	0.16	4.58
W826	CHS48.3*4.0	S235JR	1	702	0.11	3.07
W827	CHS48.3*4.0	S235JR	1	777	0.12	3.40
W828	CHS48.3*4.0	S235JR	2	301	0.05	1.32
W830	CHS48.3*4.0	S235JR	1	60	0.01	0.26
W831	PIPE2SCH40	S235JR	3	25	0.01	0.14
W835	PL10*25	S355JR	3	80	0.01	0.14
W845	PL3*45	S355JR	1	45	0.00	0.03
W871	CHS48.3*4.0	S235JR	2	64	0.01	0.28
W872	PL12*80	S355JR	3	180	0.04	1.36
				Total	1.80	49.69

BOLT LIST:-

BOLT \ STUD	BOLT DESCRIPTION		QTY	FINISH
BOLT	B1N2W16 X 60	A325M	6	

6 October Monorail
Engineering Unit
Valid For Construction

REVIEWED WITH COMMENT
MONORAILS PROJECT

GENERAL NOTES:

1. THE DIMENSIONS SHOWN ARE NOMINAL (IN MILLIMETERS), U.N.O.
2. WELD SIZESHALL BE AISC MINIMUM OF 6 mm UNLESS NOTED OTHERWISE.
3. ALL FIELD WELDS SHALL BE INSPECTED PER QUALITY ASSURANCE AND SPECIAL INSPECTIONS.

REFERENCE DRAWINGS

1	93M-BOA-NAT-LOT-04833
2	93M-BOA-NAT-LOT-09170
3	93M-BOA-NAT-LOT-01976
4	93M-BOA-NAT-LOT-20021
5	
6	
7	
8	
9	

6TH OF OCTOBER CITY RAIL TRANSIT MONORAIL

The Authority — Hill International Consultant — Main Contractor — Structural Designer

KEY PLAN:

SCALE: AS SHOWN | SHOP DRAWING | DATE: 08/29/2023

DRAWING TITLE
6TH OF OCTOBER MONORAIL
SERVICE WALKWAYS
ZONE(1016)
Z16-HR002

REV	DATE	DSG.	CHK.	APP.	AMENDMENTS	STATUS
B	08/29/2023	M.KH	M.KH	DR.M.M	ISSUED FOR INFORMATION	IFI
A	09/21/2022	M.KH	M.KH	DR.M.M	ISSUED FOR INFORMATION	IFI

Project Code	Rubric	Initiator	Lot	Ref	Number	Revision
93M	0476	ACC	60	DEP	DWG16127	B

Trekla structures

Approval is subject to approval of coordination package between multi-discipline.

REVIEWED WITH COMMENT
MONORAILS PROJECT

MATERIAL LIST FOR ASSEMBLY MK'D Z16-HR011

Mark	Profile	GRADE	No.	Length	Area	Weight
Z16-HR011	CHS48.3*4.0	S235JR	1	5098	0.76	22.29
W748	ROD32	S235JR	1	100	0.01	0.60
				Total	0.78	22.89

BOLT LIST:-

BOLT \ STUD	BOLT DESCRIPTION	QTY	FINISH

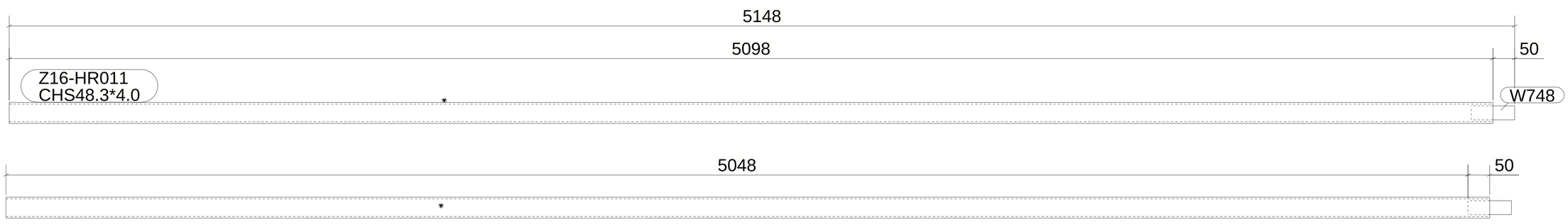

1 *REQUIRED AS DRAWN MARKED* Z16-HR011

6 October Monorail
Engineering Unit
Valid For Construction

GENERAL NOTES:

1. THE DIMENSIONS SHOWN ARE NOMINAL (IN MILLIMETERS), U.N.O.
2. WELD SIZESHALL BE AISC MINIMUM OF 6 mm UNLESS NOTED OTHERWISE.
3. ALL FIELD WELDS SHALL BE INSPECTED PER QUALITY ASSURANCE AND SPECIAL INSPECTIONS.

REFERENCE DRAWINGS

1	93M-BOA-NAT-LOT-04833
2	93M-BOA-NAT-LOT-09170
3	93M-BOA-NAT-LOT-01976
4	93M-BOA-NAT-LOT-20021
5	
6	
7	
8	
9	

6TH OF OCTOBER CITY RAIL TRANSIT MONORAIL

The Authority — Consultant — Main Contractor — Structural Designer

KEY PLAN:

SCALE: AS SHOWN | SHOP DRAWING | DATE: 08/29/2023

REV	DATE	DSG.	CHK.	APP.	AMENDMENTS	STATUS
B	08/29/2023	M.KH	M.KH	DR.M.M	ISSUED FOR INFORMATION	IFI
A	09/21/2022	M.KH	M.KH	DR.M.M	ISSUED FOR INFORMATION	IFI

DRAWING TITLE
6TH OF OCTOBER MONORAIL
SERVICE WALKWAYS
ZONE(1016)
Z16-HR011

Project Code	Rubric	Initiator	Lot	Ref	Number	Revision
93	M047	6ACC	60DE	PDWG	1612	8 B

Tekla structures

Approval is subject to approval of coordination package between multi-discipline.

REVIEWED WITH COMMENT
MONORAILS PROJECT

MATERIAL LIST FOR ASSEMBLY MK'D Z16-HR015

Mark	Profile	GRADE	No.	Length	Area	Weight
Z16-HR015	CHS48.3*4.0	S235JR	1	5996	0.90	26.22
W748	ROD32	S235JR	1	100	0.01	0.60
				Total	0.91	26.82

BOLT LIST:-

BOLT \ STUD	BOLT DESCRIPTION	QTY	FINISH

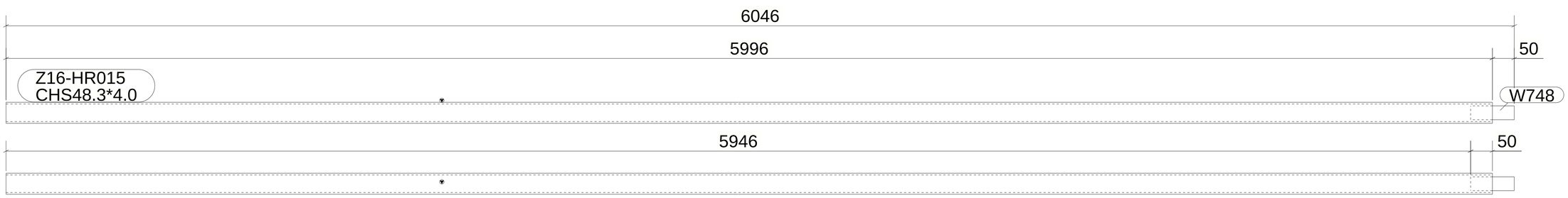

1 *REQUIRED AS DRAWN MARKED* Z16-HR015

GENERAL NOTES:

1. THE DIMENSIONS SHOWN ARE NOMINAL (IN MILLIMETERS), U.N.O.
2. WELD SIZESHALL BE AISC MINIMUM OF 6 mm UNLESS NOTED OTHERWISE.
3. ALL FIELD WELDS SHALL BE INSPECTED PER QUALITY ASSURANCE AND SPECIAL INSPECTIONS.

REFERENCE DRAWINGS

1	93M-BOA-NAT-LOT-04833
2	93M-BOA-NAT-LOT-09170
3	93M-BOA-NAT-LOT-01976
4	93M-BOA-NAT-LOT-20021
5	
6	
7	
8	
9	

6TH OF OCTOBER CITY RAIL TRANSIT MONORAIL

The Authority — Consultant — Main Contractor — Structural Designer

KEY PLAN:

6 October Monorail
Engineering Unit
Valid For Construction

SCALE: AS SHOWN | SHOP DRAWING | DATE: 08/29/2023

REV	DATE	DSG.	CHK.	APP.	AMENDMENTS	STATUS
B	08/29/2023	M.KH	M.KH	DR.M.M	ISSUED FOR INFORMATION	IFI
A	09/21/2022	M.KH	M.KH	DR.M.M	ISSUED FOR INFORMATION	IFI

DRAWING TITLE
6TH OF OCTOBER MONORAIL
SERVICE WALKWAYS
ZONE(1016)
Z16-HR015

Project Code	Rubric	Initiator	Lot	Ref	Number	Revision
93M	0476	ACC	60DEP	DWG	16129	B

Tekla structures

Approval is subject to approval of coordination package between multi-discipline.

REVIEWED WITH COMMENT
MONORAILS PROJECT

MATERIAL LIST FOR ASSEMBLY MK'D Z16-HR010

Mark	Profile	GRADE	No.	Length	Area	Weight
Z16-HR010	CHS48.3*4.0	S235JR	1	3009	0.45	13.16
W748	ROD32	S235JR	1	100	0.01	0.60
				Total	0.46	13.76

BOLT LIST:-

BOLT \ STUD	BOLT DESCRIPTION	QTY	FINISH

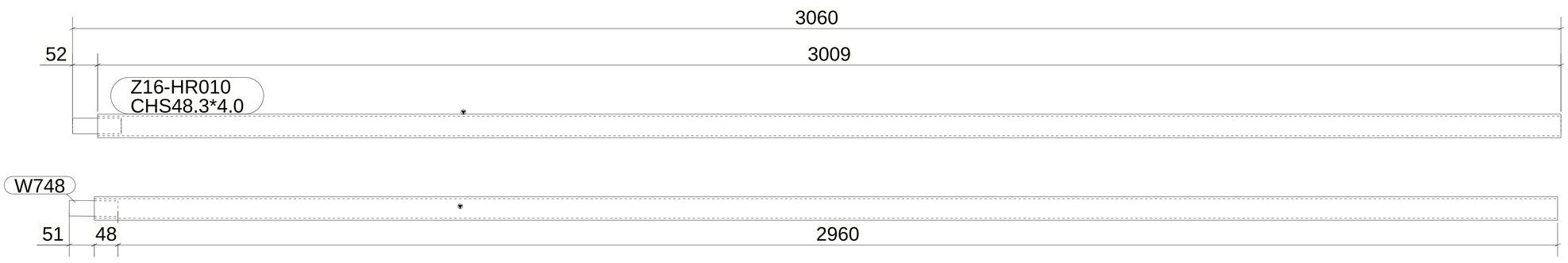

1 *REQUIRED AS DRAWN MARKED* Z16-HR010

6 October Monorail
Engineering Unit
Valid For Construction

GENERAL NOTES:

1. THE DIMENSIONS SHOWN ARE NOMINAL (IN MILLIMETERS), U.N.O.
2. WELD SIZESHALL BE AISC MINIMUM OF 6 mm UNLESS NOTED OTHERWISE.
3. ALL FIELD WELDS SHALL BE INSPECTED PER QUALITY ASSURANCE AND SPECIAL INSPECTIONS.

REFERENCE DRAWINGS

1	93M-BOA-NAT-LOT-04833
2	93M-BOA-NAT-LOT-09170
3	93M-BOA-NAT-LOT-01976
4	93M-BOA-NAT-LOT-20021
5	
6	
7	
8	
9	

6TH OF OCTOBER CITY RAIL TRANSIT MONORAIL

The Authority — Hill International Consultant — Main Contractor — Structural Designer

KEY PLAN:

SCALE: AS SHOWN | SHOP DRAWING | DATE: 08/29/2023

REV	DATE	DSG.	CHK.	APP.	AMENDMENTS	STATUS
B	08/29/2023	M.KH	M.KH	DR.M.M	ISSUED FOR INFORMATION	IFI
A	09/21/2022	M.KH	M.KH	DR.M.M	ISSUED FOR INFORMATION	IFI

DRAWING TITLE
6TH OF OCTOBER MONORAIL
SERVICE WALKWAYS
ZONE(1016)
Z16-HR010

Project Code	Rubric	Initiator	Lot	Ref	Number	Revision
93	M047	6ACC	60DE	PDWG	16130	B

Tekla structures

Approval is subject to approval of coordination package between multi-discipline.

REVIEWED WITH COMMENT
MONORAILS PROJECT

MATERIAL LIST FOR ASSEMBLY MK'D Z16-HR004

Mark	Profile	GRADE	No.	Length	Area	Weight
Z16-HR004	CHS48.3*4.0	S235JR	1	1927	0.29	8.43
W748	ROD32	S235JR	1	100	0.01	0.60
W828	CHS48.3*4.0	S235JR	1	301	0.05	1.32
W845	PL3*45	S355JR	1	45	0.00	0.03
W871	CHS48.3*4.0	S235JR	1	64	0.01	0.28
				Total	0.36	10.66

BOLT LIST:-

BOLT \ STUD	BOLT DESCRIPTION	QTY	FINISH

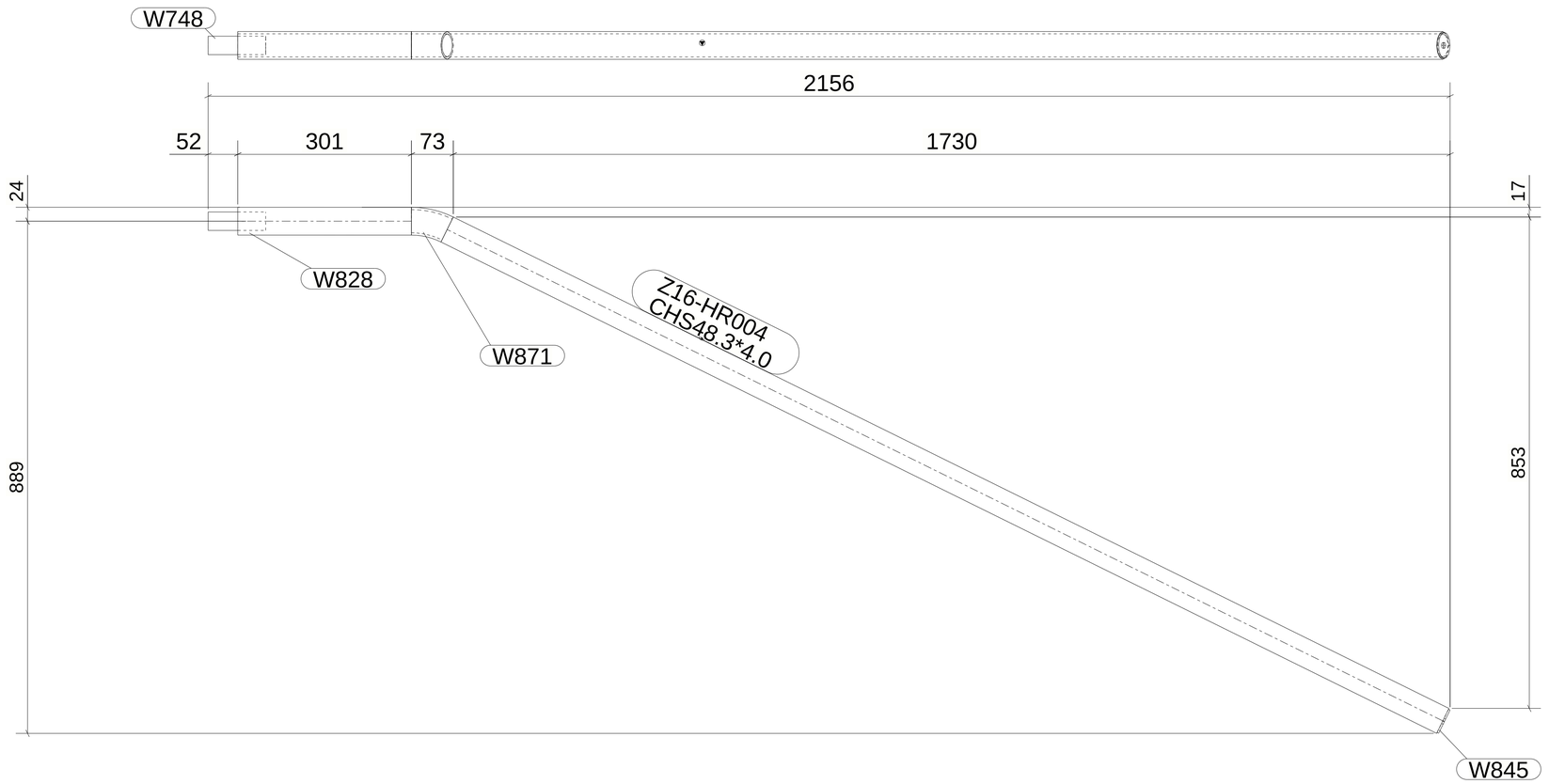

1 *REQUIRED AS DRAWN MARKED* Z16-HR004

6 October Monorail
Engineering Unit
Valid For Construction

GENERAL NOTES:

1. THE DIMENSIONS SHOWN ARE NOMINAL (IN MILLIMETERS), U.N.O.
2. WELD SIZESHALL BE AISC MINIMUM OF 6 mm UNLESS NOTED OTHERWISE.
3. ALL FIELD WELDS SHALL BE INSPECTED PER QUALITY ASSURANCE AND SPECIAL INSPECTIONS.

REFERENCE DRAWINGS

1	93M-BOA-NAT-LOT-04833
2	93M-BOA-NAT-LOT-09170
3	93M-BOA-NAT-LOT-01976
4	93M-BOA-NAT-LOT-20021
5	
6	
7	
8	
9	

6TH OF OCTOBER CITY RAIL TRANSIT MONORAIL

The Authority | Consultant: Hill International | Main Contractor: ORASCOM / BOMBARDIER | Structural Designer: INNOVA

KEY PLAN:

SCALE: AS SHOWN | SHOPDRAWING | DATE: 08/29/2023

REV	DATE	DSG.	CHK.	APP.	AMENDMENTS	STATUS
B	08/29/2023	M.KH	M.KH	DR.M.M	ISSUED FOR INFORMATION	IFI
A	09/21/2022	M.KH	M.KH	DR.M.M	ISSUED FOR INFORMATION	IFI

DRAWING TITLE
6TH OF OCTOBER MONORAIL
SERVICE WALKWAYS
ZONE(1016)
Z16-HR004

Project Code	Rubric	Initiator	Lot	Ref	Number	Revision
93M	047	ACC	60DEP	DWG	16131	B

Tekla structures

Approval is subject to approval of coordination package between multi-discipline.

REVIEWED WITH COMMENT
MONORAILS PROJECT

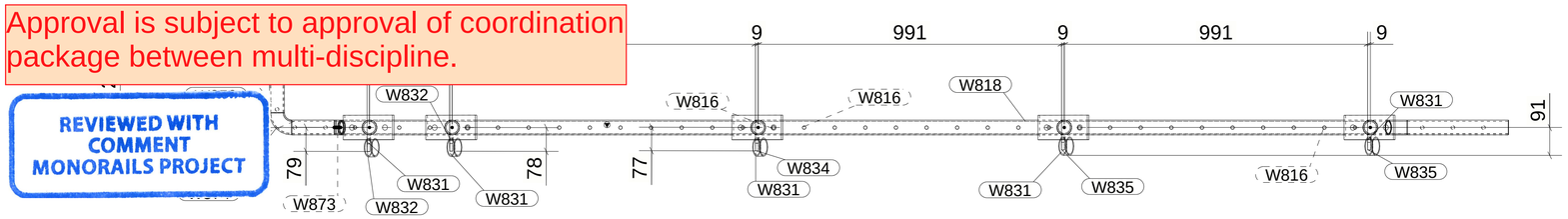

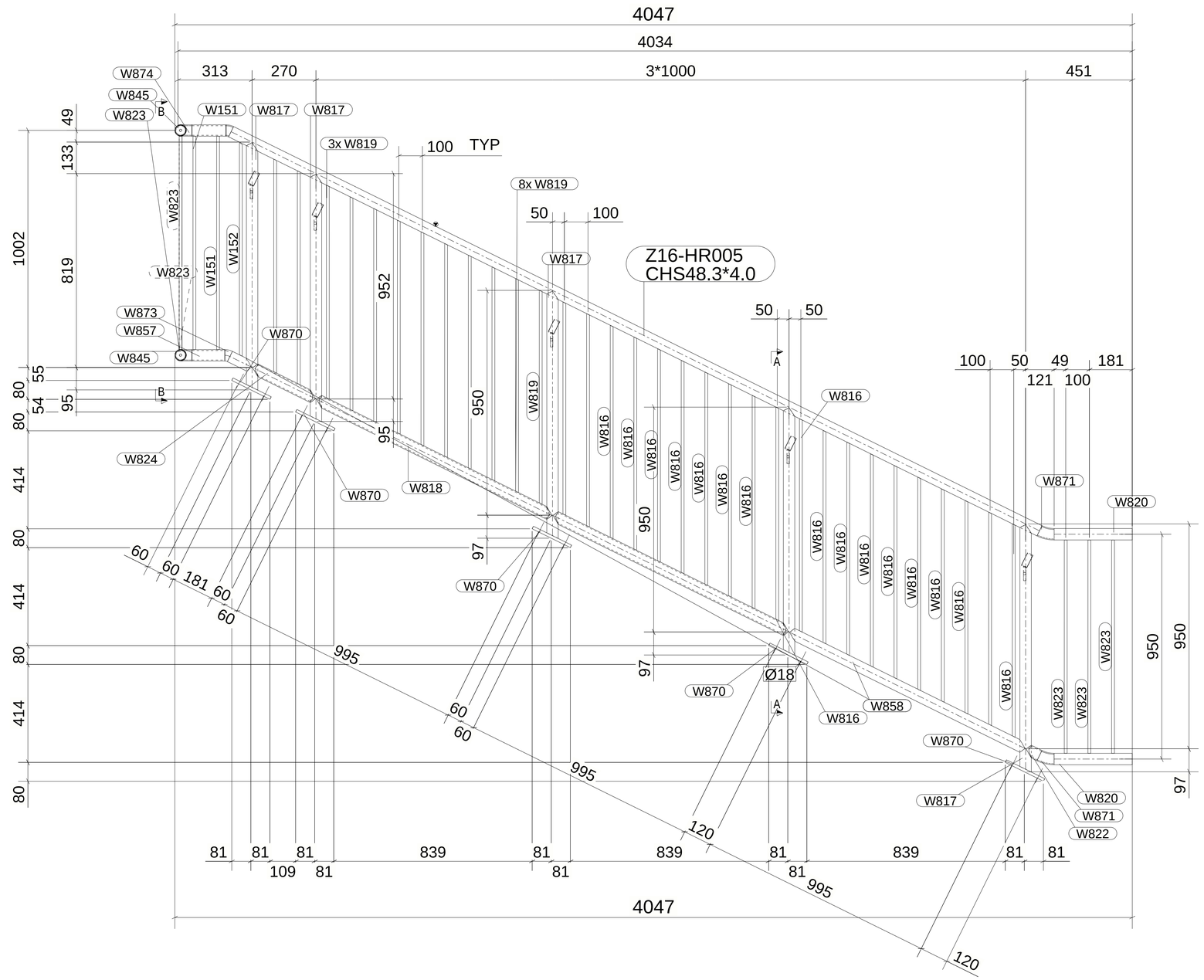
4047
4034
313
270
3*1000
451
W874
W845
W823
B
W151
W817
W817
3x W819
100 TYP
8x W819
50
100
W817
Z16-HR005
CHS48.3*4.0
W823
W151
W152
W823
W873
W857
W845
W870
W824
W870
W818
W819
W816
W816
W816

Approval is subject to approval of coordination package between multi-discipline.

REVIEWED WITH COMMENT
MONORAILS PROJECT

MATERIAL LIST FOR ASSEMBLY MK'D Z16-HR023

Mark	Profile	GRADE	No.	Length	Area	Weight
Z16-HR023	CHS48.3*4.0	S235JR	1	2216	0.33	9.69
W756	ROD32	S235JR	2	100	0.01	0.60
				Total	0.36	10.89

BOLT LIST:-

BOLT \ STUD	BOLT DESCRIPTION	QTY	FINISH

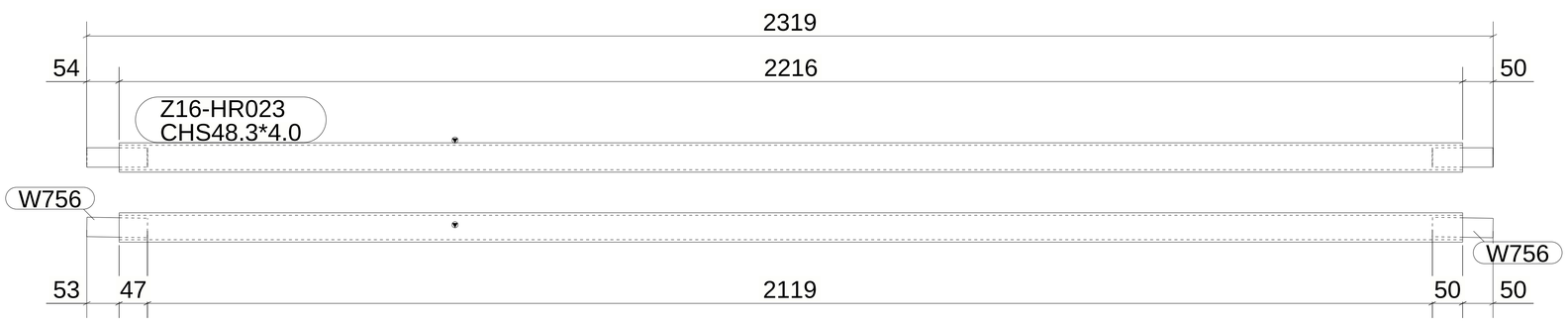

1 *REQUIRED AS DRAWN MARKED* Z16-HR023

6 October Monorail
Engineering Unit
Valid For Construction

GENERAL NOTES:

1. THE DIMENSIONS SHOWN ARE NOMINAL (IN MILLIMETERS), U.N.O.
2. WELD SIZESHALL BE AISC MINIMUM OF 6 mm UNLESS NOTED OTHERWISE.
3. ALL FIELD WELDS SHALL BE INSPECTED PER QUALITY ASSURANCE AND SPECIAL INSPECTIONS.

REFERENCE DRAWINGS

1	93M-BOA-NAT-LOT-04833
2	93M-BOA-NAT-LOT-09170
3	93M-BOA-NAT-LOT-01976
4	93M-BOA-NAT-LOT-20021
5	
6	
7	
8	
9	

6TH OF OCTOBER CITY RAIL TRANSIT MONORAIL

The Authority — Hill International Consultant — Main Contractor — Structural Designer

KEY PLAN:

SCALE: AS SHOWN | SHOP DRAWING | DATE: 08/29/2023

REV	DATE	DSG.	CHK.	APP.	AMENDMENTS	STATUS
B	08/29/2023	M.KH	M.KH	DR.M.M	ISSUED FOR INFORMATION	IFI
A	09/21/2022	M.KH	M.KH	DR.M.M	ISSUED FOR INFORMATION	IFI

DRAWING TITLE
6TH OF OCTOBER MONORAIL
SERVICE WALKWAYS
ZONE(1016)
Z16-HR023

Project Code	Rubric	Initiator	Lot	Ref	Number	Revision
9 3	M 0 4 7 6	A C C	6 0	D E P	D W G	1 6 1 3 3	B

Tekla structures

Approval is subject to approval of coordination package between multi-discipline.

REVIEWED WITH COMMENT
MONORAILS PROJECT

MATERIAL LIST FOR ASSEMBLY MK'D Z16-HR007

Mark	Profile	GRADE	No.	Length	Area	Weight
Z16-HR007	CHS48.3*4.0	S235JR	1	2997	0.45	13.11
W748	ROD32	S235JR	1	100	0.01	0.60
				Total	0.46	13.71

BOLT LIST:-

BOLT \ STUD	BOLT DESCRIPTION	QTY	FINISH

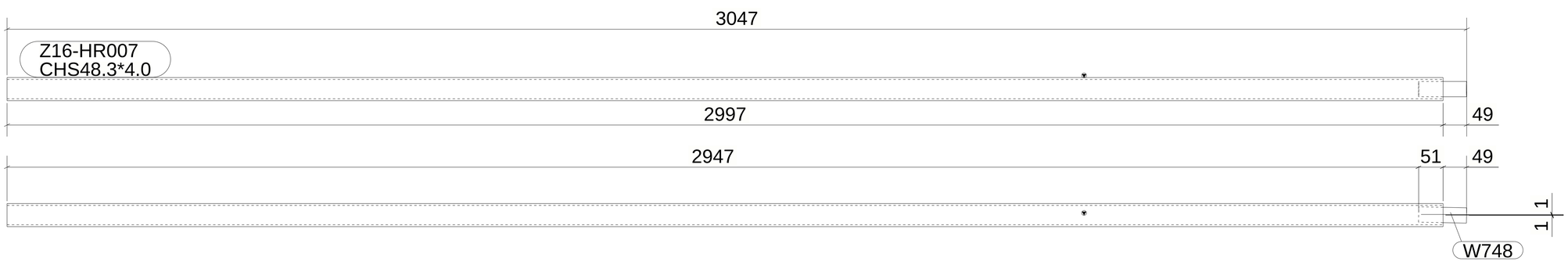

1 *REQUIRED AS DRAWN MARKED* Z16-HR007

6 October Monorail
Engineering Unit
Valid For Construction

GENERAL NOTES:

1. THE DIMENSIONS SHOWN ARE NOMINAL (IN MILLIMETERS), U.N.O.
2. WELD SIZESHALL BE AISC MINIMUM OF 6 mm UNLESS NOTED OTHERWISE.
3. ALL FIELD WELDS SHALL BE INSPECTED PER QUALITY ASSURANCE AND SPECIAL INSPECTIONS.

REFERENCE DRAWINGS

1	93M-BOA-NAT-LOT-04833
2	93M-BOA-NAT-LOT-09170
3	93M-BOA-NAT-LOT-01976
4	93M-BOA-NAT-LOT-20021
5	
6	
7	
8	
9	

6TH OF OCTOBER CITY RAIL TRANSIT MONORAIL

The Authority — Hill International Consultant — Main Contractor — Structural Designer

KEY PLAN:

SCALE: AS SHOWN | SHOP DRAWING | DATE: 08/29/2023

REV	DATE	DSG.	CHK.	APP.	AMENDMENTS	STATUS
B	08/29/2023	M.KH	M.KH	DR.M.M	ISSUED FOR INFORMATION	IFI
A	09/21/2022	M.KH	M.KH	DR.M.M	ISSUED FOR INFORMATION	IFI

DRAWING TITLE
6TH OF OCTOBER MONORAIL
SERVICE WALKWAYS
ZONE(1016)
Z16-HR007

Project Code	Rubric	Initiator	Lot	Ref	Number	Revision
9 3	M 0 4 7 6	A C C	6 0 D E P	D W G	1 6 1 3 4	B

Tekla structures

Approval is subject to approval of coordination package between multi-discipline.

REVIEWED WITH COMMENT
MONORAILS PROJECT

MATERIAL LIST FOR ASSEMBLY MK'D Z16-HR026

Mark	Profile	GRADE	No.	Length	Area	Weight
Z16-HR026	CHS48.3*4.0	S235JR	1	4997	0.75	21.85
W756	ROD32	S235JR	1	100	0.01	0.60
				Total	0.76	22.45

BOLT LIST:-

BOLT \ STUD	BOLT DESCRIPTION	QTY	FINISH

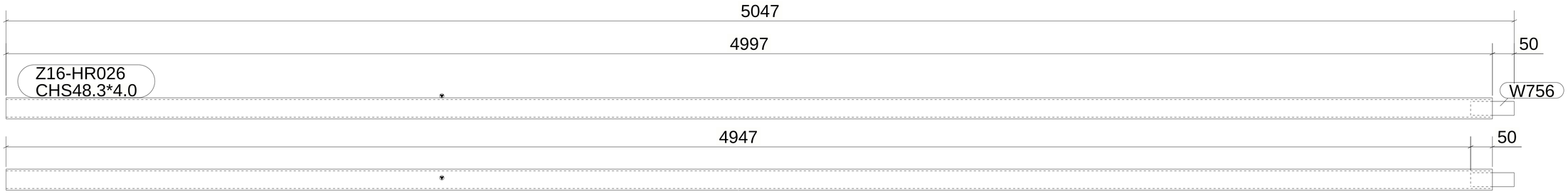

1 *REQUIRED AS DRAWN MARKED* Z16-HR026

GENERAL NOTES:

1. THE DIMENSIONS SHOWN ARE NOMINAL (IN MILLIMETERS), U.N.O.
2. WELD SIZESHALL BE AISC MINIMUM OF 6 mm UNLESS NOTED OTHERWISE.
3. ALL FIELD WELDS SHALL BE INSPECTED PER QUALITY ASSURANCE AND SPECIAL INSPECTIONS.

REFERENCE DRAWINGS

1	93M-BOA-NAT-LOT-04833
2	93M-BOA-NAT-LOT-09170
3	93M-BOA-NAT-LOT-01976
4	93M-BOA-NAT-LOT-20021
5	
6	
7	
8	
9	

6TH OF OCTOBER CITY RAIL TRANSIT MONORAIL

The Authority — Consultant: Hill International — Main Contractor — Structural Designer

6 October Monorail
Engineering Unit
Valid For Construction

KEY PLAN:

SCALE: AS SHOWN | SHOP DRAWING | DATE: 08/29/2023

REV	DATE	DSG.	CHK.	APP.	AMENDMENTS	STATUS
B	08/29/2023	M.KH	M.KH	DR.M.M	ISSUED FOR INFORMATION	IFI
A	09/21/2022	M.KH	M.KH	DR.M.M	ISSUED FOR INFORMATION	IFI

DRAWING TITLE
6TH OF OCTOBER MONORAIL
SERVICE WALKWAYS
ZONE(1016)
Z16-HR026

Project Code	Rubric	Initiator	Lot	Ref	Number	Revision
93M	0476	ACC	60DEP	DWG	16135	B

Trekla structures

Approval is subject to approval of coordination package between multi-discipline.

REVIEWED WITH COMMENT MONORAILS PROJECT

MATERIAL LIST FOR ASSEMBLY MK'D Z16-HR038

Mark	Profile	GRADE	No.	Length	Area	Weight
Z16-HR038	CHS48.3*4.0	S235JR	1	6644	1.00	29.05
W845	PL3*45	S355JR	1	45	0.00	0.03
				Total	1.00	29.09

BOLT LIST:-

BOLT \ STUD	BOLT DESCRIPTION	QTY	FINISH

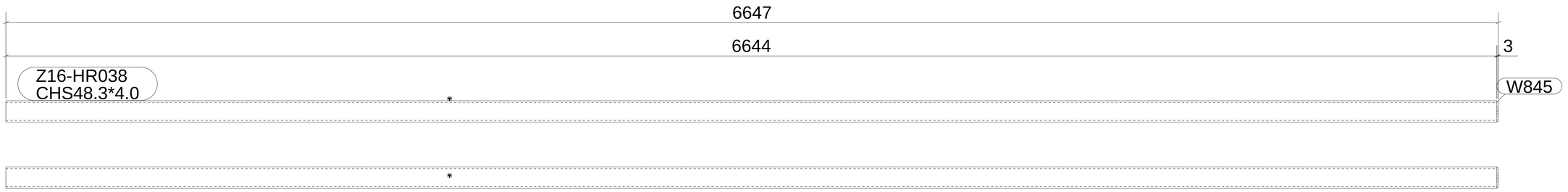

1 *REQUIRED AS DRAWN MARKED* Z16-HR038

6 October Monorail Engineering Unit
Valid For Construction

GENERAL NOTES:

1. THE DIMENSIONS SHOWN ARE NOMINAL (IN MILLIMETERS), U.N.O.
2. WELD SIZESHALL BE AISC MINIMUM OF 6 mm UNLESS NOTED OTHERWISE.
3. ALL FIELD WELDS SHALL BE INSPECTED PER QUALITY ASSURANCE AND SPECIAL INSPECTIONS.

REFERENCE DRAWINGS

1	93M-BOA-NAT-LOT-04833
2	93M-BOA-NAT-LOT-09170
3	93M-BOA-NAT-LOT-01976
4	93M-BOA-NAT-LOT-20021
5	
6	
7	
8	
9	

6TH OF OCTOBER CITY RAIL TRANSIT MONORAIL

The Authority | Hill International Consultant | ORASCOM BOMBARDIER Main Contractor | INNOVA TRANSPORTATION Structural Designer

KEY PLAN:

SCALE: AS SHOWN | SHOPDRAWING | DATE: 08/29/2023

REV	DATE	DSG.	CHK.	APP.	AMENDMENTS	STATUS
B	08/29/2023	M.KH	M.KH	DR.M.M	ISSUED FOR INFORMATION	IFI
A	09/21/2022	M.KH	M.KH	DR.M.M	ISSUED FOR INFORMATION	IFI

DRAWING TITLE
6TH OF OCTOBER MONORAIL SERVICE WALKWAYS ZONE(1016)
Z16-HR038

Project Code	Rubric	Initiator	Lot	Ref	Number	Revision
93M	0476	ACC	60DEP	DWG	16136	B

Tekla structures

Approval is subject to approval of coordination package between multi-discipline.

REVIEWED WITH COMMENT
MONORAILS PROJECT

MATERIAL LIST FOR ASSEMBLY MK'D Z16-HR025

Mark	Profile	GRADE	No.	Length	Area	Weight
Z16-HR025	CHS48.3*4.0	S235JR	1	5967	0.90	26.09
W756	ROD32	S235JR	1	100	0.01	0.60
				Total	0.91	26.69

BOLT LIST:-

BOLT \ STUD	BOLT DESCRIPTION	QTY	FINISH

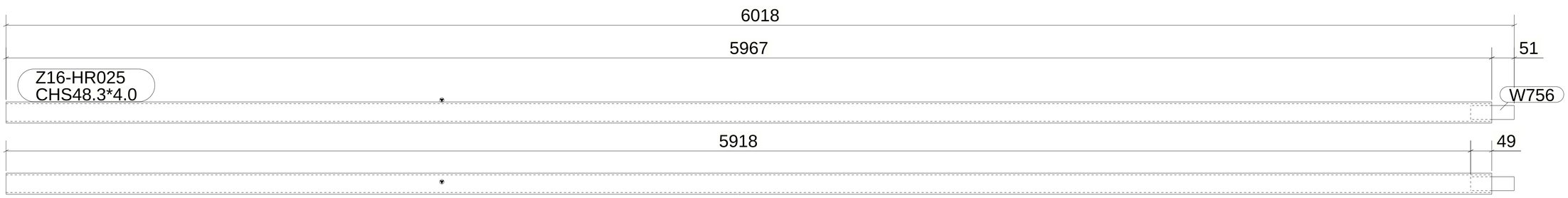

1 *REQUIRED AS DRAWN MARKED* Z16-HR025

GENERAL NOTES:

1. THE DIMENSIONS SHOWN ARE NOMINAL (IN MILLIMETERS), U.N.O.
2. WELD SIZESHALL BE AISC MINIMUM OF 6 mm UNLESS NOTED OTHERWISE.
3. ALL FIELD WELDS SHALL BE INSPECTED PER QUALITY ASSURANCE AND SPECIAL INSPECTIONS.

REFERENCE DRAWINGS

1	93M-BOA-NAT-LOT-04833
2	93M-BOA-NAT-LOT-09170
3	93M-BOA-NAT-LOT-01976
4	93M-BOA-NAT-LOT-20021
5	
6	
7	
8	
9	

6TH OF OCTOBER CITY RAIL TRANSIT MONORAIL

The Authority | Hill International Consultant | Main Contractor | Structural Designer

KEY PLAN:

6 October Monorail
Engineering Unit
Valid For Construction

SCALE: AS SHOWN | SHOP DRAWING | DATE: 08/29/2023

REV	DATE	DSG.	CHK.	APP.	AMENDMENTS	STATUS
B	08/29/2023	M.KH	M.KH	DR.M.M	ISSUED FOR INFORMATION	IFI
A	09/21/2022	M.KH	M.KH	DR.M.M	ISSUED FOR INFORMATION	IFI

DRAWING TITLE
6TH OF OCTOBER MONORAIL
SERVICE WALKWAYS
ZONE(1016)
Z16-HR025

Project Code	Rubric	Initiator	Lot	Ref	Number	Revision
93M	0476	ACC	60DEP	DWG	16137	B

Tekla structures

Please review the dimensions and level of stair with the site before starting fabrication.

REVIEWED WITH COMMENT
MONORAILS PROJECT

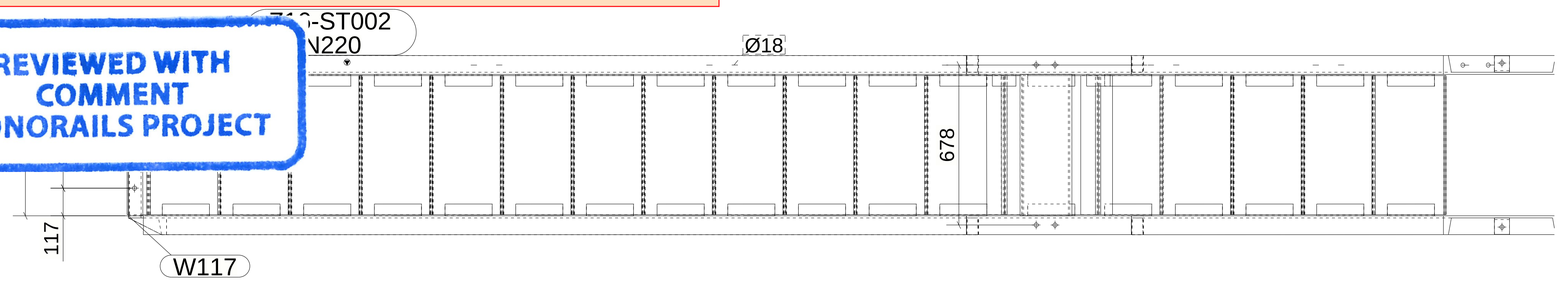

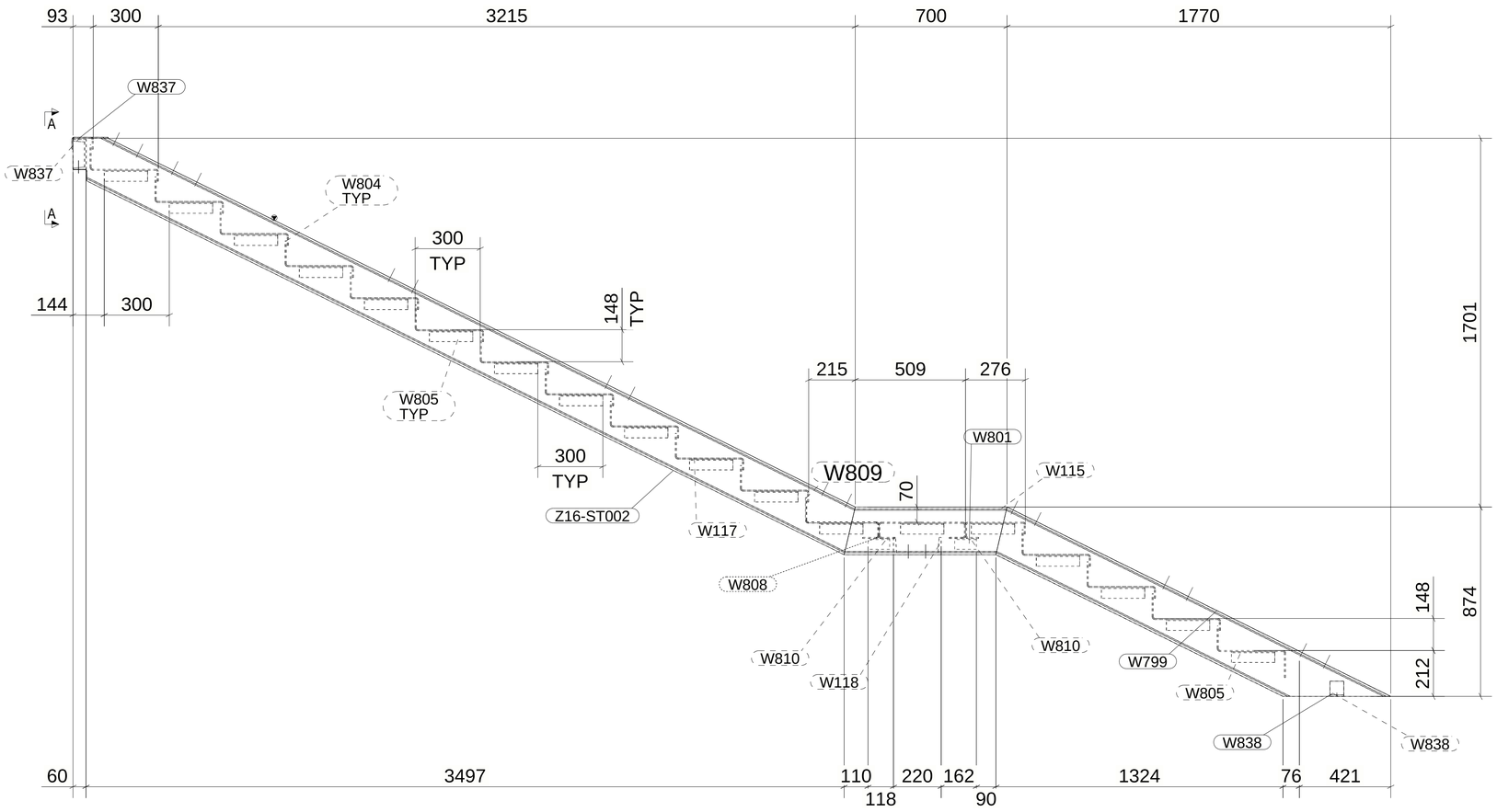

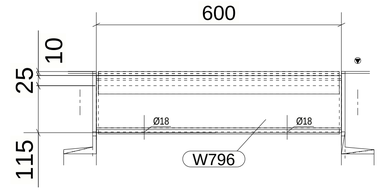

A - A

MATERIAL LIST FOR ASSEMBLY MK'D Z16-ST002

Mark	Profile	GRADE	No.	Length	Area	Weight
Z16-ST002	UPN220	S235JR	1	4040	2.91	118.61
W114	UPN220	S235JR	1	1974	1.42	57.95
W115	UPN220	S235JR	1	751	0.54	22.06
W117	UPN220	S235JR	1	4040	2.91	118.61
W118	UPN220	S235JR	1	600	0.43	17.62
W796	UPN140	S235JR	1	600	0.29	9.61
W798	CHQD_PL5*192.1	S235JR	1	590	0.23	4.41
W799	UPN220	S235JR	1	1974	1.42	57.95
W801	UPN220	S235JR	1	751	0.54	22.06
W803	CHQD_PL5*540	S235JR	1	590	0.65	12.47
W804	CHQD_PL5*470	S235JR	13	590	0.56	10.85
W805	L50*5	S235JR	36	200	0.04	0.75
W806	CHQD_PL5*590	S235JR	1	663	0.79	15.13
W807	CHQD_PL5*469.8	S235JR	1	590	0.56	10.85
W808	CHQD_PL5*440.7	S235JR	1	590	0.53	10.17
W809	CHQD_PL5*578.7	S235JR	1	590	0.69	13.35
W810	L50*5	S235JR	2	100	0.02	0.37
W837	PL5*80	S355JR	2	162	0.02	0.31
W838	L70*7	S235JR	2	64	0.02	0.47
				Total	22.87	661.07

BOLT LIST:-

BOLT \ STUD	BOLT DESCRIPTION		QTY	FINISH
BOLT	B1N2W16 X 50	A325M	2	
BOLT	B1N2W16 X 55	A325M	4	

1 *REQUIRED AS DRAWN MARKED* Z16-ST002

GENERAL NOTES:

1. THE DIMENSIONS SHOWN ARE NOMINAL (IN MILLIMETERS), U.N.O.
2. WELD SIZESHALL BE AISC MINIMUM OF 6 mm UNLESS NOTED OTHERWISE.
3. ALL FIELD WELDS SHALL BE INSPECTED PER QUALITY ASSURANCE AND SPECIAL INSPECTIONS.

REFERENCE DRAWINGS

1	93M-BOA-NAT-LOT-04833
2	93M-BOA-NAT-LOT-09170
3	93M-BOA-NAT-LOT-01976
4	93M-BOA-NAT-LOT-20021
5	
6	
7	
8	
9	

6TH OF OCTOBER CITY RAIL TRANSIT MONORAIL

The Authority | Consultant: Hill International | Main Contractor: ORASCOM CONSTRUCTION / BOMBARDIER | Structural Designer: INNOVA TRANSPORTATION

6 October Monorail
Engineering Unit
Valid For Construction

KEY PLAN:

SCALE: AS SHOWN | SHOP DRAWING | DATE: 08/29/2023

REV	DATE	DSG.	CHK.	APP.	AMENDMENTS	STATUS
B	08/29/2023	M.KH	M.KH	DR.M.M	ISSUED FOR INFORMATION	IFI
A	09/21/2022	M.KH	M.KH	DR.M.M	ISSUED FOR INFORMATION	IFI

DRAWING TITLE
6TH OF OCTOBER MONORAIL
SERVICE WALKWAYS
ZONE(1016)
Z16-ST002

Project Code	Rubric	Initiator	Lot	Ref	Number	Revision
93M	047	ACC	60DEP	DWG	1613	B

Tekla structures

Please review the dimensions and level of stair with the site before starting fabrication.

REVIEWED WITH COMMENT MONORAILS PROJECT

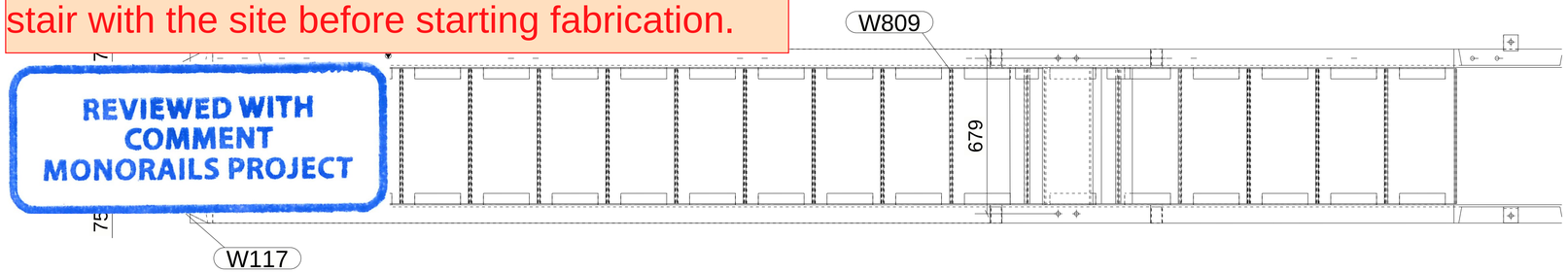

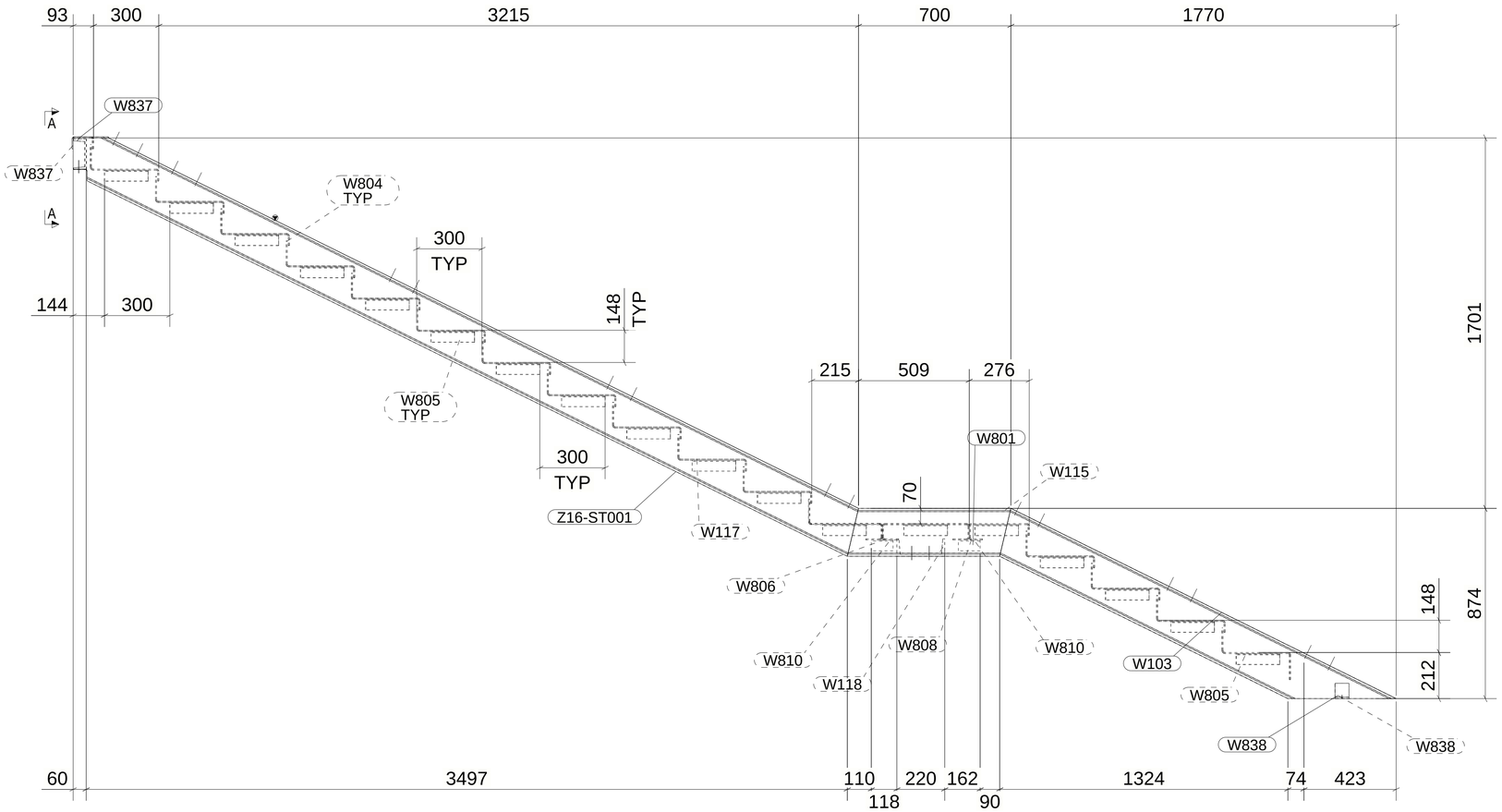

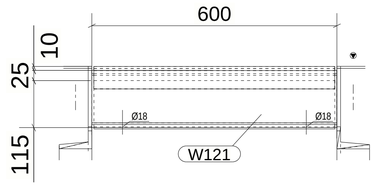

A - A

MATERIAL LIST FOR ASSEMBLY MK'D Z16-ST001

Mark	Profile	GRADE	No.	Length	Area	Weight
Z16-ST001	UPN220	S235JR	1	4040	2.91	118.61
W103	UPN220	S235JR	1	1974	1.42	57.95
W114	UPN220	S235JR	1	1974	1.42	57.95
W115	UPN220	S235JR	1	751	0.54	22.06
W117	UPN220	S235JR	1	4040	2.91	118.61
W118	UPN220	S235JR	1	600	0.43	17.62
W121	UPN140	S235JR	1	600	0.29	9.61
W798	CHQD_PL5*192.1	S235JR	1	590	0.23	4.41
W801	UPN220	S235JR	1	751	0.54	22.06
W803	CHQD_PL5*540	S235JR	1	590	0.65	12.47
W804	CHQD_PL5*470	S235JR	13	590	0.56	10.85
W805	L50*5	S235JR	36	200	0.04	0.75
W806	CHQD_PL5*590	S235JR	1	663	0.79	15.13
W807	CHQD_PL5*469.8	S235JR	1	590	0.56	10.85
W808	CHQD_PL5*440.7	S235JR	1	590	0.53	10.17
W809	CHQD_PL5*578.7	S235JR	1	590	0.69	13.35
W810	L50*5	S235JR	2	100	0.02	0.37
W837	PL5*80	S355JR	2	162	0.02	0.31
W838	L70*7	S235JR	2	64	0.02	0.47
				Total	22.87	661.07

BOLT LIST:-

BOLT \ STUD	BOLT DESCRIPTION		QTY	FINISH
BOLT	B1N2W16 X 50	A325M	2	
BOLT	B1N2W16 X 55	A325M	4	

6 October Monorail Engineering Unit Valid For Construction

1 *REQUIRED AS DRAWN MARKED* Z16-ST001

GENERAL NOTES:

1. THE DIMENSIONS SHOWN ARE NOMINAL (IN MILLIMETERS), U.N.O.
2. WELD SIZESHALL BE AISC MINIMUM OF 6 mm UNLESS NOTED OTHERWISE.
3. ALL FIELD WELDS SHALL BE INSPECTED PER QUALITY ASSURANCE AND SPECIAL INSPECTIONS.

REFERENCE DRAWINGS

1	93M-BOA-NAT-LOT-04833
2	93M-BOA-NAT-LOT-09170
3	93M-BOA-NAT-LOT-01976
4	93M-BOA-NAT-LOT-20021
5	
6	
7	
8	
9	

6TH OF OCTOBER CITY RAIL TRANSIT MONORAIL

The Authority | Hill International Consultant | ORASCOM BOMBARDIER Main Contractor | INNOVA TRANSPORTATION Structural Designer

KEY PLAN:

SCALE AS SHOWN | SHOPDRAWING | DATE 08/29/2023

REV	DATE	DSG.	CHK.	APP.	AMENDMENTS	STATUS
B	08/29/2023	M.KH	M.KH	DR.M.M	ISSUED FOR INFORMATION	IFI
A	09/21/2022	M.KH	M.KH	DR.M.M	ISSUED FOR INFORMATION	IFI

DRAWING TITLE
6TH OF OCTOBER MONORAIL SERVICE WALKWAYS ZONE(1016)
Z16-ST001

Project Code	Rubric	Initiator	Lot	Ref	Number	Revision
93M	0476	ACC	60DEP	DWG	16139	B

Tekla structures

Approval is subject to approval of coordination package between multi-discipline.

REVIEWED WITH COMMENT
MONORAILS PROJECT

Length & Area & Weight per piece						
Z17-BR003	L80*8	S235JR	1	3463.9	1.11	33.1
Mark	Profile	Grade	QTY	Length	Area	Weight

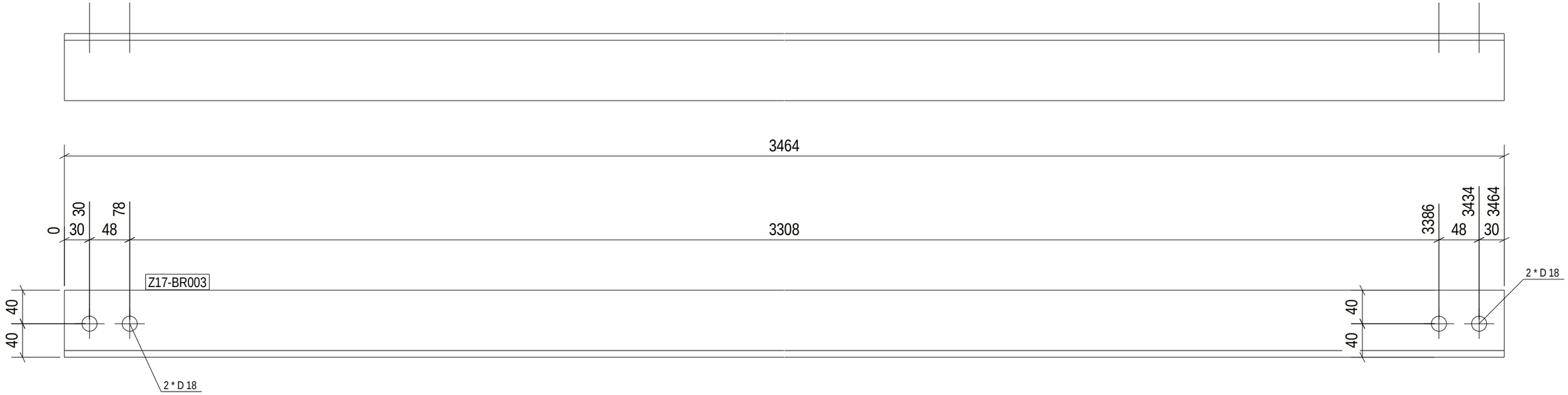

1 REQ'D AS DRAWN MK'D Z17-BR003

6 October: Monorail
Engineering Unit
Valid For Construction

GENERAL NOTES:

1. THE DIMENSIONS SHOWN ARE NOMINAL (IN MILLIMETERS), U.N.O.
2. WELD SIZESHALL BE AISC MINIMUM OF 6 mm UNLESS NOTED OTHERWISE.
3. ALL FIELD WELDS SHALL BE INSPECTED PER QUALITY ASSURANCE AND SPECIAL INSPECTIONS.

REFERENCE DRAWINGS

1	93M-BOA-NAT-LOT-04833
2	93M-BOA-NAT-LOT-09170
3	93M-BOA-NAT-LOT-01976
4	93M-BOA-NAT-LOT-20021
5	
6	
7	
8	
9	

6TH OF OCTOBER CITY RAIL TRANSIT MONORAIL

The Authority | Hill International Consultant | ORASCOM CONSTRUCTION BOMBARDIER Main Contractor | INNOVA TRANSPORTATION Structural Designer

KEY PLAN:

SCALE: AS SHOWN | SHOPDRAWING | DATE: 09/29/2023

REV	DATE	DSG.	CHK.	APP.	AMENDMENTS	STATUS
B	08/29/2023	M.KH	M.KH	DR.M.M	ISSUED FOR INFORMATION	IFI
A	09/21/2022	M.KH	M.KH	DR.M.M	ISSUED FOR INFORMATION	IFI

DRAWING TITLE
6TH OF OCTOBER MONORAIL
SERVICE WALKWAYS
ZONE(1016)
Z17-BR003

Project Code	Rubric	Initiator	Lot	Ref	Number	Revision
93M	047	6ACC	60DE	P	DWG	16140	B

Tekla structures

Approval is subject to approval of coordination package between multi-discipline.

REVIEWED WITH COMMENT MONORAILS PROJECT

Length & Area & Weight per piece						
Z16-ST002	UPN220	S235JR	1	4040.0	2.91	118.6
Mark	Profile	Grade	QTY	Length	Area	Weight

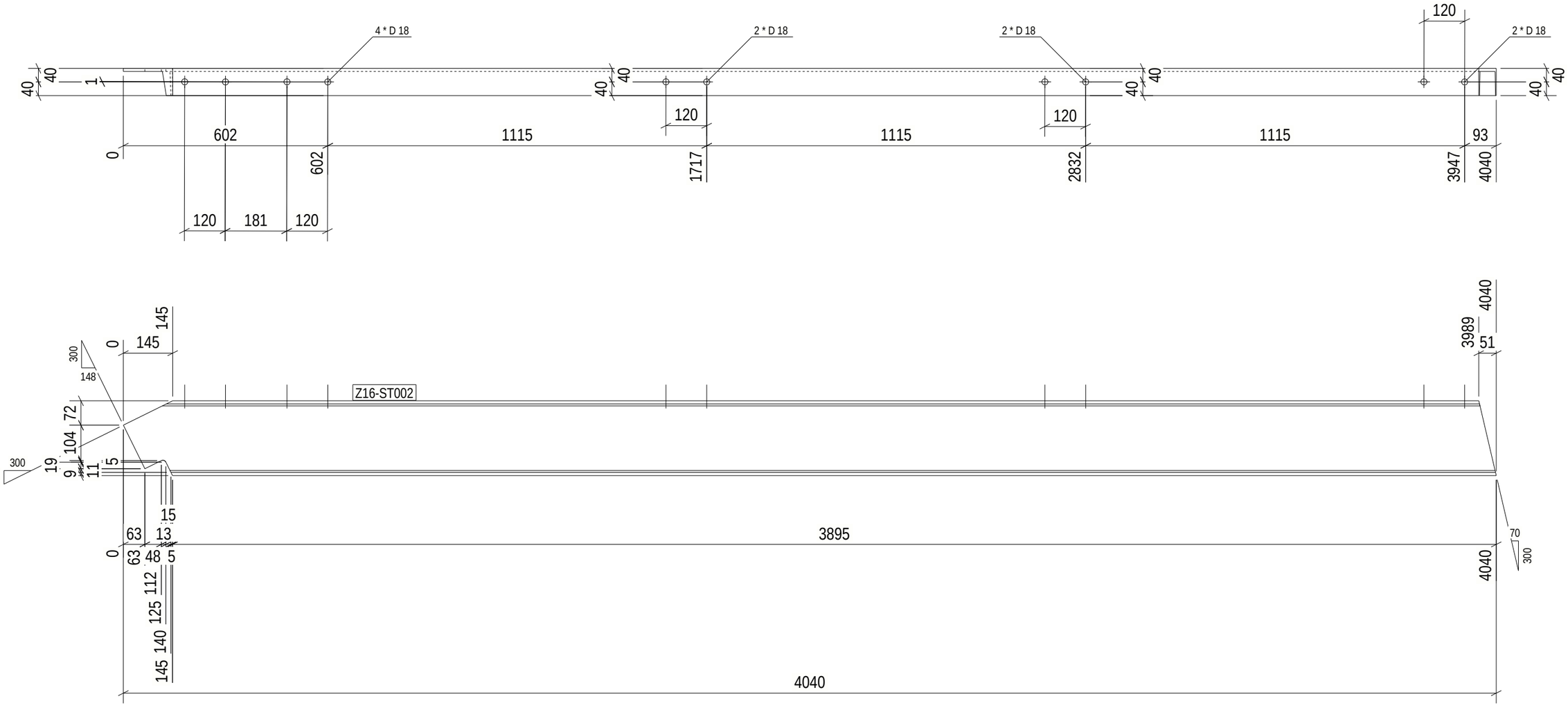

1 REQ'D AS DRAWN MK'D Z16-ST002

6 October Monorail Engineering Unit Valid For Construction

GENERAL NOTES:

1. THE DIMENSIONS SHOWN ARE NOMINAL (IN MILLIMETERS), U.N.O.
2. WELD SIZESHALL BE AISC MINIMUM OF 6 mm UNLESS NOTED OTHERWISE.
3. ALL FIELD WELDS SHALL BE INSPECTED PER QUALITY ASSURANCE AND SPECIAL INSPECTIONS.

REFERENCE DRAWINGS

1	93M-BOA-NAT-LOT-04833
2	93M-BOA-NAT-LOT-09170
3	93M-BOA-NAT-LOT-01976
4	93M-BOA-NAT-LOT-20021
5	
6	
7	
8	
9	

6TH OF OCTOBER CITY RAIL TRANSIT MONORAIL

The Authority | Hill International Consultant | ORASCOM BOMBARDIER Main Contractor | INNOVA Structural Designer

KEY PLAN:

SCALE	SHOPDRAWING	DATE
AS SHOWN		09/29/2023

REV	DATE	DSG.	CHK.	APP.	AMENDMENTS	STATUS
B	08/29/2023	M.KH	M.KH	DR.M.M	ISSUED FOR INFORMATION	IFI
A	09/21/2022	M.KH	M.KH	DR.M.M	ISSUED FOR INFORMATION	IFI

DRAWING TITLE

6TH OF OCTOBER MONORAIL SERVICE WALKWAYS ZONE(1016)
Z16-ST002

Project Code	Rubric	Initiator	Lot	Ref	Number	Revision
93M	0476	ACC	60DEP	DWG	16141	B

Tekla structures

Approval is subject to approval of coordination package between multi-discipline.

REVIEWED WITH COMMENT
MONORAILS PROJECT

Length & Area & Weight per piece						
Z16-ST001	UPN220	S235JR	1	4040.0	2.91	118.6
Mark	Profile	Grade	QTY	Length	Area	Weight

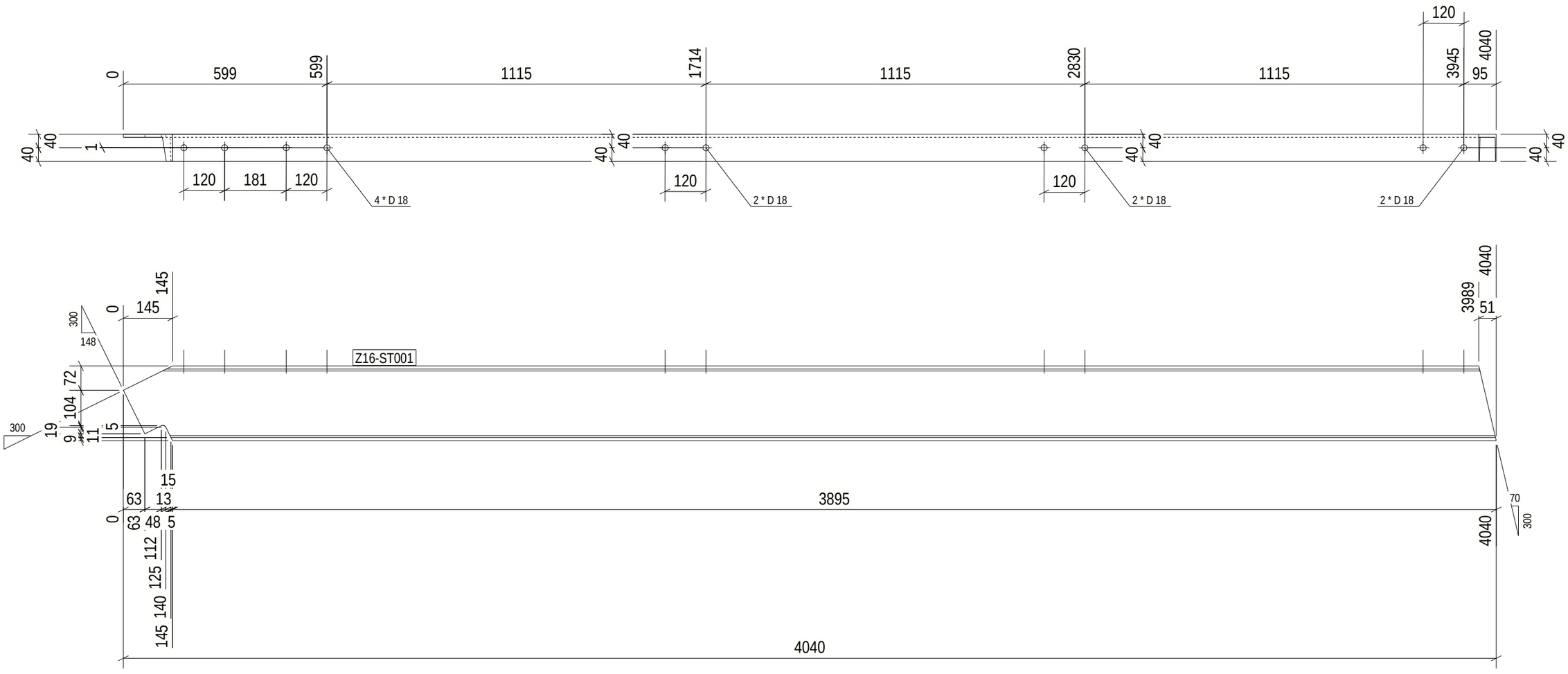

1 REQ'D AS DRAWN MK'D Z16-ST001

6 October Monorail
Engineering Unit
Valid For Construction

GENERAL NOTES:

1. THE DIMENSIONS SHOWN ARE NOMINAL (IN MILLIMETERS), U.N.O.
2. WELD SIZESHALL BE AISC MINIMUM OF 6 mm UNLESS NOTED OTHERWISE.
3. ALL FIELD WELDS SHALL BE INSPECTED PER QUALITY ASSURANCE AND SPECIAL INSPECTIONS.

REFERENCE DRAWINGS

1	93M-BOA-NAT-LOT-04833
2	93M-BOA-NAT-LOT-09170
3	93M-BOA-NAT-LOT-01976
4	93M-BOA-NAT-LOT-20021
5	
6	
7	
8	
9	

6TH OF OCTOBER CITY RAIL TRANSIT MONORAIL

The Authority | Hill International Consultant | Main Contractor | Structural Designer

KEY PLAN:

SCALE	SHOPDRAWING	DATE
AS SHOWN		09/29/2023

REV.	DATE	DSG.	CHK.	APP.	AMENDMENTS	STATUS
B	08/29/2023	M.KH	M.KH	DR.M.M	ISSUED FOR INFORMATION	IFI
A	09/21/2022	M.KH	M.KH	DR.M.M	ISSUED FOR INFORMATION	IFI

DRAWING TITLE

6TH OF OCTOBER MONORAIL
SERVICE WALKWAYS
ZONE(1016)
Z16-ST001

Project Code	Rubric	Initiator	Lot	Ref	Number	Revision
93	M047	ACC60	DEP	DWG	1612	B

Tekla structures

Approval is subject to approval of coordination package between multi-discipline.

REVIEWED WITH COMMENT MONORAILS PROJECT

Length & Area & Weight per piece						
Z16-PO007	L70*7	S235JR	1	1181.1	0.33	8.6
Mark	Profile	Grade	QTY	Length	Area	Weight

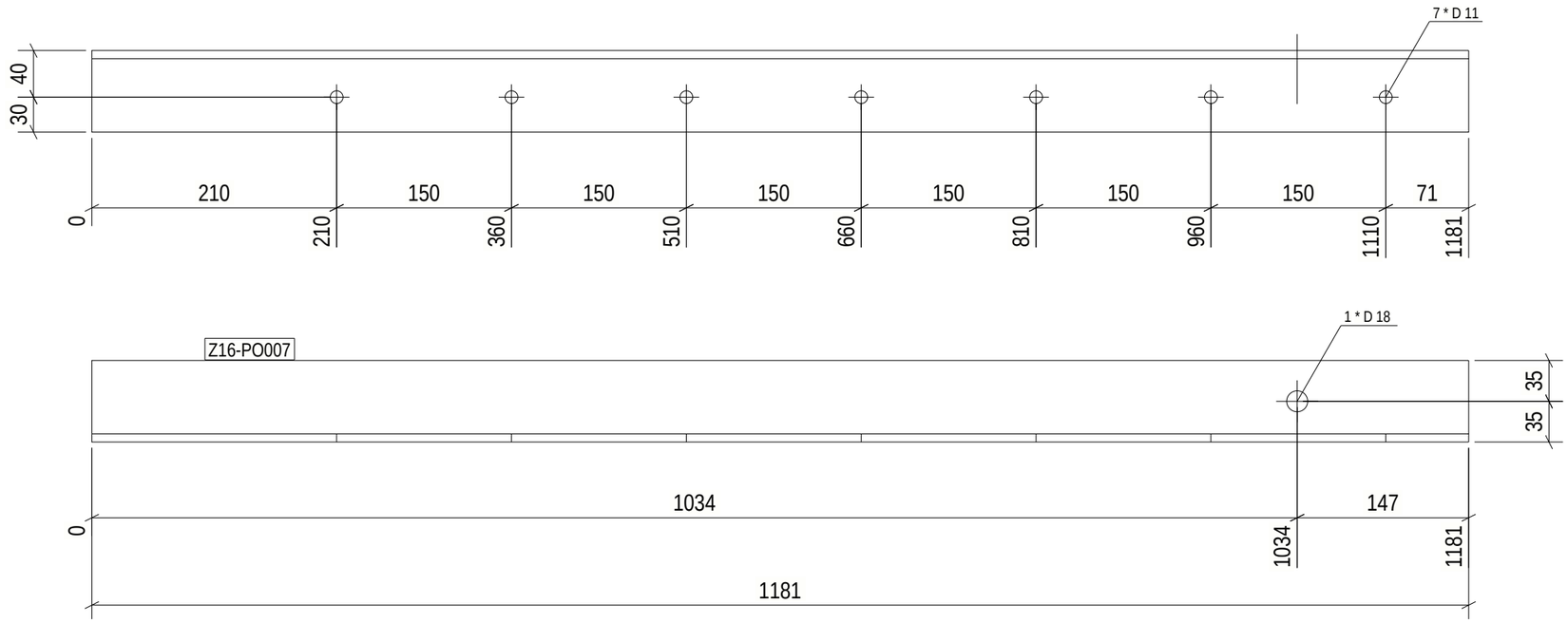

1 REQ'D AS DRAWN MK'D Z16-PO007

6 October Monorail Engineering Unit Valid For Construction

GENERAL NOTES:

1. THE DIMENSIONS SHOWN ARE NOMINAL (IN MILLIMETERS), U.N.O.
2. WELD SIZESHALL BE AISC MINIMUM OF 6 mm UNLESS NOTED OTHERWISE.
3. ALL FIELD WELDS SHALL BE INSPECTED PER QUALITY ASSURANCE AND SPECIAL INSPECTIONS.

REFERENCE DRAWINGS

1	93M-BOA-NAT-LOT-04833
2	93M-BOA-NAT-LOT-09170
3	93M-BOA-NAT-LOT-01976
4	93M-BOA-NAT-LOT-20021
5	
6	
7	
8	
9	

6TH OF OCTOBER CITY RAIL TRANSIT MONORAIL

The Authority | Hill International Consultant | ORASCOM BOMBARDIER Main Contractor | INNOVA Structural Designer

KEY PLAN:

SCALE	SHOPDRAWING	DATE
AS SHOWN		09/29/2023

REV	DATE	DSG.	CHK.	APP.	AMENDMENTS	STATUS
B	08/29/2023	M.KH	M.KH	DR.M.M	ISSUED FOR INFORMATION	IFI
A	09/21/2022	M.KH	M.KH	DR.M.M	ISSUED FOR INFORMATION	IFI

DRAWING TITLE

6TH OF OCTOBER MONORAIL SERVICE WALKWAYS ZONE(1016)
Z16-PO007

Project Code	Rubric	Initiator	Lot	Ref	Number	Revision
93M	0476	ACC	60DEP	DWG	16143	B

Tekla structures

Approval is subject to approval of coordination package between multi-discipline.

REVIEWED WITH COMMENT
MONORAILS PROJECT

Length & Area & Weight per piece						
Z16-PO006	L70*7	S235JR	1	1181.1	0.33	8.6
Mark	Profile	Grade	QTY	Length	Area	Weight

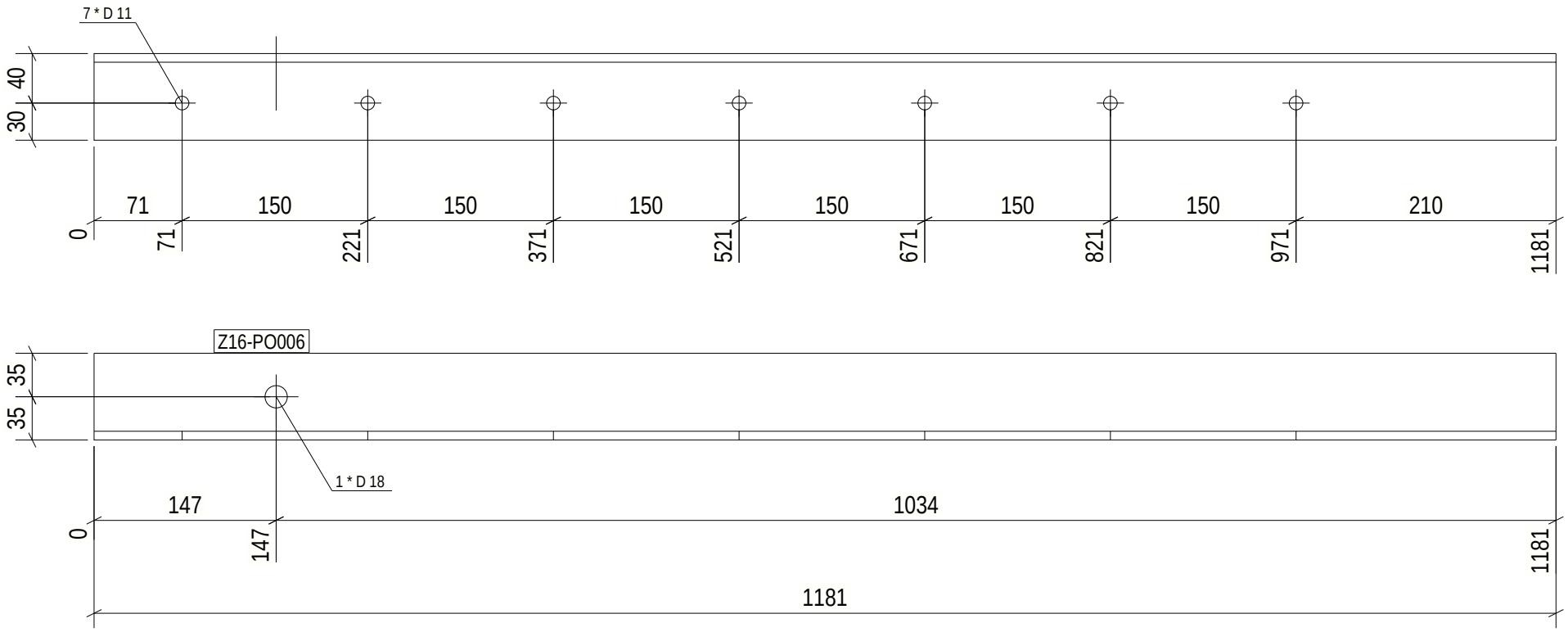

1 REQ'D AS DRAWN MK'D Z16-PO006

6 October Monorail
Engineering Unit
Valid For Construction

GENERAL NOTES:

1. THE DIMENSIONS SHOWN ARE NOMINAL (IN MILLIMETERS), U.N.O.
2. WELD SIZESHALL BE AISC MINIMUM OF 6 mm UNLESS NOTED OTHERWISE.
3. ALL FIELD WELDS SHALL BE INSPECTED PER QUALITY ASSURANCE AND SPECIAL INSPECTIONS.

REFERENCE DRAWINGS

1	93M-BOA-NAT-LOT-04833
2	93M-BOA-NAT-LOT-09170
3	93M-BOA-NAT-LOT-01976
4	93M-BOA-NAT-LOT-20021
5	
6	
7	
8	
9	

6TH OF OCTOBER CITY RAIL TRANSIT MONORAIL

The Authority | Hill International Consultant | Main Contractor | Structural Designer

KEY PLAN:

SCALE: AS SHOWN | SHOP DRAWING | DATE: 08/29/2023

DRAWING TITLE: 6TH OF OCTOBER MONORAIL SERVICE WALKWAYS ZONE(1016) Z16-PO006

REV	DATE	DSG	CHK	APP	AMENDMENTS	STATUS
B	08/29/2023	MAH	MAH	DRAW	ISSUED FOR INFORMATION	IFI
A	08/11/2022	MAH	MAH	DRAW	ISSUED FOR INFORMATION	IFI

Project Code	Rubric	Initiator	Lot	Ref	Number	Revision
9 3 M	0 4 7 6	A C C	6 0 D E P	D W G	1 6 1 4 4	B

Tekla structures

Approval is subject to approval of coordination package between multi-discipline.

REVIEWED WITH COMMENT
MONORAILS PROJECT

Length & Area & Weight per piece						
Z16-PO005	L70*7	S235JR	4	1180.0	0.33	8.6
Mark	Profile	Grade	QTY	Length	Area	Weight

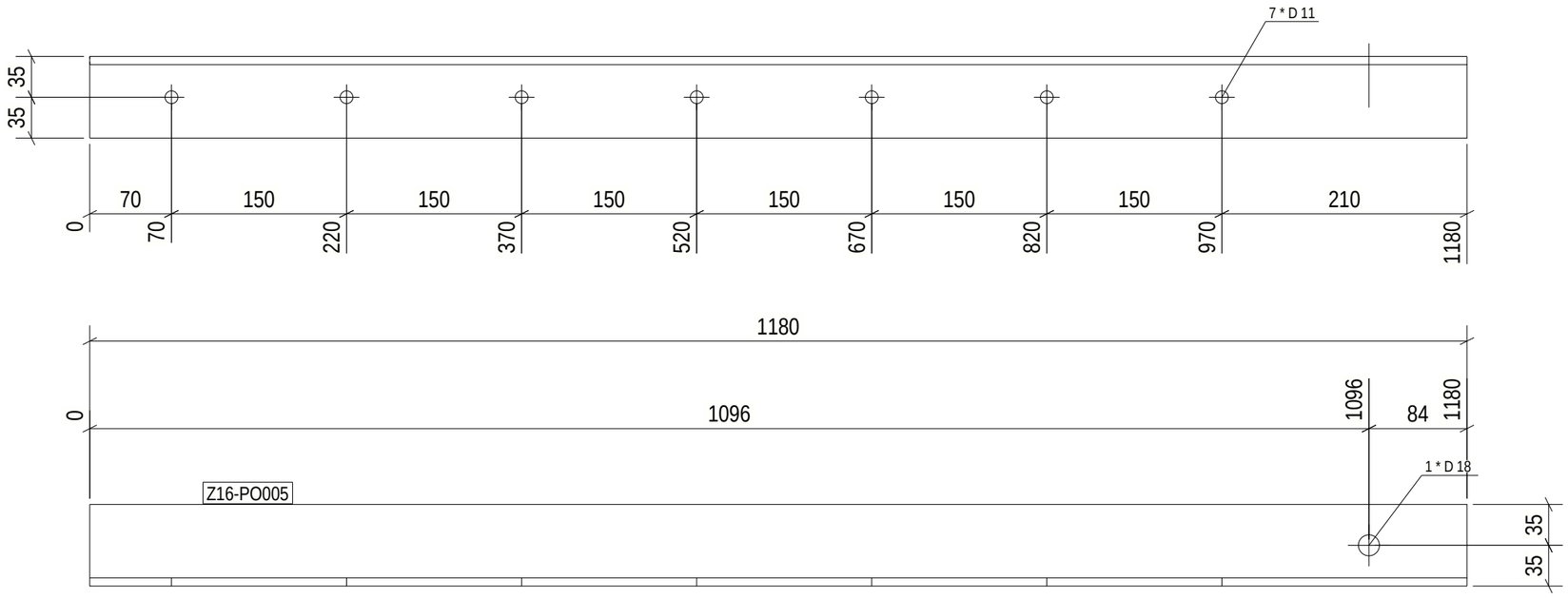

4 REQ'D AS DRAWN MK'D Z16-PO005

6 October: Monorail
Engineering Unit
Valid For Construction

GENERAL NOTES:

1. THE DIMENSIONS SHOWN ARE NOMINAL (IN MILLIMETERS), U.N.O.
2. WELD SIZESHALL BE AISC MINIMUM OF 6 mm UNLESS NOTED OTHERWISE.
3. ALL FIELD WELDS SHALL BE INSPECTED PER QUALITY ASSURANCE AND SPECIAL INSPECTIONS.

REFERENCE DRAWINGS

1	93M-BOA-NAT-LOT-04833
2	93M-BOA-NAT-LOT-09170
3	93M-BOA-NAT-LOT-01976
4	93M-BOA-NAT-LOT-20021
5	
6	
7	
8	
9	

6TH OF OCTOBER CITY RAIL TRANSIT MONORAIL

The Authority | Consultant: Hill International | Main Contractor: ORASCOM CONSTRUCTION, BOMBARDIER | Structural Designer: INNOVA TRANSPORTATION

KEY PLAN:

SCALE: AS SHOWN | SHOPDRAWING | DATE: 09/29/2023

REV	DATE	DSG.	CHK.	APP.	AMENDMENTS	STATUS
B	09/29/2023	M.KH	M.KH	DR.M.M	ISSUED FOR INFORMATION	IFI
A	09/21/2022	M.KH	M.KH	DR.M.M	ISSUED FOR INFORMATION	IFI

DRAWING TITLE

6TH OF OCTOBER MONORAIL
SERVICE WALKWAYS
ZONE(1016)
Z16-PO005

Project Code	Rubric	Initiator	Lot	Ref	Number	Revision
93M	0476	ACC	60DEP	DWG	16145	B

Tekla structures

Approval is subject to approval of coordination package between multi-discipline.

REVIEWED WITH COMMENT MONORAILS PROJECT

Length & Area & Weight per piece						
Z16-PO004	L70*7	S235JR	37	1180.0	0.33	8.6
Mark	Profile	Grade	QTY	Length	Area	Weight

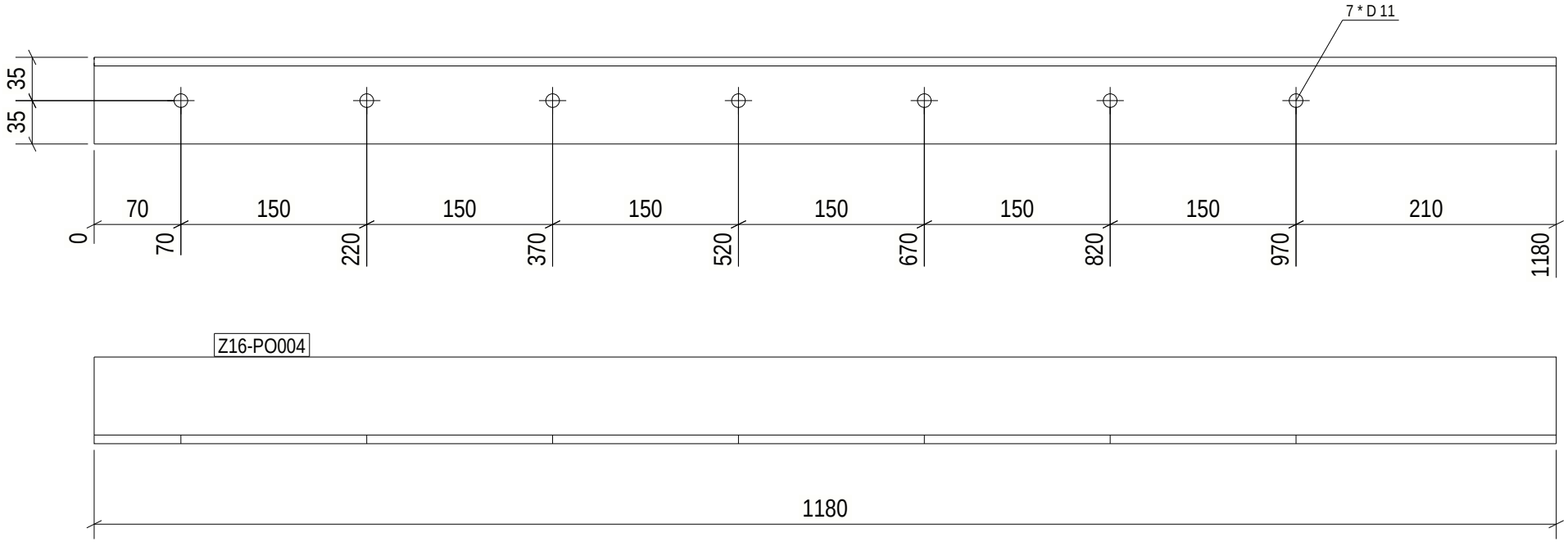

37 REQ'D AS DRAWN MK'D Z16-PO004

6 October Monorail Engineering Unit Valid For Construction

GENERAL NOTES:

1. THE DIMENSIONS SHOWN ARE NOMINAL (IN MILLIMETERS), U.N.O.
2. WELD SIZESHALL BE AISC MINIMUM OF 6 mm UNLESS NOTED OTHERWISE.
3. ALL FIELD WELDS SHALL BE INSPECTED PER QUALITY ASSURANCE AND SPECIAL INSPECTIONS.

REFERENCE DRAWINGS

1	93M-BOA-NAT-LOT-04833
2	93M-BOA-NAT-LOT-09170
3	93M-BOA-NAT-LOT-01976
4	93M-BOA-NAT-LOT-20021
5	
6	
7	
8	
9	

6TH OF OCTOBER CITY RAIL TRANSIT MONORAIL

The Authority — Hill International Consultant — Main Contractor — Structural Designer

KEY PLAN:

SCALE: AS SHOWN | SHOP DRAWING | DATE: 08/29/2023

DRAWING TITLE: 6TH OF OCTOBER MONORAIL SERVICE WALKWAYS ZONE(1016) Z16-PO004

REV	DATE	DSG	CHK	APP	AMENDMENTS	STATUS
B	08/29/2023	MAH	MAH	DRAW	ISSUED FOR INFORMATION	IFI
A	08/11/2022	MAH	MAH	DRAW	ISSUED FOR INFORMATION	IFI

Project Code	Rubric	Initiator	Lot	Ref	Number	Revision
9 3 M	0 4 7 6	A C C	6 0 D E P	D W G	1 6 1 4 6	B

Tekla structures

Approval is subject to approval of coordination package between multi-discipline.

REVIEWED WITH COMMENT
MONORAILS PROJECT

Length & Area & Weight per piece						
Z16-PO003	L70*7	S235JR	17	1180.0	0.33	8.6
Mark	Profile	Grade	QTY	Length	Area	Weight

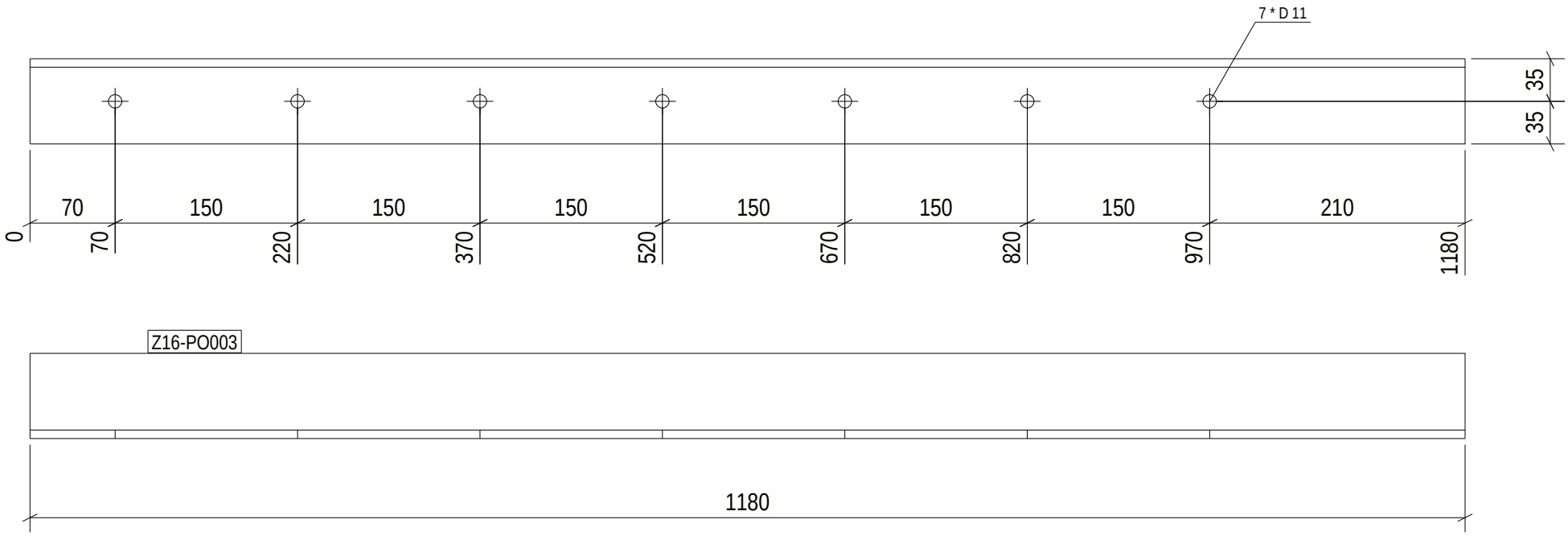

17 REQ'D AS DRAWN MK'D Z16-PO003

6 October Monorail
Engineering Unit
Valid For Construction

GENERAL NOTES:

1. THE DIMENSIONS SHOWN ARE NOMINAL (IN MILLIMETERS), U.N.O.
2. WELD SIZESHALL BE AISC MINIMUM OF 6 mm UNLESS NOTED OTHERWISE.
3. ALL FIELD WELDS SHALL BE INSPECTED PER QUALITY ASSURANCE AND SPECIAL INSPECTIONS.

REFERENCE DRAWINGS

1	93M-BOA-NAT-LOT-04833
2	93M-BOA-NAT-LOT-09170
3	93M-BOA-NAT-LOT-01976
4	93M-BOA-NAT-LOT-20021
5	
6	
7	
8	
9	

6TH OF OCTOBER CITY RAIL TRANSIT MONORAIL

The Authority | Hill International Consultant | Main Contractor | Structural Designer

KEY PLAN:

SCALE: AS SHOWN | SHOP DRAWING | DATE: 08/29/2023

DRAWING TITLE: 6TH OF OCTOBER MONORAIL SERVICE WALKWAYS ZONE(1016) Z16-PO003

REV	DATE	DSG	CHK	APP	AMENDMENTS	STATUS
B	08/29/2023	MAH	MAH	DRAW	ISSUED FOR INFORMATION	IFI
A	08/11/2022	MAH	MAH	DRAW	ISSUED FOR INFORMATION	IFI

Project Code	Rubric	Initiator	Lot	Ref	Number	Revision
9 3 M	0 4 7 6	A C C	6 0 D E P	D W G	1 6 1 4 7	B

Tekla structures

Approval is subject to approval of coordination package between multi-discipline.

REVIEWED WITH COMMENT
MONORAILS PROJECT

Length & Area & Weight per piece						
Z16-PO002	L70*7	S235JR	1	1181.1	0.33	8.6
Mark	Profile	Grade	QTY	Length	Area	Weight

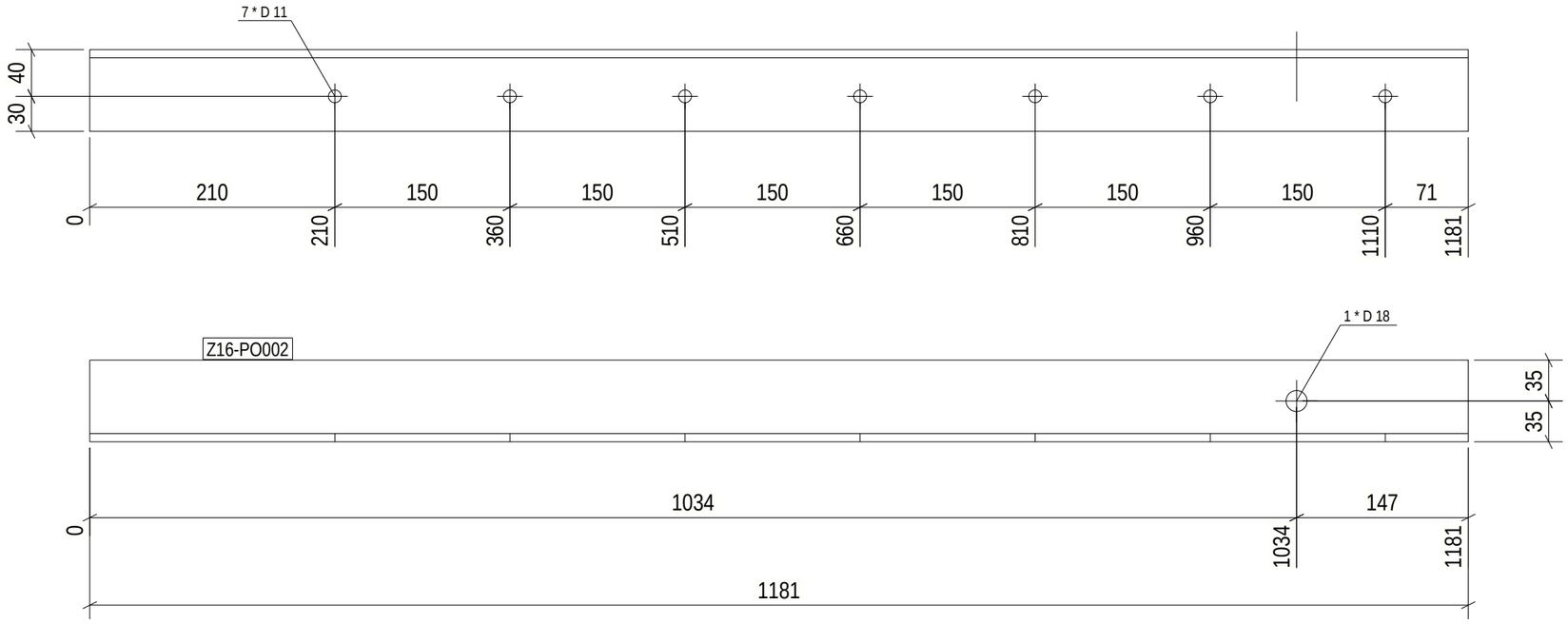

1 REQ'D AS DRAWN MK'D Z16-PO002

6 October Monorail
Engineering Unit
Valid For Construction

GENERAL NOTES:

1. THE DIMENSIONS SHOWN ARE NOMINAL (IN MILLIMETERS), U.N.O.
2. WELD SIZESHALL BE AISC MINIMUM OF 6 mm UNLESS NOTED OTHERWISE.
3. ALL FIELD WELDS SHALL BE INSPECTED PER QUALITY ASSURANCE AND SPECIAL INSPECTIONS.

REFERENCE DRAWINGS

1	93M-BOA-NAT-LOT-04833
2	93M-BOA-NAT-LOT-09170
3	93M-BOA-NAT-LOT-01976
4	93M-BOA-NAT-LOT-20021
5	
6	
7	
8	
9	

6TH OF OCTOBER CITY RAIL TRANSIT MONORAIL

The Authority — Hill International (Consultant) — Main Contractor — Structural Designer

KEY PLAN:

SCALE: AS SHOWN | SHOPDRAWING | DATE: 09/29/2023

REV	DATE	DSG.	CHK.	APP.	AMENDMENTS	STATUS
B	09/29/2023	M.KH	M.KH	DR.M.M	ISSUED FOR INFORMATION	IFI
A	09/21/2022	M.KH	M.KH	DR.M.M	ISSUED FOR INFORMATION	IFI

DRAWING TITLE

6TH OF OCTOBER MONORAIL
SERVICE WALKWAYS
ZONE(1016)
Z16-PO002

Project Code	Rubric	Initiator	Lot	Ref	Number	Revision
93M	047	ACC	60DEP	DWG	16148	B

Tekla structures

Approval is subject to approval of coordination package between multi-discipline.

REVIEWED WITH COMMENT
MONORAILS PROJECT

Length & Area & Weight per piece						
Z16-PO001	L70*7	S235JR	1	1181.1	0.33	8.6
Mark	Profile	Grade	QTY	Length	Area	Weight

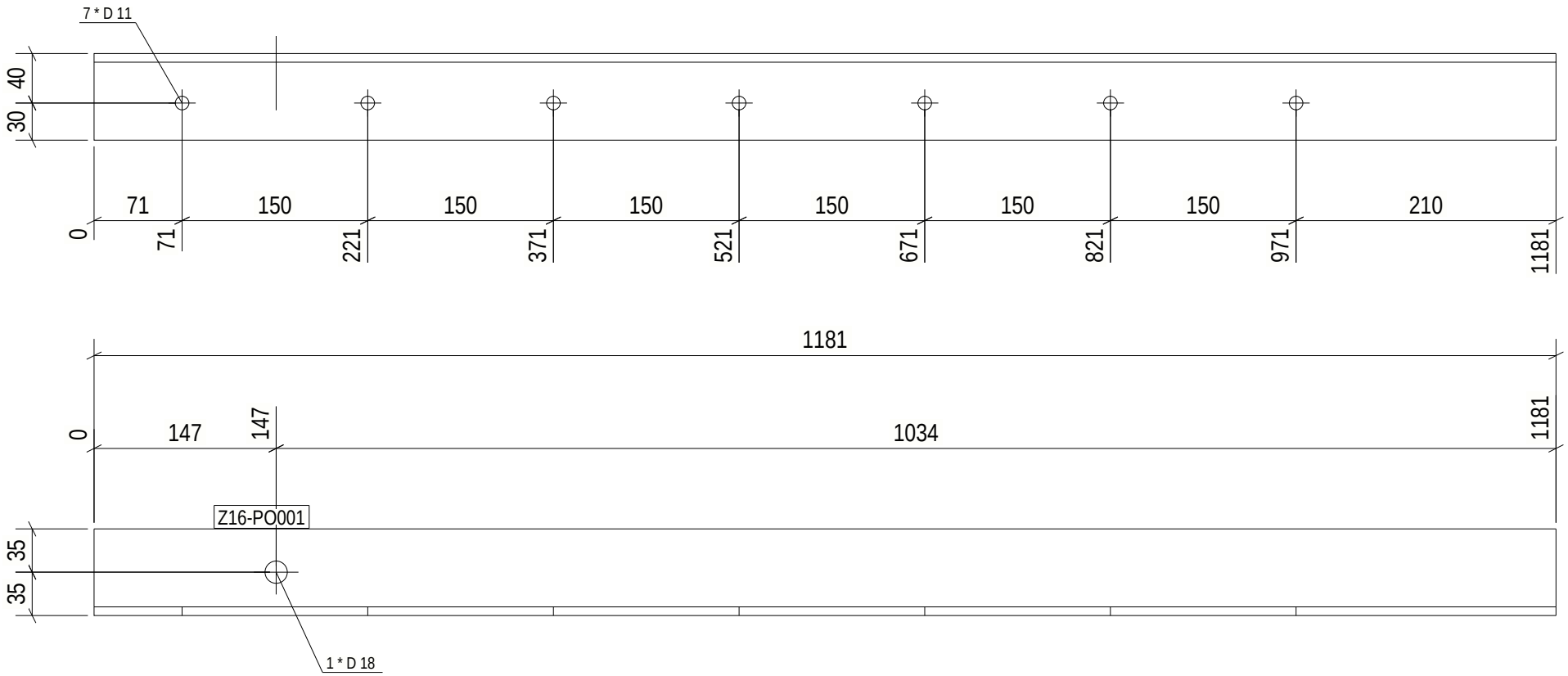

1 REQ'D AS DRAWN MK'D Z16-PO001

6 October Monorail
Engineering Unit
Valid For Construction

GENERAL NOTES:

1. THE DIMENSIONS SHOWN ARE NOMINAL (IN MILLIMETERS), U.N.O.
2. WELD SIZESHALL BE AISC MINIMUM OF 6 mm UNLESS NOTED OTHERWISE.
3. ALL FIELD WELDS SHALL BE INSPECTED PER QUALITY ASSURANCE AND SPECIAL INSPECTIONS.

REFERENCE DRAWINGS

1	93M-BOA-NAT-LOT-04833
2	93M-BOA-NAT-LOT-09170
3	93M-BOA-NAT-LOT-01976
4	93M-BOA-NAT-LOT-20021
5	
6	
7	
8	
9	

6TH OF OCTOBER CITY RAIL TRANSIT MONORAIL

The Authority — Hill International Consultant — Main Contractor — Structural Designer

KEY PLAN:

SCALE: AS SHOWN | SHOP DRAWING | DATE: 08/29/2023

DRAWING TITLE: 6TH OF OCTOBER MONORAIL SERVICE WALKWAYS ZONE(1016) Z16-PO001

REV	DATE	DSG	CHK	APP	AMENDMENTS	STATUS
B	08/29/2023	MAH	MAH	DR.MJE	ISSUED FOR INFORMATION	IFI
A	08/11/2022	MAH	MAH	DR.MJE	ISSUED FOR INFORMATION	IFI

Project Code	Rubric	Initiator	Lot	Ref	Number	Revision
9 3 M	0 4 7 6	A C C	6 0 D E P	D W G	1 6 1 4 9	B

Tekla structures

Approval is subject to approval of coordination package between multi-discipline.

REVIEWED WITH COMMENT
MONORAILS PROJECT

Length & Area & Weight per piece						
Z16-HR042	CHS48.3*4.0	S235JR	1	1927.1	0.29	8.4
Mark	Profile	Grade	QTY	Length	Area	Weight

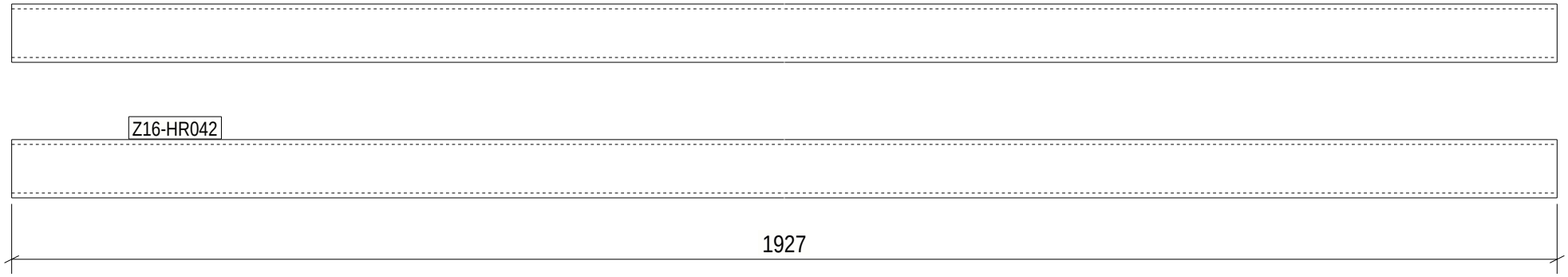

1 REQ'D AS DRAWN MK'D Z16-HR042

6 October Monorail
Engineering Unit
Valid For Construction

GENERAL NOTES:

1. THE DIMENSIONS SHOWN ARE NOMINAL (IN MILLIMETERS), U.N.O.
2. WELD SIZESHALL BE AISC MINIMUM OF 6 mm UNLESS NOTED OTHERWISE.
3. ALL FIELD WELDS SHALL BE INSPECTED PER QUALITY ASSURANCE AND SPECIAL INSPECTIONS.

REFERENCE DRAWINGS

1	93M-BOA-NAT-LOT-04833
2	93M-BOA-NAT-LOT-09170
3	93M-BOA-NAT-LOT-01976
4	93M-BOA-NAT-LOT-20021
5	
6	
7	
8	
9	

6TH OF OCTOBER CITY RAIL TRANSIT MONORAIL

The Authority | Hill International Consultant | Main Contractor | Structural Designer

KEY PLAN:

SCALE: AS SHOWN | SHOP DRAWING | DATE: 08/29/2023

DRAWING TITLE: 6TH OF OCTOBER MONORAIL SERVICE WALKWAYS ZONE(1016) Z16-HR042

REV	DATE	DSG	CHK	APP	AMENDMENTS	STATUS
B	08/29/2023	MAH	MAH	DRAW	ISSUED FOR INFORMATION	IFI
A	08/11/2022	MAH	MAH	DRAW	ISSUED FOR INFORMATION	IFI

Project Code	Rubric	Initiator	Lot	Ref	Number	Revision
9 3 M	0 4 7 6	A C C	6 0 D E P	D W G	1 6 1 5 0	B

Tekla structures

Approval is subject to approval of coordination package between multi-discipline.

REVIEWED WITH COMMENT
MONORAILS PROJECT

Length & Area & Weight per piece						
Z16-HR041	CHS48.3*4.0	S235JR	1	3811.1	0.57	16.7
Mark	Profile	Grade	QTY	Length	Area	Weight

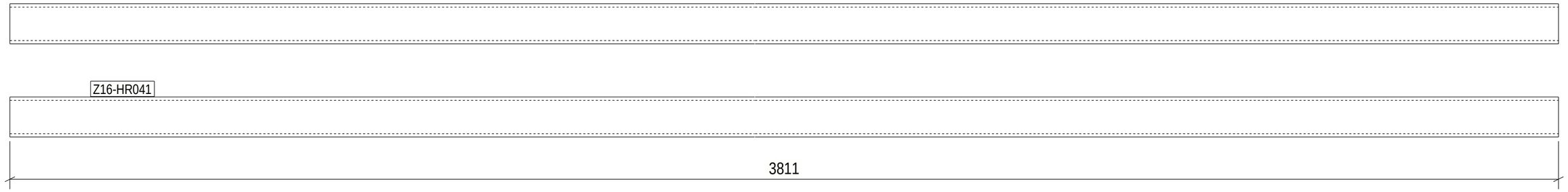

1 REQ'D AS DRAWN MK'D Z16-HR041

6 October: Monorail
Engineering Unit
Valid For Construction

GENERAL NOTES:

1. THE DIMENSIONS SHOWN ARE NOMINAL (IN MILLIMETERS), U.N.O.
2. WELD SIZESHALL BE AISC MINIMUM OF 6 mm UNLESS NOTED OTHERWISE.
3. ALL FIELD WELDS SHALL BE INSPECTED PER QUALITY ASSURANCE AND SPECIAL INSPECTIONS.

REFERENCE DRAWINGS

1	93M-BOA-NAT-LOT-04833
2	93M-BOA-NAT-LOT-09170
3	93M-BOA-NAT-LOT-01976
4	93M-BOA-NAT-LOT-20021
5	
6	
7	
8	
9	

6TH OF OCTOBER CITY RAIL TRANSIT MONORAIL

The Authority | Consultant: Hill International | Main Contractor: ORASCOM CONSTRUCTION, BOMBARDIER | Structural Designer: INNOVA TRANSPORTATION

KEY PLAN:

SCALE: AS SHOWN | SHOPDRAWING | DATE: 09/29/2023

REV	DATE	DSG.	CHK.	APP.	AMENDMENTS	STATUS
B	08/29/2023	M.KH	M.KH	DR.M.M	ISSUED FOR INFORMATION	IFI
A	09/21/2022	M.KH	M.KH	DR.M.M	ISSUED FOR INFORMATION	IFI

DRAWING TITLE
6TH OF OCTOBER MONORAIL
SERVICE WALKWAYS
ZONE(1016)
Z16-HR041

Project Code	Rubric	Initiator	Lot	Ref	Number	Revision
93M	0476	ACC60DEP	DWG	16151		B

Tekla structures

Approval is subject to approval of coordination package between multi-discipline.

REVIEWED WITH COMMENT
MONORAILS PROJECT

Length & Area & Weight per piece						
Z16-HR040	CHS48.3*4.0	S235JR	1	2979.1	0.45	13.0
Mark	Profile	Grade	QTY	Length	Area	Weight

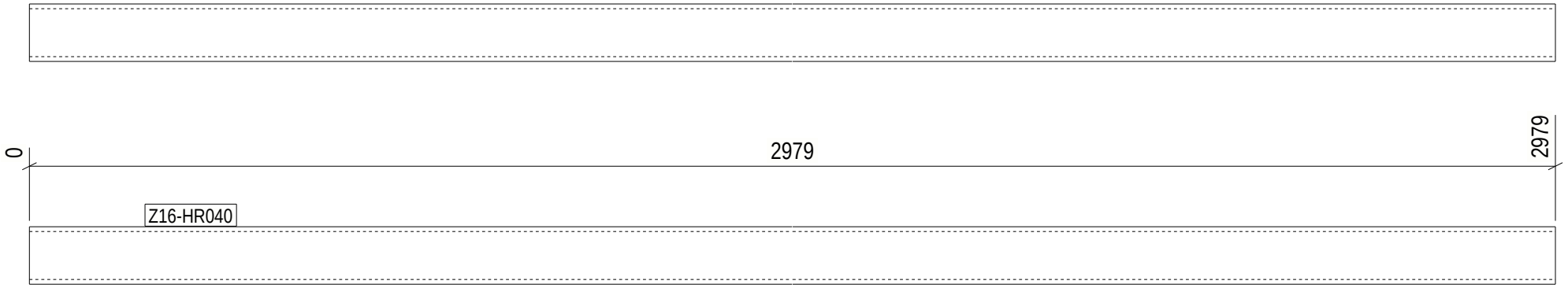

1 REQ'D AS DRAWN MK'D Z16-HR040

6 October Monorail
Engineering Unit
Valid For Construction

GENERAL NOTES:

1. THE DIMENSIONS SHOWN ARE NOMINAL (IN MILLIMETERS), U.N.O.
2. WELD SIZESHALL BE AISC MINIMUM OF 6 mm UNLESS NOTED OTHERWISE.
3. ALL FIELD WELDS SHALL BE INSPECTED PER QUALITY ASSURANCE AND SPECIAL INSPECTIONS.

REFERENCE DRAWINGS

1	93M-BOA-NAT-LOT-04833
2	93M-BOA-NAT-LOT-09170
3	93M-BOA-NAT-LOT-01976
4	93M-BOA-NAT-LOT-20021
5	
6	
7	
8	
9	

6TH OF OCTOBER CITY RAIL TRANSIT MONORAIL

The Authority — Hill International Consultant — Main Contractor — Structural Designer

KEY PLAN:

SCALE	SHOP DRAWING	DATE
AS SHOWN		08/29/2023

DRAWING TITLE

6TH OF OCTOBER MONORAIL
SERVICE WALKWAYS
ZONE(1016)
Z16-HR040

REV	DATE	DSG	CHK	APP	AMENDMENTS	STATUS
B	08/29/2023	MAH	MAH	DRAW	ISSUED FOR INFORMATION	IFI
A	08/11/2022	MAH	MAH	DRAW	ISSUED FOR INFORMATION	IFI

Project Code	Rubric	Initiator	Lot	Ref	Number	Revision
9 3 M	0 4 7 6	A C C	6 0 D E P	D W G	1 6 1 5 2	B

Tekla structures

Approval is subject to approval of coordination package between multi-discipline.

REVIEWED WITH COMMENT
MONORAILS PROJECT

Length & Area & Weight per piece						
Z16-HR039	CHS48.3*4.0	S235JR	1	2224.4	0.33	9.7
Mark	Profile	Grade	QTY	Length	Area	Weight

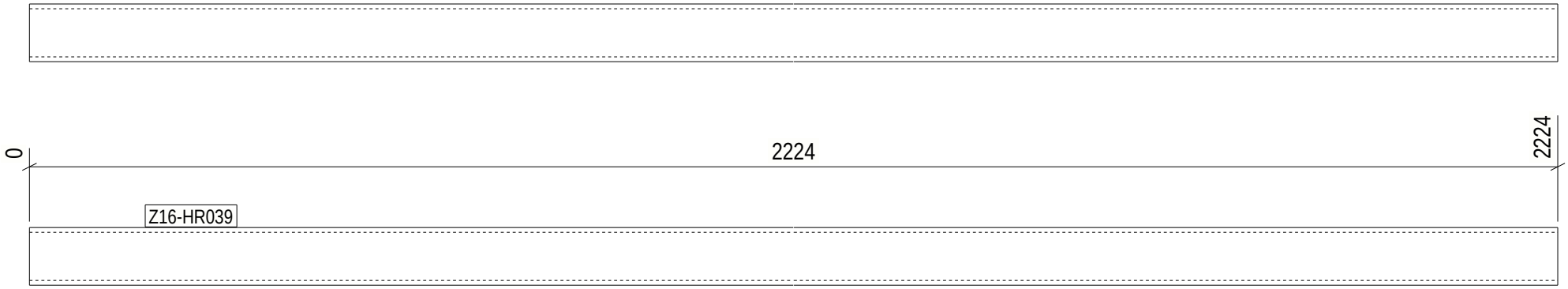

1 REQ'D AS DRAWN MK'D Z16-HR039

6 October Monorail
Engineering Unit
Valid For Construction

Tekla structures

GENERAL NOTES:

1. THE DIMENSIONS SHOWN ARE NOMINAL (IN MILLIMETERS), U.N.O.
2. WELD SIZESHALL BE AISC MINIMUM OF 6 mm UNLESS NOTED OTHERWISE.
3. ALL FIELD WELDS SHALL BE INSPECTED PER QUALITY ASSURANCE AND SPECIAL INSPECTIONS.

REFERENCE DRAWINGS

1	93M-BOA-NAT-LOT-04833
2	93M-BOA-NAT-LOT-09170
3	93M-BOA-NAT-LOT-01976
4	93M-BOA-NAT-LOT-20021
5	
6	
7	
8	
9	

6TH OF OCTOBER CITY RAIL TRANSIT MONORAIL

The Authority — Hill International Consultant — Main Contractor — Structural Designer

KEY PLAN:

SCALE	SHOP DRAWING	DATE
AS SHOWN		08/29/2023

DRAWING TITLE

6TH OF OCTOBER MONORAIL
SERVICE WALKWAYS
ZONE(1016)
Z16-HR039

REV	DATE	DSG	CHK	APP	AMENDMENTS	STATUS
B	08/29/2023	MAH	MAH	DRAW	ISSUED FOR INFORMATION	IFI
A	08/11/2022	MAH	MAH	DRAW	ISSUED FOR INFORMATION	IFI

Project Code	Rubric	Initiator	Lot	Ref	Number	Revision
9 3	M 0 4 7 6	A C C	6 0 D E P	D W G	1 6 1 5 3	B

Approval is subject to approval of coordination package between multi-discipline.

REVIEWED WITH COMMENT
MONORAILS PROJECT

Length & Area & Weight per piece						
Z16-HR038	CHS48.3*4.0	S235JR	1	6644.1	1.00	29.1
Mark	Profile	Grade	QTY	Length	Area	Weight

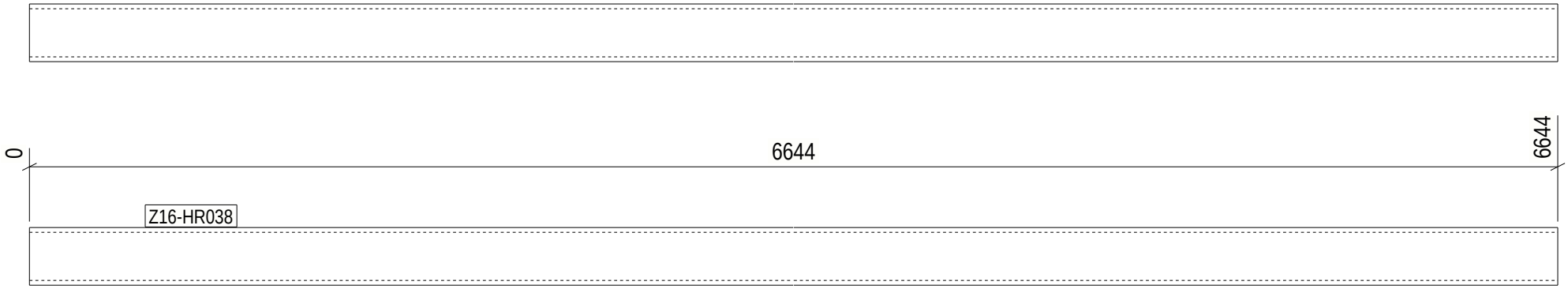

1 REQ'D AS DRAWN MK'D Z16-HR038

6 October Monorail
Engineering Unit
Valid For Construction

GENERAL NOTES:

1. THE DIMENSIONS SHOWN ARE NOMINAL (IN MILLIMETERS), U.N.O.
2. WELD SIZESHALL BE AISC MINIMUM OF 6 mm UNLESS NOTED OTHERWISE.
3. ALL FIELD WELDS SHALL BE INSPECTED PER QUALITY ASSURANCE AND SPECIAL INSPECTIONS.

REFERENCE DRAWINGS

1	93M-BOA-NAT-LOT-04833
2	93M-BOA-NAT-LOT-09170
3	93M-BOA-NAT-LOT-01976
4	93M-BOA-NAT-LOT-20021
5	
6	
7	
8	
9	

6TH OF OCTOBER CITY RAIL TRANSIT MONORAIL

The Authority | Hill International Consultant | Main Contractor | Structural Designer

KEY PLAN:

REV	DATE	DSG	CHK	APP	AMENDMENTS	STATUS
B	08/29/2023	MAH	MAH	DRAW	ISSUED FOR INFORMATION	IFI
A	08/11/2022	MAH	MAH	DRAW	ISSUED FOR INFORMATION	IFI

SCALE: AS SHOWN | SHOP DRAWING | DATE: 08/29/2023

DRAWING TITLE: 6TH OF OCTOBER MONORAIL SERVICE WALKWAYS ZONE(1016) Z16-HR038

Project Code	Rubric	Initiator	Lot	Ref	Number	Revision
9 3 M	0 4 7 6	A C C	6 0 D E P	D W G	1 6 1 5 4	B

Tekla structures

Approval is subject to approval of coordination package between multi-discipline.

REVIEWED WITH COMMENT
MONORAILS PROJECT

Length & Area & Weight per piece						
Z16-HR037	CHS48.3*4.0	S235JR	1	2973.9	0.45	13.0
Mark	Profile	Grade	QTY	Length	Area	Weight

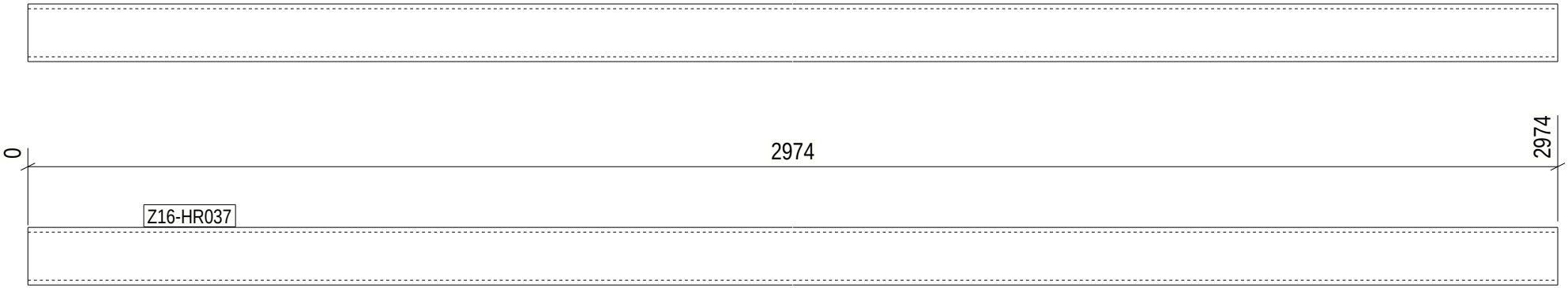

1 REQ'D AS DRAWN MK'D Z16-HR037

6 October Monorail
Engineering Unit
Valid For Construction

GENERAL NOTES:

1. THE DIMENSIONS SHOWN ARE NOMINAL (IN MILLIMETERS), U.N.O.
2. WELD SIZESHALL BE AISC MINIMUM OF 6 mm UNLESS NOTED OTHERWISE.
3. ALL FIELD WELDS SHALL BE INSPECTED PER QUALITY ASSURANCE AND SPECIAL INSPECTIONS.

REFERENCE DRAWINGS

1	93M-BOA-NAT-LOT-04833
2	93M-BOA-NAT-LOT-09170
3	93M-BOA-NAT-LOT-01976
4	93M-BOA-NAT-LOT-20021
5	
6	
7	
8	
9	

6TH OF OCTOBER CITY RAIL TRANSIT MONORAIL

The Authority | Hill International Consultant | Main Contractor | Structural Designer

KEY PLAN:

SCALE	SHOP DRAWING	DATE
AS SHOWN		08/29/2023

DRAWING TITLE
6TH OF OCTOBER MONORAIL
SERVICE WALKWAYS
ZONE(1016)
Z16-HR037

REV	DATE	DSG	CHK	APP	AMENDMENTS	STATUS
B	08/29/2023	MAH	MAH	DRAW	ISSUED FOR INFORMATION	IFI
A	08/11/2022	MAH	MAH	DRAW	ISSUED FOR INFORMATION	IFI

Project Code	Rubric	Initiator	Lot	Ref	Number	Revision
9 3 M	0 4 7 6	A C C	6 0 D E P	D W G	1 6 1 5 5	B

Tekla structures

Approval is subject to approval of coordination package between multi-discipline.

REVIEWED WITH COMMENT
MONORAILS PROJECT

Length & Area & Weight per piece						
Z16-HR036	CHS48.3*4.0	S235JR	2	1476.5	0.22	6.5
Mark	Profile	Grade	QTY	Length	Area	Weight

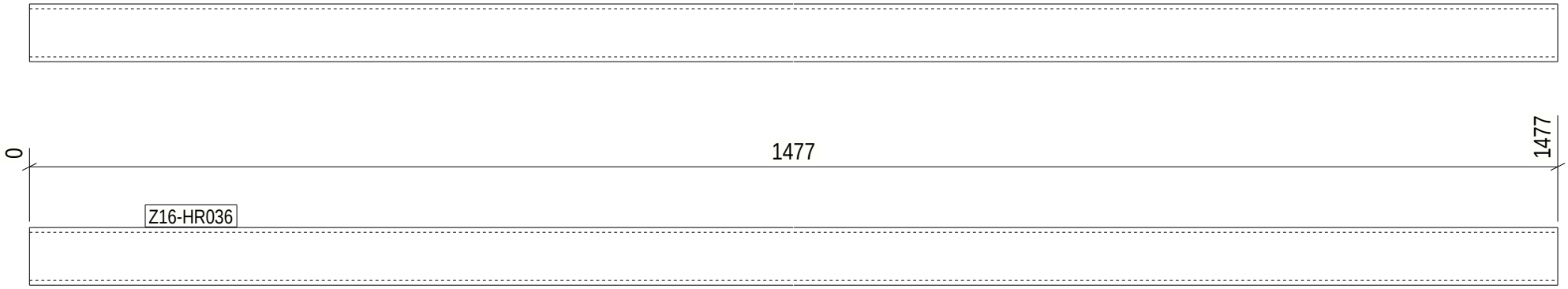

2 REQ'D AS DRAWN MK'D Z16-HR036

6 October Monorail
Engineering Unit
Valid For Construction

GENERAL NOTES:

1. THE DIMENSIONS SHOWN ARE NOMINAL (IN MILLIMETERS), U.N.O.
2. WELD SIZESHALL BE AISC MINIMUM OF 6 mm UNLESS NOTED OTHERWISE.
3. ALL FIELD WELDS SHALL BE INSPECTED PER QUALITY ASSURANCE AND SPECIAL INSPECTIONS.

REFERENCE DRAWINGS

1	93M-BOA-NAT-LOT-04833
2	93M-BOA-NAT-LOT-09170
3	93M-BOA-NAT-LOT-01976
4	93M-BOA-NAT-LOT-20021
5	
6	
7	
8	
9	

6TH OF OCTOBER CITY RAIL TRANSIT MONORAIL

The Authority | Hill International Consultant | Main Contractor | Structural Designer

KEY PLAN:

REV	DATE	DSG	CHK	APP	AMENDMENTS	STATUS
B	08/29/2023	MAH	MAH	DRAW	ISSUED FOR INFORMATION	IFI
A	08/11/2022	MAH	MAH	DRAW	ISSUED FOR INFORMATION	IFI

SCALE: AS SHOWN | SHOP DRAWING | DATE: 08/29/2023

DRAWING TITLE: 6TH OF OCTOBER MONORAIL SERVICE WALKWAYS ZONE(1016) Z16-HR036

Project Code	Rubric	Initiator	Lot	Ref	Number	Revision
9 3 M	0 4 7 6	A C C	6 0 D E P	D W G	1 6 1 5 6	B

Tekla structures

Approval is subject to approval of coordination package between multi-discipline.

REVIEWED WITH COMMENT
MONORAILS PROJECT

Length & Area & Weight per piece						
Z16-HR035	CHS48.3*4.0	S235JR	1	2643.7	0.40	11.6
Mark	Profile	Grade	QTY	Length	Area	Weight

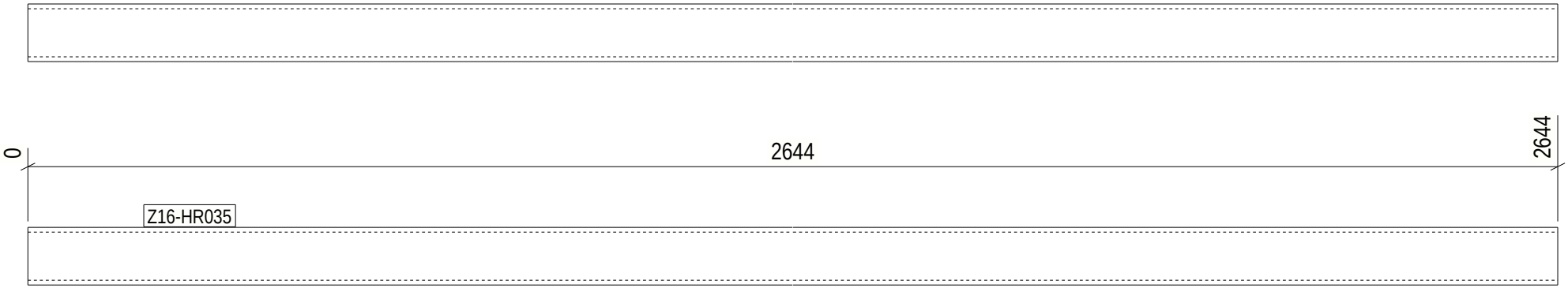

1 REQ'D AS DRAWN MK'D Z16-HR035

6 October Monorail
Engineering Unit
Valid For Construction

GENERAL NOTES:

1. THE DIMENSIONS SHOWN ARE NOMINAL (IN MILLIMETERS), U.N.O.
2. WELD SIZESHALL BE AISC MINIMUM OF 6 mm UNLESS NOTED OTHERWISE.
3. ALL FIELD WELDS SHALL BE INSPECTED PER QUALITY ASSURANCE AND SPECIAL INSPECTIONS.

REFERENCE DRAWINGS

1	93M-BOA-NAT-LOT-04833
2	93M-BOA-NAT-LOT-09170
3	93M-BOA-NAT-LOT-01976
4	93M-BOA-NAT-LOT-20021
5	
6	
7	
8	
9	

6TH OF OCTOBER CITY RAIL TRANSIT MONORAIL

The Authority | Hill International Consultant | Main Contractor | Structural Designer

KEY PLAN:

REV	DATE	DSG	CHK	APP	AMENDMENTS	STATUS
B	08/29/2023	MAH	MAH	DRAW	ISSUED FOR INFORMATION	IFI
A	08/11/2022	MAH	MAH	DRAW	ISSUED FOR INFORMATION	IFI

SCALE: AS SHOWN | SHOP DRAWING | DATE: 08/29/2023

DRAWING TITLE: 6TH OF OCTOBER MONORAIL SERVICE WALKWAYS ZONE(1016) Z16-HR035

Project Code	Rubric	Initiator	Lot	Ref	Number	Revision
9 3 M	0 4 7 6	A C C	6 0 D E P	D W G	1 6 1 5 7	B

Tekla structures

Approval is subject to approval of coordination package between multi-discipline.

REVIEWED WITH COMMENT
MONORAILS PROJECT

Length & Area & Weight per piece						
Z16-HR034	CHS48.3*4.0	S235JR	1	1296.3	0.19	5.7
Mark	Profile	Grade	QTY	Length	Area	Weight

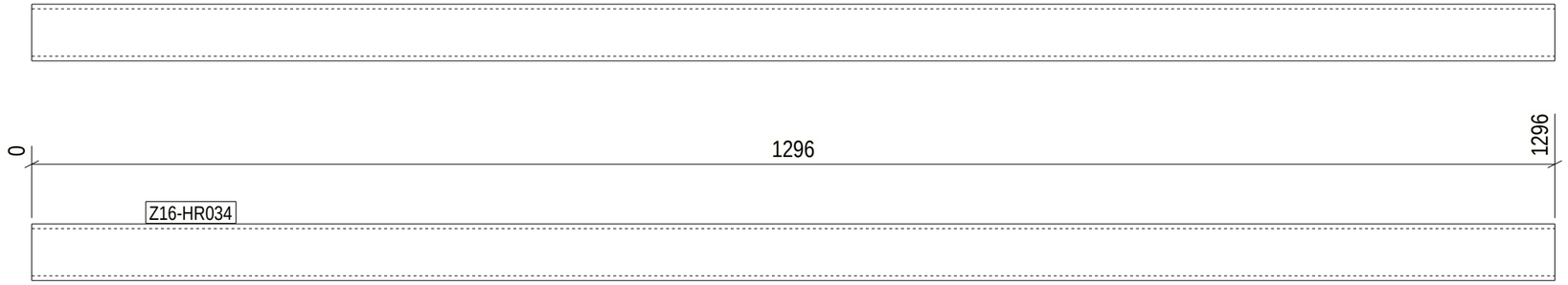

1 REQ'D AS DRAWN MK'D Z16-HR034

6 October: Monorail
Engineering Unit
Valid For Construction

GENERAL NOTES:

1. THE DIMENSIONS SHOWN ARE NOMINAL (IN MILLIMETERS), U.N.O.
2. WELD SIZESHALL BE AISC MINIMUM OF 6 mm UNLESS NOTED OTHERWISE.
3. ALL FIELD WELDS SHALL BE INSPECTED PER QUALITY ASSURANCE AND SPECIAL INSPECTIONS.

REFERENCE DRAWINGS

1	93M-BOA-NAT-LOT-04833
2	93M-BOA-NAT-LOT-09170
3	93M-BOA-NAT-LOT-01976
4	93M-BOA-NAT-LOT-20021
5	
6	
7	
8	
9	

6TH OF OCTOBER CITY RAIL TRANSIT MONORAIL

The Authority | Consultant: Hill International | Main Contractor: ORASCOM CONSTRUCTION, BOMBARDIER | Structural Designer: INNOVA

KEY PLAN:

SCALE	SHOPDRAWING	DATE
AS SHOWN		09/29/2023

REV	DATE	DSG.	CHK.	APP.	AMENDMENTS	STATUS
B	08/29/2023	M.KH	M.KH	DR.M.M	ISSUED FOR INFORMATION	IFI
A	09/21/2022	M.KH	M.KH	DR.M.M	ISSUED FOR INFORMATION	IFI

DRAWING TITLE

6TH OF OCTOBER MONORAIL
SERVICE WALKWAYS
ZONE(1016)
Z16-HR034

Project Code	Rubric	Initiator	Lot	Ref	Number	Revision
93	M047	ACC	60DE	P	DWG	16158	B

Tekla structures

Approval is subject to approval of coordination package between multi-discipline.

REVIEWED WITH COMMENT
MONORAILS PROJECT

Length & Area & Weight per piece						
Z16-HR033	CHS48.3*4.0	S235JR	2	2986.6	0.45	13.1
Mark	Profile	Grade	QTY	Length	Area	Weight

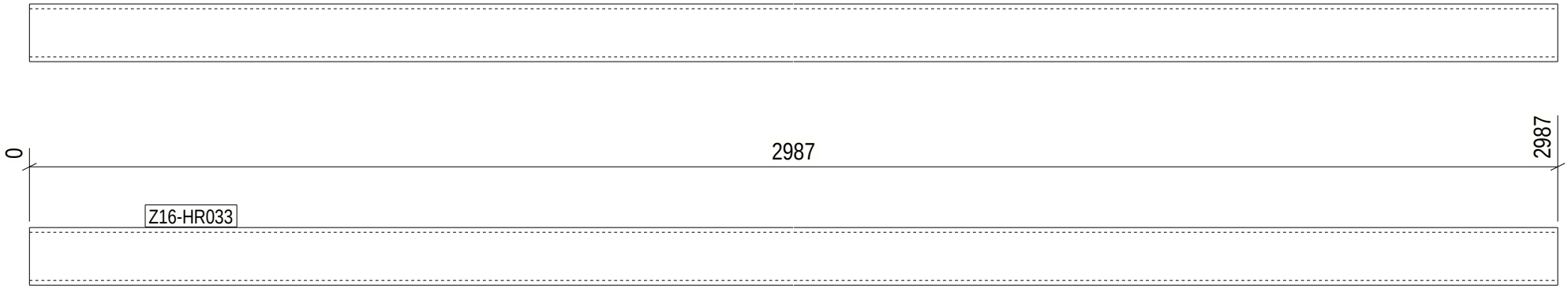

2 REQ'D AS DRAWN MK'D Z16-HR033

6 October Monorail
Engineering Unit
Valid For Construction

GENERAL NOTES:

1. THE DIMENSIONS SHOWN ARE NOMINAL (IN MILLIMETERS), U.N.O.
2. WELD SIZESHALL BE AISC MINIMUM OF 6 mm UNLESS NOTED OTHERWISE.
3. ALL FIELD WELDS SHALL BE INSPECTED PER QUALITY ASSURANCE AND SPECIAL INSPECTIONS.

REFERENCE DRAWINGS

1	93M-BOA-NAT-LOT-04833
2	93M-BOA-NAT-LOT-09170
3	93M-BOA-NAT-LOT-01976
4	93M-BOA-NAT-LOT-20021
5	
6	
7	
8	
9	

6TH OF OCTOBER CITY RAIL TRANSIT MONORAIL

The Authority | Hill International Consultant | Main Contractor | Structural Designer

KEY PLAN:

SCALE	SHOP DRAWING	DATE
AS SHOWN		08/29/2023

DRAWING TITLE
6TH OF OCTOBER MONORAIL
SERVICE WALKWAYS
ZONE(1016)
Z16-HR033

REV	DATE	DSG	CHK	APP	AMENDMENTS	STATUS
B	08/29/2023	MAH	MAH	DRAW	ISSUED FOR INFORMATION	IFI
A	08/11/2022	MAH	MAH	DRAW	ISSUED FOR INFORMATION	IFI

Project Code	Rubric	Initiator	Lot	Ref	Number	Revision
9 3 M	0 4 7 6	A C C	6 0 D E P	D W G	1 6 1 5 9	B

Tekla structures

Approval is subject to approval of coordination package between multi-discipline.

REVIEWED WITH COMMENT
MONORAILS PROJECT

Length & Area & Weight per piece						
Z16-HR032	CHS48.3*4.0	S235JR	1	2364.9	0.35	10.3
Mark	Profile	Grade	QTY	Length	Area	Weight

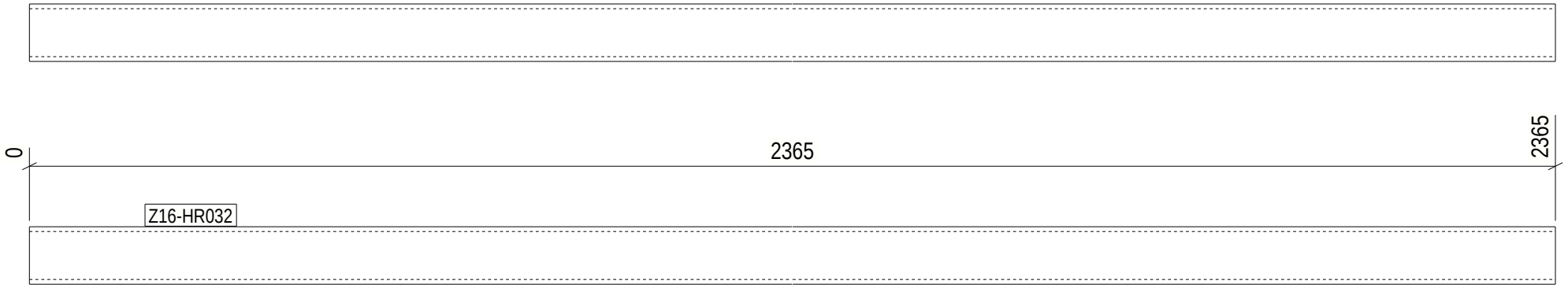

1 REQ'D AS DRAWN MK'D Z16-HR032

6 October Monorail
Engineering Unit
Valid For Construction

GENERAL NOTES:

1. THE DIMENSIONS SHOWN ARE NOMINAL (IN MILLIMETERS), U.N.O.
2. WELD SIZESHALL BE AISC MINIMUM OF 6 mm UNLESS NOTED OTHERWISE.
3. ALL FIELD WELDS SHALL BE INSPECTED PER QUALITY ASSURANCE AND SPECIAL INSPECTIONS.

REFERENCE DRAWINGS

1	93M-BOA-NAT-LOT-04833
2	93M-BOA-NAT-LOT-09170
3	93M-BOA-NAT-LOT-01976
4	93M-BOA-NAT-LOT-20021
5	
6	
7	
8	
9	

6TH OF OCTOBER CITY RAIL TRANSIT MONORAIL

The Authority | Hill International Consultant | Main Contractor | Structural Designer

KEY PLAN:

REV	DATE	DSG	CHK	APP	AMENDMENTS	STATUS
B	08/29/2023	MAH	MAH	DRAW	ISSUED FOR INFORMATION	IFI
A	08/11/2022	MAH	MAH	DRAW	ISSUED FOR INFORMATION	IFI

SCALE: AS SHOWN | SHOP DRAWING | DATE: 08/29/2023

DRAWING TITLE: 6TH OF OCTOBER MONORAIL SERVICE WALKWAYS ZONE(1016) Z16-HR032

Project Code	Rubric	Initiator	Lot	Ref	Number	Revision
9 3 M	0 4 7 6	A C C	6 0 D E P	D W G	1 6 1 6 0	B

Tekla structures

Approval is subject to approval of coordination package between multi-discipline.

REVIEWED WITH COMMENT
MONORAILS PROJECT

Length & Area & Weight per piece						
Z16-HR031	CHS48.3*4.0	S235JR	1	4994.2	0.75	21.8
Mark	Profile	Grade	QTY	Length	Area	Weight

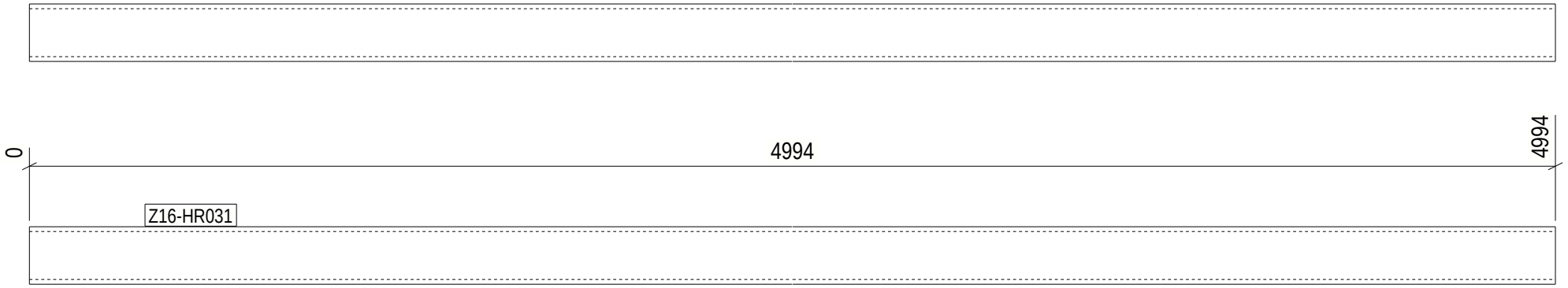

1 REQ'D AS DRAWN MK'D Z16-HR031

6 October Monorail
Engineering Unit
Valid For Construction

Tekla structures

GENERAL NOTES:

1. THE DIMENSIONS SHOWN ARE NOMINAL (IN MILLIMETERS), U.N.O.
2. WELD SIZESHALL BE AISC MINIMUM OF 6 mm UNLESS NOTED OTHERWISE.
3. ALL FIELD WELDS SHALL BE INSPECTED PER QUALITY ASSURANCE AND SPECIAL INSPECTIONS.

REFERENCE DRAWINGS

1	93M-BOA-NAT-LOT-04833
2	93M-BOA-NAT-LOT-09170
3	93M-BOA-NAT-LOT-01976
4	93M-BOA-NAT-LOT-20021
5	
6	
7	
8	
9	

6TH OF OCTOBER CITY RAIL TRANSIT MONORAIL

The Authority | Hill International Consultant | Main Contractor | Structural Designer

KEY PLAN:

SCALE	SHOP DRAWING	DATE
AS SHOWN		08/29/2023

DRAWING TITLE

6TH OF OCTOBER MONORAIL
SERVICE WALKWAYS
ZONE(1016)
Z16-HR031

REV	DATE	DSG	CHK	APP	AMENDMENTS	STATUS
B	08/29/2023	MAH	MAH	DRAW	ISSUED FOR INFORMATION	IFI
A	08/11/2022	MAH	MAH	DRAW	ISSUED FOR INFORMATION	IFI

Project Code	Rubric	Initiator	Lot	Ref	Number	Revision
9 3 M	0 4 7 6	A C C	6 0 D E P	D W G	1 6 1 6 1	B

Approval is subject to approval of coordination package between multi-discipline.

REVIEWED WITH COMMENT
MONORAILS PROJECT

Length & Area & Weight per piece						
Z16-HR030	CHS48.3*4.0	S235JR	1	5267.9	0.79	23.0
Mark	Profile	Grade	QTY	Length	Area	Weight

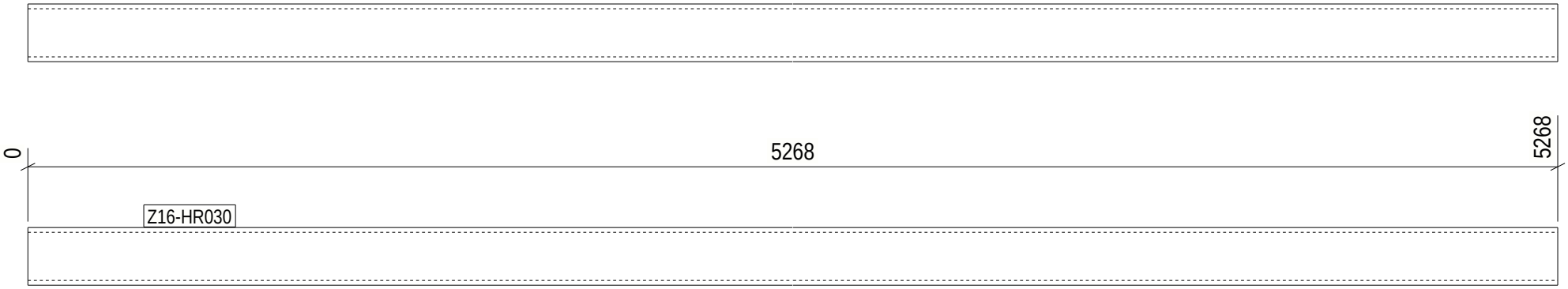

1 REQ'D AS DRAWN MK'D Z16-HR030

6 October Monorail
Engineering Unit
Valid For Construction

GENERAL NOTES:

1. THE DIMENSIONS SHOWN ARE NOMINAL (IN MILLIMETERS), U.N.O.
2. WELD SIZESHALL BE AISC MINIMUM OF 6 mm UNLESS NOTED OTHERWISE.
3. ALL FIELD WELDS SHALL BE INSPECTED PER QUALITY ASSURANCE AND SPECIAL INSPECTIONS.

REFERENCE DRAWINGS

1	93M-BOA-NAT-LOT-04833
2	93M-BOA-NAT-LOT-09170
3	93M-BOA-NAT-LOT-01976
4	93M-BOA-NAT-LOT-20021
5	
6	
7	
8	
9	

6TH OF OCTOBER CITY RAIL TRANSIT MONORAIL

The Authority | Hill International Consultant | Main Contractor | Structural Designer

KEY PLAN:

REV	DATE	DSG	CHK	APP	AMENDMENTS	STATUS
B	08/29/2023	MAH	MAH	DRAW	ISSUED FOR INFORMATION	IFI
A	08/11/2022	MAH	MAH	DRAW	ISSUED FOR INFORMATION	IFI

SCALE: AS SHOWN | SHOP DRAWING | DATE: 08/29/2023

DRAWING TITLE: 6TH OF OCTOBER MONORAIL SERVICE WALKWAYS ZONE(1016) Z16-HR030

Project Code	Rubric	Initiator	Lot	Ref	Number	Revision
9 3 M	0 4 7 6	A C C	6 0 D E P	D W G	1 6 1 6 2	B

Tekla structures

Approval is subject to approval of coordination package between multi-discipline.

REVIEWED WITH COMMENT
MONORAILS PROJECT

Length & Area & Weight per piece						
Z16-HR029	CHS48.3*4.0	S235JR	1	4280.1	0.64	18.7
Mark	Profile	Grade	QTY	Length	Area	Weight

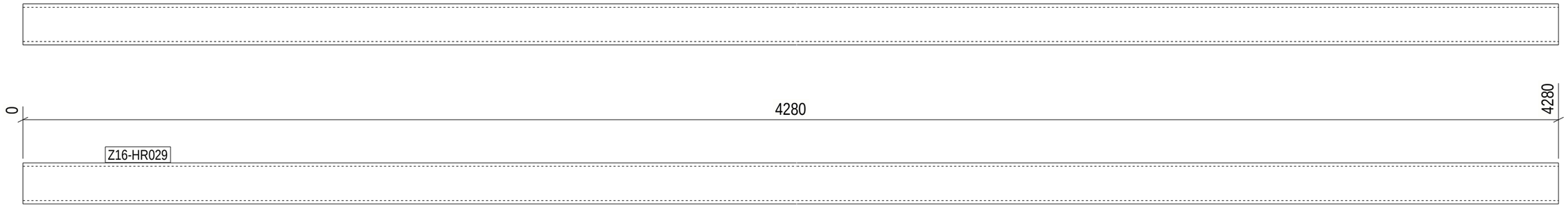

1 REQ'D AS DRAWN MK'D Z16-HR029

6 October Monorail
Engineering Unit
Valid For Construction

GENERAL NOTES:

1. THE DIMENSIONS SHOWN ARE NOMINAL (IN MILLIMETERS), U.N.O.
2. WELD SIZESHALL BE AISC MINIMUM OF 6 mm UNLESS NOTED OTHERWISE.
3. ALL FIELD WELDS SHALL BE INSPECTED PER QUALITY ASSURANCE AND SPECIAL INSPECTIONS.

REFERENCE DRAWINGS

1	93M-BOA-NAT-LOT-04833
2	93M-BOA-NAT-LOT-09170
3	93M-BOA-NAT-LOT-01976
4	93M-BOA-NAT-LOT-20021
5	
6	
7	
8	
9	

6TH OF OCTOBER CITY RAIL TRANSIT MONORAIL

The Authority | Hill International (Consultant) | ORASCOM CONSTRUCTION / BOMBARDIER (Main Contractor) | INNOVA TRANSPORTATION (Structural Designer)

KEY PLAN:

SCALE: AS SHOWN | SHOPDRAWING | DATE: 09/29/2023

REV	DATE	DSG.	CHK.	APP.	AMENDMENTS	STATUS
B	08/29/2023	M.KH	M.KH	DR.M.M	ISSUED FOR INFORMATION	IFI
A	09/21/2022	M.KH	M.KH	DR.M.M	ISSUED FOR INFORMATION	IFI

DRAWING TITLE

6TH OF OCTOBER MONORAIL
SERVICE WALKWAYS
ZONE(1016)
Z16-HR029

Project Code	Rubric	Initiator	Lot	Ref	Number	Revision
93M	0476	ACC60DEP	DWG	1616	3	B

Tekla structures

Approval is subject to approval of coordination package between multi-discipline.

REVIEWED WITH COMMENT
MONORAILS PROJECT

Length & Area & Weight per piece						
Z16-HR028	CHS48.3*4.0	S235JR	1	5964.9	0.89	26.1
Mark	Profile	Grade	QTY	Length	Area	Weight

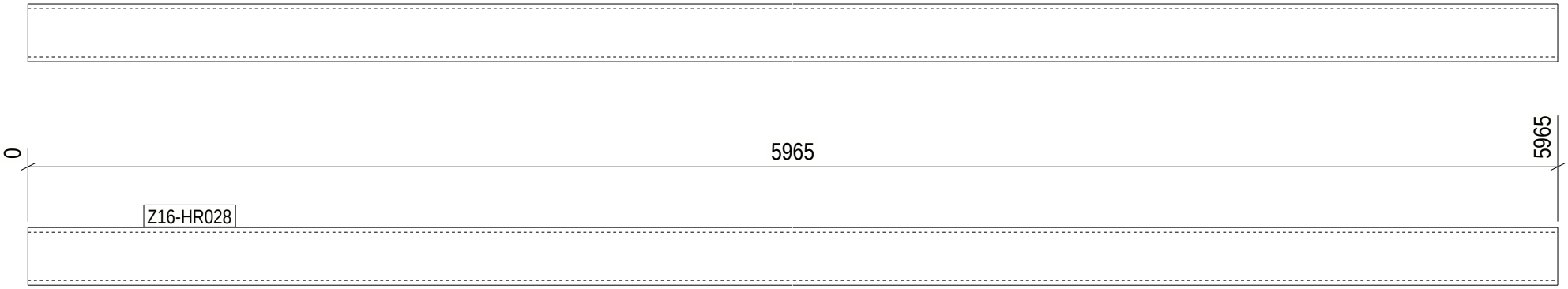

1 REQ'D AS DRAWN MK'D Z16-HR028

6 October Monorail
Engineering Unit
Valid For Construction

GENERAL NOTES:

1. THE DIMENSIONS SHOWN ARE NOMINAL (IN MILLIMETERS), U.N.O.
2. WELD SIZESHALL BE AISC MINIMUM OF 6 mm UNLESS NOTED OTHERWISE.
3. ALL FIELD WELDS SHALL BE INSPECTED PER QUALITY ASSURANCE AND SPECIAL INSPECTIONS.

REFERENCE DRAWINGS

1	93M-BOA-NAT-LOT-04833
2	93M-BOA-NAT-LOT-09170
3	93M-BOA-NAT-LOT-01976
4	93M-BOA-NAT-LOT-20021
5	
6	
7	
8	
9	

6TH OF OCTOBER CITY RAIL TRANSIT MONORAIL

The Authority | Hill International Consultant | Main Contractor | Structural Designer

KEY PLAN:

SCALE	SHOP DRAWING	DATE
AS SHOWN		08/29/2023

DRAWING TITLE
6TH OF OCTOBER MONORAIL
SERVICE WALKWAYS
ZONE(1016)
Z16-HR028

REV	DATE	DSG	CHK	APP	AMENDMENTS	STATUS
B	08/29/2023	MAH	MAH	DRAW	ISSUED FOR INFORMATION	IFI
A	08/11/2022	MAH	MAH	DRAW	ISSUED FOR INFORMATION	IFI

Project Code	Rubric	Initiator	Lot	Ref	Number	Revision
93M	0476	ACC	60DEP	DWG	1614	B

Tekla structures

Approval is subject to approval of coordination package between multi-discipline.

REVIEWED WITH COMMENT
MONORAILS PROJECT

Length & Area & Weight per piece						
Z16-HR027	CHS48.3*4.0	S235JR	1	5000.1	0.75	21.9
Mark	Profile	Grade	QTY	Length	Area	Weight

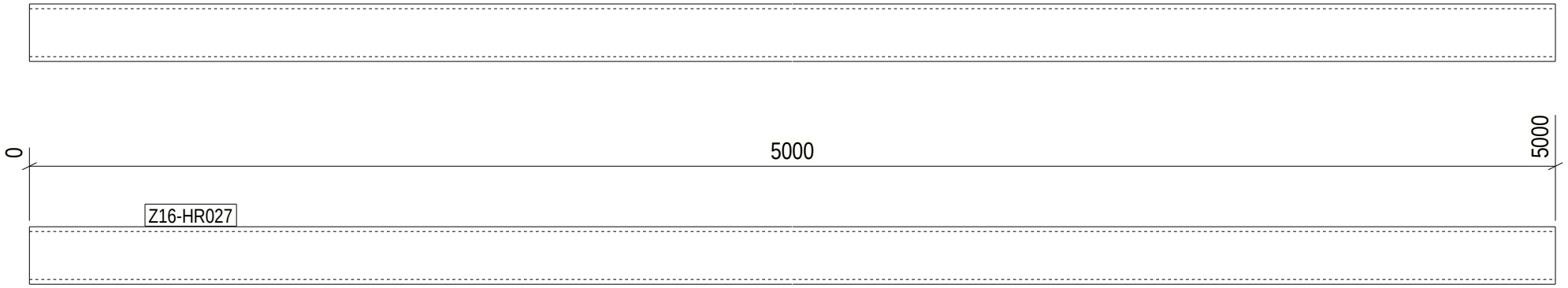

1 REQ'D AS DRAWN MK'D Z16-HR027

6 October Monorail
Engineering Unit
Valid For Construction

GENERAL NOTES:

1. THE DIMENSIONS SHOWN ARE NOMINAL (IN MILLIMETERS), U.N.O.
2. WELD SIZESHALL BE AISC MINIMUM OF 6 mm UNLESS NOTED OTHERWISE.
3. ALL FIELD WELDS SHALL BE INSPECTED PER QUALITY ASSURANCE AND SPECIAL INSPECTIONS.

REFERENCE DRAWINGS

1	93M-BOA-NAT-LOT-04833
2	93M-BOA-NAT-LOT-09170
3	93M-BOA-NAT-LOT-01976
4	93M-BOA-NAT-LOT-20021
5	
6	
7	
8	
9	

6TH OF OCTOBER CITY RAIL TRANSIT MONORAIL

The Authority | Hill International Consultant | Main Contractor | Structural Designer

KEY PLAN:

SCALE: AS SHOWN | SHOP DRAWING | DATE: 08/29/2023

DRAWING TITLE: 6TH OF OCTOBER MONORAIL SERVICE WALKWAYS ZONE(1016) Z16-HR027

REV	DATE	DSG	CHK	APP	AMENDMENTS	STATUS
B	08/29/2023	MAH	MAH	DRAW	ISSUED FOR INFORMATION	IFI
A	06/11/2022	MAH	MAH	DRAW	ISSUED FOR INFORMATION	IFI

Project Code	Rubric	Initiator	Lot	Ref	Number	Revision
9 3 M	0 4 7 6	A C C	6 0 D E P	D W G	1 6 1 6 5	B

Tekla structures

Approval is subject to approval of coordination package between multi-discipline.

REVIEWED WITH COMMENT
MONORAILS PROJECT

Length & Area & Weight per piece						
Z16-HR026	CHS48.3*4.0	S235JR	1	4997.0	0.75	21.8
Mark	Profile	Grade	QTY	Length	Area	Weight

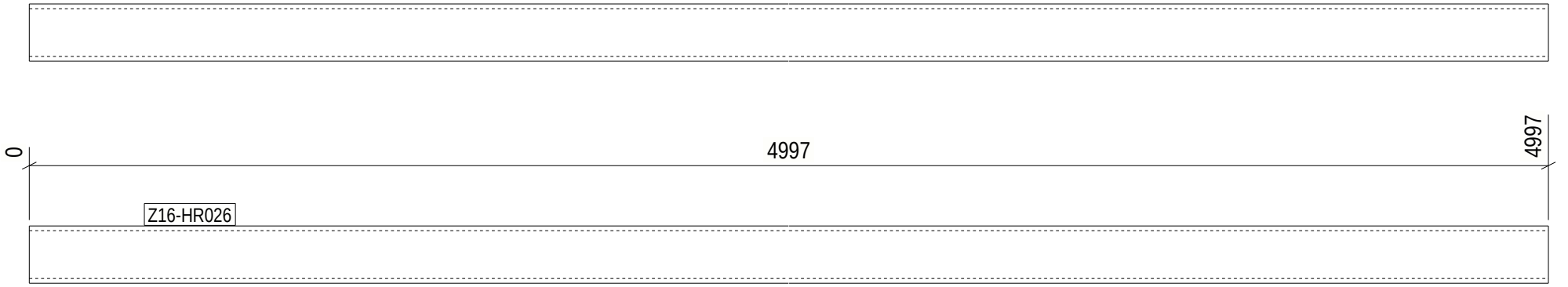

1 REQ'D AS DRAWN MK'D Z16-HR026

6 October Monorail
Engineering Unit
Valid For Construction

GENERAL NOTES:

1. THE DIMENSIONS SHOWN ARE NOMINAL (IN MILLIMETERS), U.N.O.
2. WELD SIZESHALL BE AISC MINIMUM OF 6 mm UNLESS NOTED OTHERWISE.
3. ALL FIELD WELDS SHALL BE INSPECTED PER QUALITY ASSURANCE AND SPECIAL INSPECTIONS.

REFERENCE DRAWINGS

1	93M-BOA-NAT-LOT-04833
2	93M-BOA-NAT-LOT-09170
3	93M-BOA-NAT-LOT-01976
4	93M-BOA-NAT-LOT-20021
5	
6	
7	
8	
9	

6TH OF OCTOBER CITY RAIL TRANSIT MONORAIL

The Authority | Hill International Consultant | Main Contractor | Structural Designer

KEY PLAN:

REV	DATE	DSG	CHK	APP	AMENDMENTS	STATUS
B	08/29/2023	MAH	MAH	DRAW	ISSUED FOR INFORMATION	IFI
A	08/11/2022	MAH	MAH	DRAW	ISSUED FOR INFORMATION	IFI

SCALE: AS SHOWN | SHOP DRAWING | DATE: 08/29/2023

DRAWING TITLE: 6TH OF OCTOBER MONORAIL SERVICE WALKWAYS ZONE(1016) Z16-HR026

Project Code	Rubric	Initiator	Lot	Ref	Number	Revision
93M	0476	ACC60	DEP	DWG	1616	B

Tekla structures

Approval is subject to approval of coordination package between multi-discipline.

REVIEWED WITH COMMENT MONORAILS PROJECT

Length & Area & Weight per piece						
Z16-HR025	CHS48.3*4.0	S235JR	1	5966.9	0.90	26.1
Mark	Profile	Grade	QTY	Length	Area	Weight

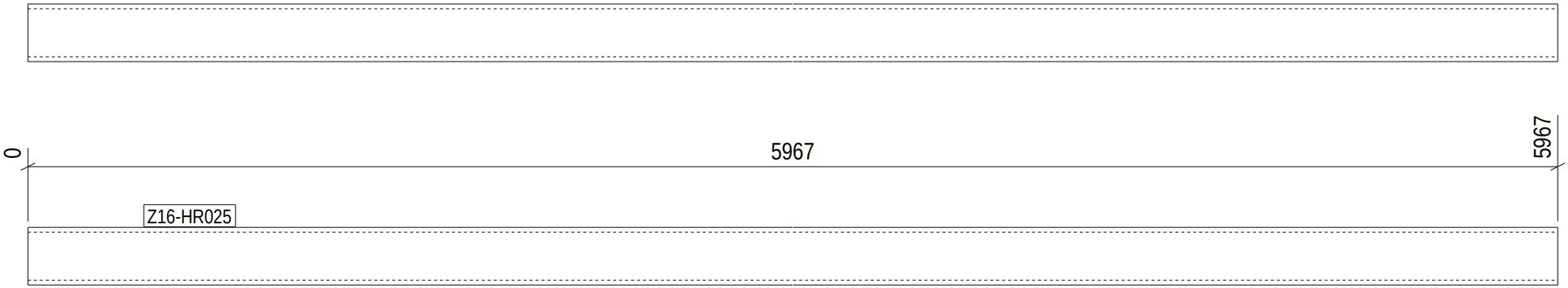

1 REQ'D AS DRAWN MK'D Z16-HR025

6 October Monorail Engineering Unit Valid For Construction

GENERAL NOTES:

1. THE DIMENSIONS SHOWN ARE NOMINAL (IN MILLIMETERS), U.N.O.
2. WELD SIZESHALL BE AISC MINIMUM OF 6 mm UNLESS NOTED OTHERWISE.
3. ALL FIELD WELDS SHALL BE INSPECTED PER QUALITY ASSURANCE AND SPECIAL INSPECTIONS.

REFERENCE DRAWINGS

1	93M-BOA-NAT-LOT-04833
2	93M-BOA-NAT-LOT-09170
3	93M-BOA-NAT-LOT-01976
4	93M-BOA-NAT-LOT-20021
5	
6	
7	
8	
9	

6TH OF OCTOBER CITY RAIL TRANSIT MONORAIL

The Authority | Hill International Consultant | Main Contractor | Structural Designer

KEY PLAN:

SCALE: AS SHOWN | SHOP DRAWING | DATE: 08/29/2023

DRAWING TITLE: 6TH OF OCTOBER MONORAIL SERVICE WALKWAYS ZONE(1016) Z16-HR025

REV	DATE	DSG	CHK	APP	AMENDMENTS	STATUS
B	08/29/2023	MAH	MAH	DRAW	ISSUED FOR INFORMATION	IFI
A	08/11/2022	MAH	MAH	DRAW	ISSUED FOR INFORMATION	IFI

Project Code	Rubric	Initiator	Lot	Ref	Number	Revision
9 3 M	0 4 7 6	A C C	6 0 D E P	D W G	1 6 1 6 7	B

Tekla structures

Approval is subject to approval of coordination package between multi-discipline.

REVIEWED WITH COMMENT
MONORAILS PROJECT

Length & Area & Weight per piece

Mark	Profile	Grade	QTY	Length	Area	Weight
Z16-HR024	CHS48.3*4.0	S235JR	1	2391.4	0.36	10.5

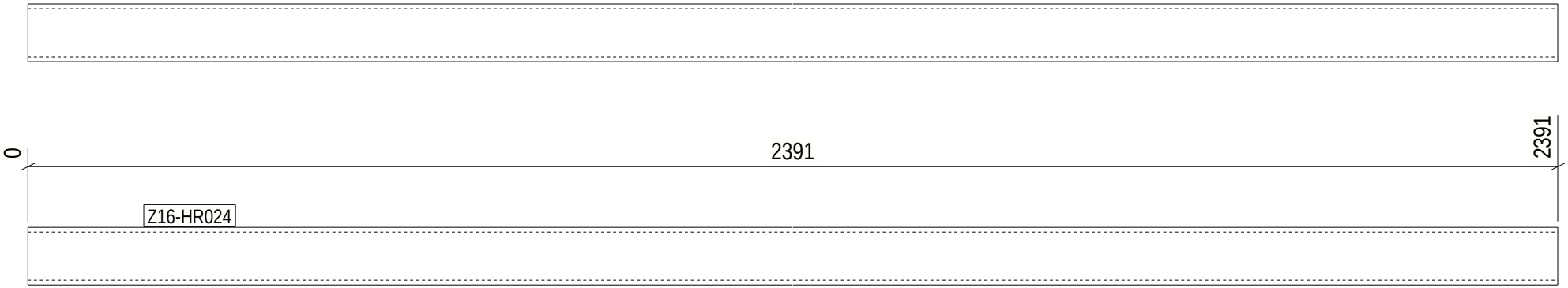

1 REQ'D AS DRAWN MK'D Z16-HR024

6 October Monorail
Engineering Unit
Valid For Construction

GENERAL NOTES:

1. THE DIMENSIONS SHOWN ARE NOMINAL (IN MILLIMETERS), U.N.O.
2. WELD SIZESHALL BE AISC MINIMUM OF 6 mm UNLESS NOTED OTHERWISE.
3. ALL FIELD WELDS SHALL BE INSPECTED PER QUALITY ASSURANCE AND SPECIAL INSPECTIONS.

REFERENCE DRAWINGS

1	93M-BOA-NAT-LOT-04833
2	93M-BOA-NAT-LOT-09170
3	93M-BOA-NAT-LOT-01976
4	93M-BOA-NAT-LOT-20021
5	
6	
7	
8	
9	

6TH OF OCTOBER CITY RAIL TRANSIT MONORAIL

The Authority | Hill International Consultant | Main Contractor | Structural Designer

KEY PLAN:

SCALE: AS SHOWN | SHOP DRAWING | DATE: 08/29/2023

DRAWING TITLE: 6TH OF OCTOBER MONORAIL SERVICE WALKWAYS ZONE(1016) Z16-HR024

REV	DATE	DSG	CHK	APP	AMENDMENTS	STATUS
B	08/29/2023	MAH	MAH	DRAW	ISSUED FOR INFORMATION	IFI
A	08/11/2022	MAH	MAH	DRAW	ISSUED FOR INFORMATION	IFI

Project Code	Rubric	Initiator	Lot	Ref	Number	Revision
9 3 M	0 4 7 6	A C C	6 0 D E P	D W G	1 6 1 6 8	B

Tekla structures

Approval is subject to approval of coordination package between multi-discipline.

REVIEWED WITH COMMENT
MONORAILS PROJECT

Length & Area & Weight per piece						
Z16-HR023	CHS48.3*4.0	S235JR	1	2215.6	0.33	9.7
Mark	Profile	Grade	QTY	Length	Area	Weight

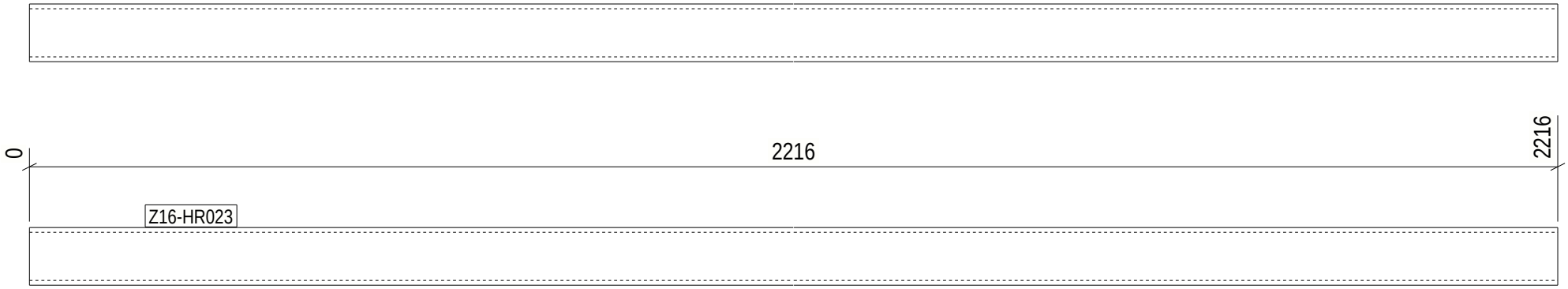

1 REQ'D AS DRAWN MK'D Z16-HR023

6 October Monorail
Engineering Unit
Valid For Construction

Tekla structures

GENERAL NOTES:

1. THE DIMENSIONS SHOWN ARE NOMINAL (IN MILLIMETERS), U.N.O.
2. WELD SIZESHALL BE AISC MINIMUM OF 6 mm UNLESS NOTED OTHERWISE.
3. ALL FIELD WELDS SHALL BE INSPECTED PER QUALITY ASSURANCE AND SPECIAL INSPECTIONS.

REFERENCE DRAWINGS

1	93M-BOA-NAT-LOT-04833
2	93M-BOA-NAT-LOT-09170
3	93M-BOA-NAT-LOT-01976
4	93M-BOA-NAT-LOT-20021
5	
6	
7	
8	
9	

6TH OF OCTOBER CITY RAIL TRANSIT MONORAIL

The Authority | Hill International Consultant | Main Contractor | Structural Designer

KEY PLAN:

SCALE	SHOP DRAWING	DATE
AS SHOWN		08/29/2023

DRAWING TITLE
6TH OF OCTOBER MONORAIL
SERVICE WALKWAYS
ZONE(1016)
Z16-HR023

REV	DATE	DSG	CHK	APP	AMENDMENTS	STATUS
B	08/29/2023	MAH	MAH	DRAW	ISSUED FOR INFORMATION	IFI
A	08/11/2022	MAH	MAH	DRAW	ISSUED FOR INFORMATION	IFI

Project Code	Rubric	Initiator	Lot	Ref	Number	Revision
9 3 M	0 4 7 6	A C C	6 0 D E P	D W G	1 6 1 6 9	B

Approval is subject to approval of coordination package between multi-discipline.

REVIEWED WITH COMMENT
MONORAILS PROJECT

Length & Area & Weight per piece						
Z16-HR022	CHS48.3*4.0	S235JR	1	2970.2	0.45	13.0
Mark	Profile	Grade	QTY	Length	Area	Weight

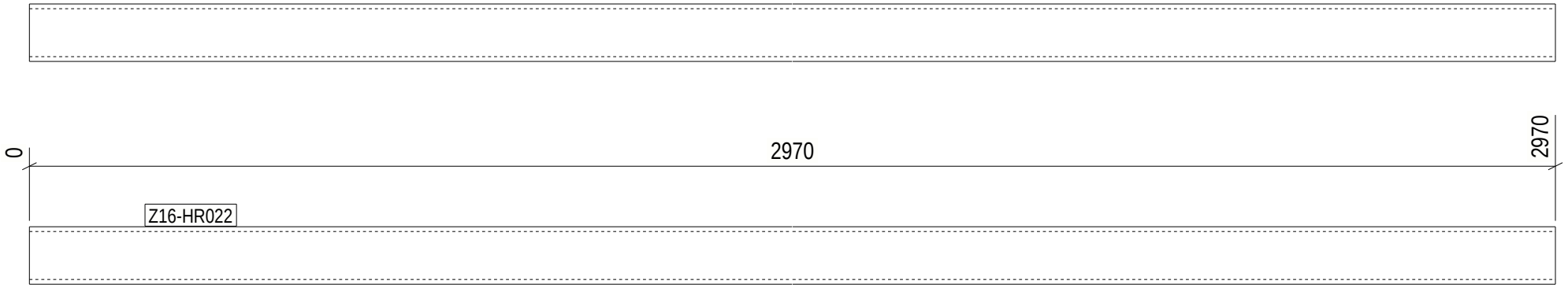

1 REQ'D AS DRAWN MK'D Z16-HR022

6 October Monorail
Engineering Unit
Valid For Construction

GENERAL NOTES:

1. THE DIMENSIONS SHOWN ARE NOMINAL (IN MILLIMETERS), U.N.O.
2. WELD SIZESHALL BE AISC MINIMUM OF 6 mm UNLESS NOTED OTHERWISE.
3. ALL FIELD WELDS SHALL BE INSPECTED PER QUALITY ASSURANCE AND SPECIAL INSPECTIONS.

REFERENCE DRAWINGS

1	93M-BOA-NAT-LOT-04833
2	93M-BOA-NAT-LOT-09170
3	93M-BOA-NAT-LOT-01976
4	93M-BOA-NAT-LOT-20021
5	
6	
7	
8	
9	

6TH OF OCTOBER CITY RAIL TRANSIT MONORAIL

The Authority | Hill International Consultant | Main Contractor | Structural Designer

KEY PLAN:

SCALE: AS SHOWN | SHOP DRAWING | DATE: 08/29/2023

DRAWING TITLE: 6TH OF OCTOBER MONORAIL SERVICE WALKWAYS ZONE(1016) Z16-HR022

REV	DATE	DSG	CHK	APP	AMENDMENTS	STATUS
B	08/29/2023	MAH	MAH	DRAW	ISSUED FOR INFORMATION	IFI
A	08/11/2022	MAH	MAH	DRAW	ISSUED FOR INFORMATION	IFI

Project Code	Rubric	Initiator	Lot	Ref	Number	Revision
9 3 M	0 4 7 6	A C C	6 0 D E P	D W G	1 6 1 7 0	B

Tekla structures

Approval is subject to approval of coordination package between multi-discipline.

REVIEWED WITH COMMENT
MONORAILS PROJECT

Length & Area & Weight per piece						
Z16-HR021	CHS48.3*4.0	S235JR	1	3021.0	0.45	13.2
Mark	Profile	Grade	QTY	Length	Area	Weight

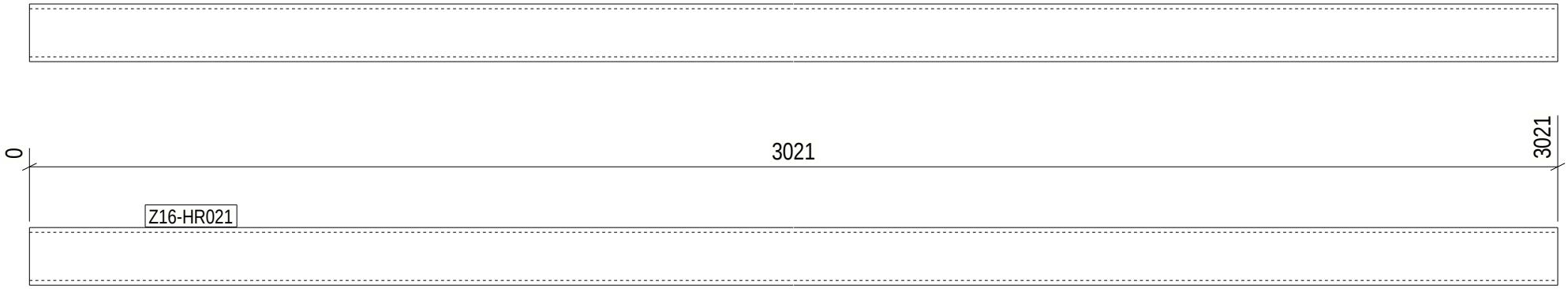

1 REQ'D AS DRAWN MK'D Z16-HR021

6 October Monorail
Engineering Unit
Valid For Construction

GENERAL NOTES:

1. THE DIMENSIONS SHOWN ARE NOMINAL (IN MILLIMETERS), U.N.O.
2. WELD SIZESHALL BE AISC MINIMUM OF 6 mm UNLESS NOTED OTHERWISE.
3. ALL FIELD WELDS SHALL BE INSPECTED PER QUALITY ASSURANCE AND SPECIAL INSPECTIONS.

REFERENCE DRAWINGS

1	93M-BOA-NAT-LOT-04833
2	93M-BOA-NAT-LOT-09170
3	93M-BOA-NAT-LOT-01976
4	93M-BOA-NAT-LOT-20021
5	
6	
7	
8	
9	

6TH OF OCTOBER CITY RAIL TRANSIT MONORAIL

The Authority | Hill International Consultant | Main Contractor | Structural Designer

KEY PLAN:

SCALE: AS SHOWN | SHOP DRAWING | DATE: 08/29/2023

DRAWING TITLE: 6TH OF OCTOBER MONORAIL SERVICE WALKWAYS ZONE(1016) Z16-HR021

REV	DATE	DSG	CHK	APP	AMENDMENTS	STATUS
B	08/29/2023	MAH	MAH	DRAW	ISSUED FOR INFORMATION	IFI
A	08/11/2022	MAH	MAH	DRAW	ISSUED FOR INFORMATION	IFI

Project Code	Rubric	Initiator	Lot	Ref	Number	Revision
9 3 M	0 4 7 6	A C C	6 0 D E P	D W G	1 6 1 7 1	B

Tekla structures

Approval is subject to approval of coordination package between multi-discipline.

REVIEWED WITH COMMENT
MONORAILS PROJECT

Length & Area & Weight per piece						
Z16-HR020	CHS48.3*4.0	S235JR	4	5997.5	0.90	26.2
Mark	Profile	Grade	QTY	Length	Area	Weight

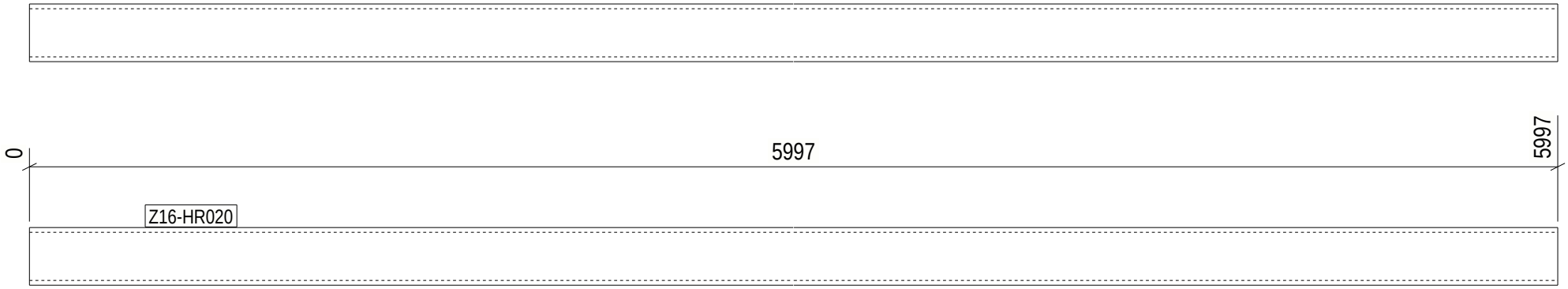

4 REQ'D AS DRAWN MK'D Z16-HR020

6 October Monorail
Engineering Unit
Valid For Construction

GENERAL NOTES:

1. THE DIMENSIONS SHOWN ARE NOMINAL (IN MILLIMETERS), U.N.O.
2. WELD SIZESHALL BE AISC MINIMUM OF 6 mm UNLESS NOTED OTHERWISE.
3. ALL FIELD WELDS SHALL BE INSPECTED PER QUALITY ASSURANCE AND SPECIAL INSPECTIONS.

REFERENCE DRAWINGS

1	93M-BOA-NAT-LOT-04833
2	93M-BOA-NAT-LOT-09170
3	93M-BOA-NAT-LOT-01976
4	93M-BOA-NAT-LOT-20021
5	
6	
7	
8	
9	

6TH OF OCTOBER CITY RAIL TRANSIT MONORAIL

The Authority | Hill International Consultant | Main Contractor | Structural Designer

KEY PLAN:

SCALE: AS SHOWN | SHOP DRAWING | DATE: 08/29/2023

DRAWING TITLE: 6TH OF OCTOBER MONORAIL SERVICE WALKWAYS ZONE(1016) Z16-HR020

REV	DATE	DSG	CHK	APP	AMENDMENTS	STATUS
B	08/29/2023	MAH	MAH	DRAW	ISSUED FOR INFORMATION	IFI
A	08/11/2022	MAH	MAH	DRAW	ISSUED FOR INFORMATION	IFI

Project Code	Rubric	Initiator	Lot	Ref	Number	Revision
9 3 M	0 4 7 6	A C C	6 0 D E P	D W G	1 6 1 7 2	B

Tekla structures

Approval is subject to approval of coordination package between multi-discipline.

REVIEWED WITH COMMENT
MONORAILS PROJECT

Length & Area & Weight per piece						
Z16-HR019	CHS48.3*4.0	S235JR	1	2381.2	0.36	10.4
Mark	Profile	Grade	QTY	Length	Area	Weight

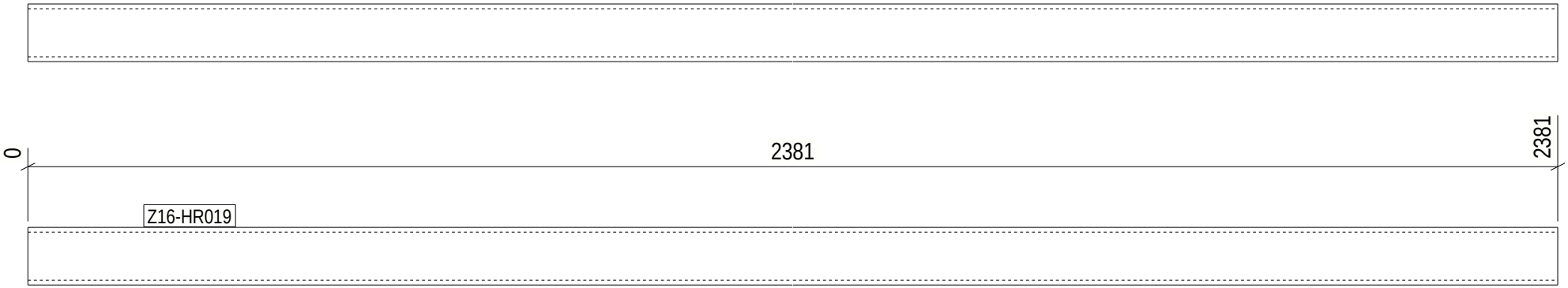

1 REQ'D AS DRAWN MK'D Z16-HR019

6 October Monorail
Engineering Unit
Valid For Construction

GENERAL NOTES:

1. THE DIMENSIONS SHOWN ARE NOMINAL (IN MILLIMETERS), U.N.O.
2. WELD SIZESHALL BE AISC MINIMUM OF 6 mm UNLESS NOTED OTHERWISE.
3. ALL FIELD WELDS SHALL BE INSPECTED PER QUALITY ASSURANCE AND SPECIAL INSPECTIONS.

REFERENCE DRAWINGS

1	93M-BOA-NAT-LOT-04833
2	93M-BOA-NAT-LOT-09170
3	93M-BOA-NAT-LOT-01976
4	93M-BOA-NAT-LOT-20021
5	
6	
7	
8	
9	

6TH OF OCTOBER CITY RAIL TRANSIT MONORAIL

The Authority | Hill International Consultant | Main Contractor | Structural Designer

KEY PLAN:

SCALE: AS SHOWN | SHOP DRAWING | DATE: 08/29/2023

DRAWING TITLE: 6TH OF OCTOBER MONORAIL SERVICE WALKWAYS ZONE(1016) Z16-HR019

REV	DATE	DSG	CHK	APP	AMENDMENTS	STATUS
B	08/29/2023	MAH	MAH	DRAW	ISSUED FOR INFORMATION	IFI
A	08/11/2022	MAH	MAH	DRAW	ISSUED FOR INFORMATION	IFI

Project Code	Rubric	Initiator	Lot	Ref	Number	Revision
9 3 M	0 4 7 6	A C C	6 0 D E P	D W G	1 6 1 7 3	B

Tekla structures

Approval is subject to approval of coordination package between multi-discipline.

REVIEWED WITH COMMENT
MONORAILS PROJECT

Length & Area & Weight per piece						
Z16-HR018	CHS48.3*4.0	S235JR	1	3566.2	0.53	15.6
Mark	Profile	Grade	QTY	Length	Area	Weight

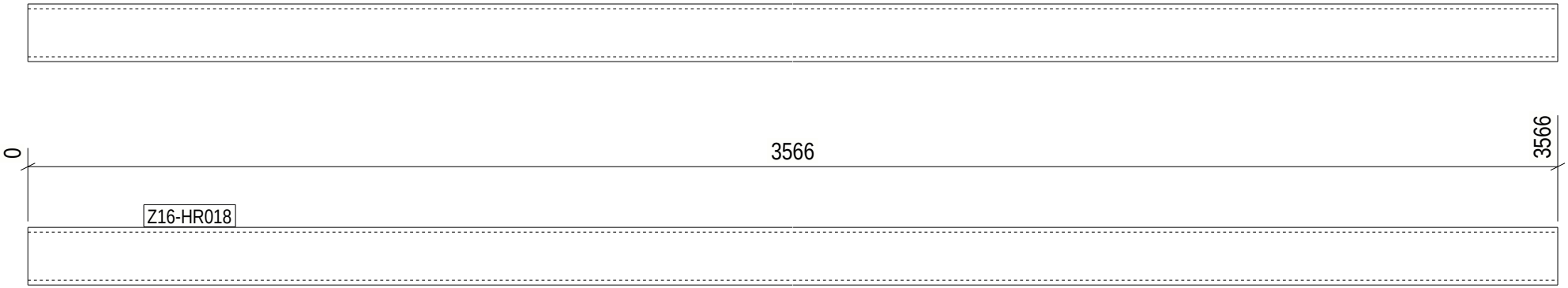

1 REQ'D AS DRAWN MK'D Z16-HR018

6 October Monorail
Engineering Unit
Valid For Construction

GENERAL NOTES:

1. THE DIMENSIONS SHOWN ARE NOMINAL (IN MILLIMETERS), U.N.O.
2. WELD SIZESHALL BE AISC MINIMUM OF 6 mm UNLESS NOTED OTHERWISE.
3. ALL FIELD WELDS SHALL BE INSPECTED PER QUALITY ASSURANCE AND SPECIAL INSPECTIONS.

REFERENCE DRAWINGS

1	93M-BOA-NAT-LOT-04833
2	93M-BOA-NAT-LOT-09170
3	93M-BOA-NAT-LOT-01976
4	93M-BOA-NAT-LOT-20021
5	
6	
7	
8	
9	

6TH OF OCTOBER CITY RAIL TRANSIT MONORAIL

The Authority | Hill International Consultant | Main Contractor | Structural Designer

KEY PLAN:

REV	DATE	DSG	CHK	APP	AMENDMENTS	STATUS
B	08/29/2023	MAH	MAH	DRAW	ISSUED FOR INFORMATION	IFI
A	08/11/2022	MAH	MAH	DRAW	ISSUED FOR INFORMATION	IFI

SCALE: AS SHOWN | SHOP DRAWING | DATE: 08/29/2023

DRAWING TITLE: 6TH OF OCTOBER MONORAIL SERVICE WALKWAYS ZONE(1016) Z16-HR018

Project Code	Rubric	Initiator	Lot	Ref	Number	Revision
9 3 M	0 4 7 6	A C C	6 0 D E P	D W G	1 6 1 7 4	B

Tekla structures

Approval is subject to approval of coordination package between multi-discipline.

REVIEWED WITH COMMENT
MONORAILS PROJECT

Length & Area & Weight per piece						
Z16-HR017	CHS48.3*4.0	S235JR	1	2495.5	0.37	10.9
Mark	Profile	Grade	QTY	Length	Area	Weight

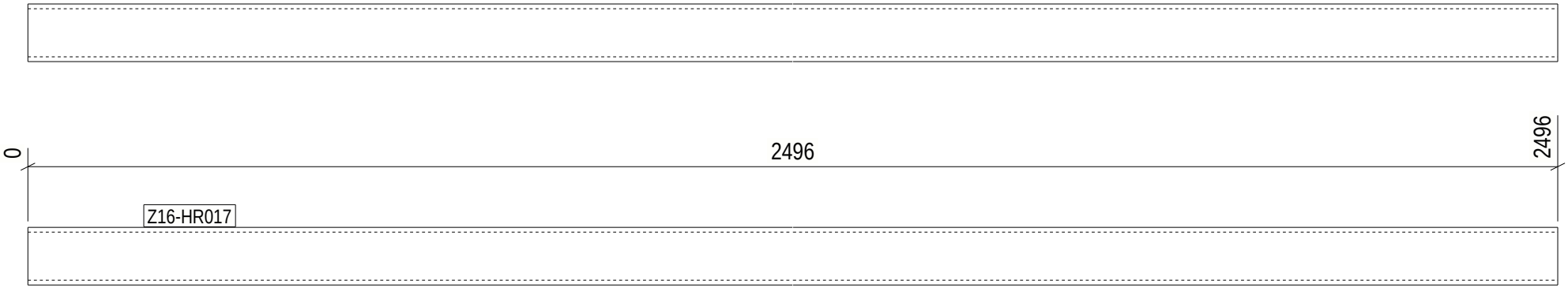

1 REQ'D AS DRAWN MK'D Z16-HR017

6 October Monorail
Engineering Unit
Valid For Construction

GENERAL NOTES:

1. THE DIMENSIONS SHOWN ARE NOMINAL (IN MILLIMETERS), U.N.O.
2. WELD SIZESHALL BE AISC MINIMUM OF 6 mm UNLESS NOTED OTHERWISE.
3. ALL FIELD WELDS SHALL BE INSPECTED PER QUALITY ASSURANCE AND SPECIAL INSPECTIONS.

REFERENCE DRAWINGS

1	93M-BOA-NAT-LOT-04833
2	93M-BOA-NAT-LOT-09170
3	93M-BOA-NAT-LOT-01976
4	93M-BOA-NAT-LOT-20021
5	
6	
7	
8	
9	

6TH OF OCTOBER CITY RAIL TRANSIT MONORAIL

The Authority | Hill International Consultant | Main Contractor | Structural Designer

KEY PLAN:

SCALE	SHOP DRAWING	DATE
AS SHOWN		08/29/2023

DRAWING TITLE

6TH OF OCTOBER MONORAIL
SERVICE WALKWAYS
ZONE(1016)
Z16-HR017

REV	DATE	DSG	CHK	APP	AMENDMENTS	STATUS
B	08/29/2023	MAH	MAH	DRAW	ISSUED FOR INFORMATION	IFI
A	08/11/2022	MAH	MAH	DRAW	ISSUED FOR INFORMATION	IFI

Project Code	Rubric	Initiator	Lot	Ref	Number	Revision
9 3 M	0 4 7 6	A C C	6 0 D E P	D W G	1 6 1 7 5	B

Tekla structures

Approval is subject to approval of coordination package between multi-discipline.

REVIEWED WITH COMMENT
MONORAILS PROJECT

Length & Area & Weight per piece						
Z16-HR016	CHS48.3*4.0	S235JR	1	2982.3	0.45	13.0
Mark	Profile	Grade	QTY	Length	Area	Weight

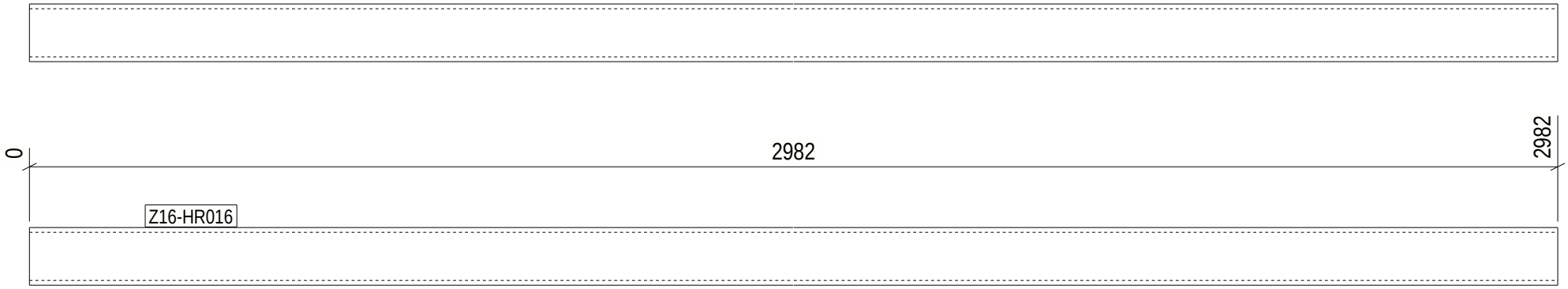

1 REQ'D AS DRAWN MK'D Z16-HR016

6 October Monorail
Engineering Unit
Valid For Construction

GENERAL NOTES:

1. THE DIMENSIONS SHOWN ARE NOMINAL (IN MILLIMETERS), U.N.O.
2. WELD SIZESHALL BE AISC MINIMUM OF 6 mm UNLESS NOTED OTHERWISE.
3. ALL FIELD WELDS SHALL BE INSPECTED PER QUALITY ASSURANCE AND SPECIAL INSPECTIONS.

REFERENCE DRAWINGS

1	93M-BOA-NAT-LOT-04833
2	93M-BOA-NAT-LOT-09170
3	93M-BOA-NAT-LOT-01976
4	93M-BOA-NAT-LOT-20021
5	
6	
7	
8	
9	

6TH OF OCTOBER CITY RAIL TRANSIT MONORAIL

The Authority | Hill International Consultant | Main Contractor | Structural Designer

KEY PLAN:

REV	DATE	DSG	CHK	APP	AMENDMENTS	STATUS
B	08/29/2023	MAH	MAH	DRAW	ISSUED FOR INFORMATION	IFI
A	08/11/2022	MAH	MAH	DRAW	ISSUED FOR INFORMATION	IFI

SCALE: AS SHOWN | SHOP DRAWING | DATE: 08/29/2023

DRAWING TITLE: 6TH OF OCTOBER MONORAIL SERVICE WALKWAYS ZONE(1016) Z16-HR016

Project Code	Rubric	Initiator	Lot	Ref	Number	Revision
9 3 M	0 4 7 6	A C C	6 0 D E P	D W G	1 6 1 7 6	B

Tekla structures

Approval is subject to approval of coordination package between multi-discipline.

REVIEWED WITH COMMENT
MONORAILS PROJECT

Length & Area & Weight per piece						
Z16-HR015	CHS48.3*4.0	S235JR	1	5996.5	0.90	26.2
Mark	Profile	Grade	QTY	Length	Area	Weight

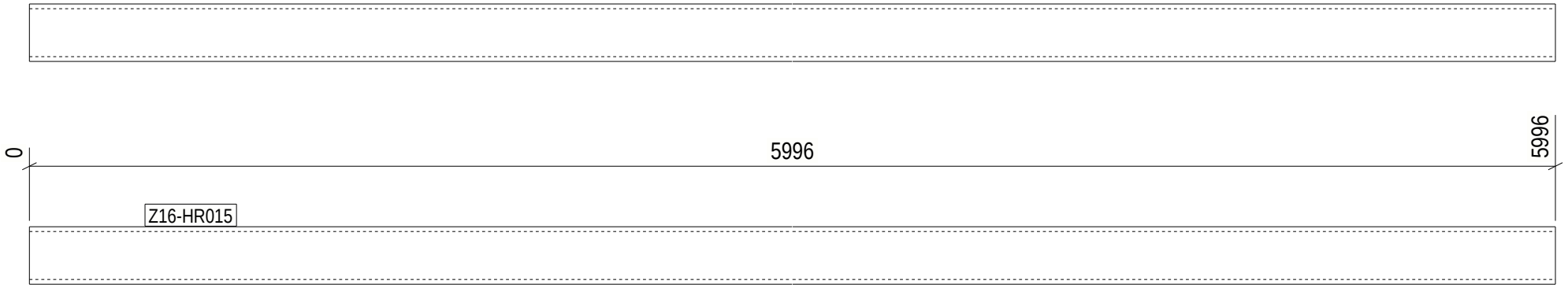

1 REQ'D AS DRAWN MK'D Z16-HR015

6 October Monorail
Engineering Unit
Valid For Construction

Tekla structures

GENERAL NOTES:

1. THE DIMENSIONS SHOWN ARE NOMINAL (IN MILLIMETERS), U.N.O.
2. WELD SIZESHALL BE AISC MINIMUM OF 6 mm UNLESS NOTED OTHERWISE.
3. ALL FIELD WELDS SHALL BE INSPECTED PER QUALITY ASSURANCE AND SPECIAL INSPECTIONS.

REFERENCE DRAWINGS

1	93M-BOA-NAT-LOT-04833
2	93M-BOA-NAT-LOT-09170
3	93M-BOA-NAT-LOT-01976
4	93M-BOA-NAT-LOT-20021
5	
6	
7	
8	
9	

6TH OF OCTOBER CITY RAIL TRANSIT MONORAIL

The Authority | Hill International Consultant | Main Contractor | Structural Designer

KEY PLAN:

SCALE: AS SHOWN | SHOP DRAWING | DATE: 08/29/2023

DRAWING TITLE: 6TH OF OCTOBER MONORAIL SERVICE WALKWAYS ZONE(1016) Z16-HR015

REV	DATE	DSG	CHK	APP	AMENDMENTS	STATUS
B	08/29/2023	MAH	MAH	DRAW	ISSUED FOR INFORMATION	IFI
A	08/11/2022	MAH	MAH	DRAW	ISSUED FOR INFORMATION	IFI

Project Code	Rubric	Initiator	Lot	Ref	Number	Revision
9 3 M	0 4 7 6	A C C	6 0 D E P	D W G	1 6 1 7 7	B

Approval is subject to approval of coordination package between multi-discipline.

REVIEWED WITH COMMENT
MONORAILS PROJECT

Length & Area & Weight per piece						
Z16-HR014	CHS48.3*4.0	S235JR	1	2427.0	0.36	10.6
Mark	Profile	Grade	QTY	Length	Area	Weight

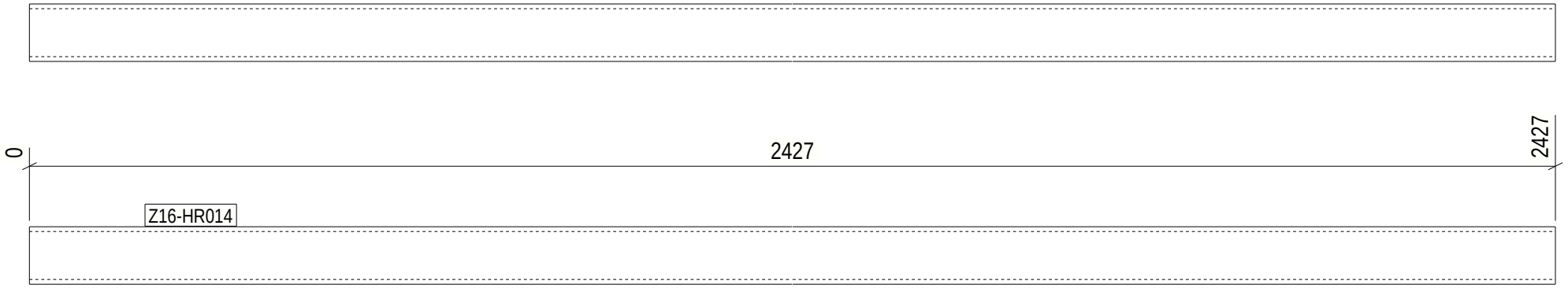

1 REQ'D AS DRAWN MK'D Z16-HR014

6 October Monorail
Engineering Unit
Valid For Construction

GENERAL NOTES:

1. THE DIMENSIONS SHOWN ARE NOMINAL (IN MILLIMETERS), U.N.O.
2. WELD SIZESHALL BE AISC MINIMUM OF 6 mm UNLESS NOTED OTHERWISE.
3. ALL FIELD WELDS SHALL BE INSPECTED PER QUALITY ASSURANCE AND SPECIAL INSPECTIONS.

REFERENCE DRAWINGS

1	93M-BOA-NAT-LOT-04833
2	93M-BOA-NAT-LOT-09170
3	93M-BOA-NAT-LOT-01976
4	93M-BOA-NAT-LOT-20021
5	
6	
7	
8	
9	

6TH OF OCTOBER CITY RAIL TRANSIT MONORAIL

The Authority | Hill International Consultant | Main Contractor | Structural Designer

KEY PLAN:

SCALE: AS SHOWN | SHOP DRAWING | DATE: 08/29/2023

DRAWING TITLE: 6TH OF OCTOBER MONORAIL SERVICE WALKWAYS ZONE(1016) Z16-HR014

REV	DATE	DSG	CHK	APP	AMENDMENTS	STATUS
B	08/29/2023	MAH	MAH	DRAW	ISSUED FOR INFORMATION	IFI
A	08/11/2022	MAH	MAH	DRAW	ISSUED FOR INFORMATION	IFI

Project Code	Rubric	Initiator	Lot	Ref	Number	Revision
9 3 M	0 4 7 6	A C C	6 0 D E P	D W G	1 6 1 7 8	B

Tekla structures

Approval is subject to approval of coordination package between multi-discipline.

REVIEWED WITH COMMENT
MONORAILS PROJECT

Length & Area & Weight per piece						
Z16-HR013	CHS48.3*4.0	S235JR	2	5997.9	0.90	26.2
Mark	Profile	Grade	QTY	Length	Area	Weight

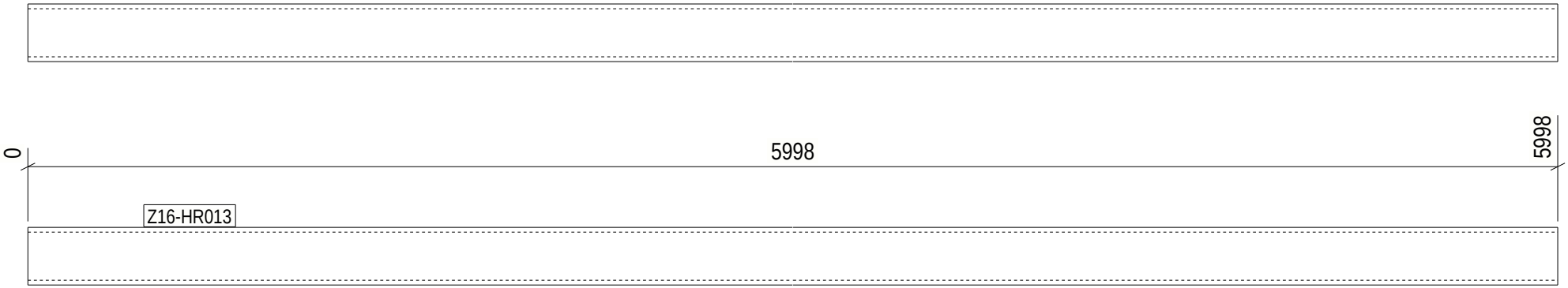

2 REQ'D AS DRAWN MK'D Z16-HR013

6 October Monorail
Engineering Unit
Valid For Construction

GENERAL NOTES:

1. THE DIMENSIONS SHOWN ARE NOMINAL (IN MILLIMETERS), U.N.O.
2. WELD SIZESHALL BE AISC MINIMUM OF 6 mm UNLESS NOTED OTHERWISE.
3. ALL FIELD WELDS SHALL BE INSPECTED PER QUALITY ASSURANCE AND SPECIAL INSPECTIONS.

REFERENCE DRAWINGS

1	93M-BOA-NAT-LOT-04833
2	93M-BOA-NAT-LOT-09170
3	93M-BOA-NAT-LOT-01976
4	93M-BOA-NAT-LOT-20021
5	
6	
7	
8	
9	

6TH OF OCTOBER CITY RAIL TRANSIT MONORAIL

The Authority | Hill International Consultant | Main Contractor | Structural Designer

KEY PLAN:

SCALE: AS SHOWN | SHOP DRAWING | DATE: 08/29/2023

DRAWING TITLE: 6TH OF OCTOBER MONORAIL SERVICE WALKWAYS ZONE(1016) Z16-HR013

REV	DATE	DSG	CHK	APP	AMENDMENTS	STATUS
B	08/29/2023	MAH	MAH	DRAW	ISSUED FOR INFORMATION	IFI
A	08/11/2022	MAH	MAH	DRAW	ISSUED FOR INFORMATION	IFI

Project Code	Rubric	Initiator	Lot	Ref	Number	Revision
9 3 M	0 4 7 6	A C C	6 0 D E P	D W G	1 6 1 7 9	B

Tekla structures

Approval is subject to approval of coordination package between multi-discipline.

REVIEWED WITH COMMENT
MONORAILS PROJECT

Length & Area & Weight per piece						
Z16-HR012	CHS48.3*4.0	S235JR	1	5994.3	0.90	26.2
Mark	Profile	Grade	QTY	Length	Area	Weight

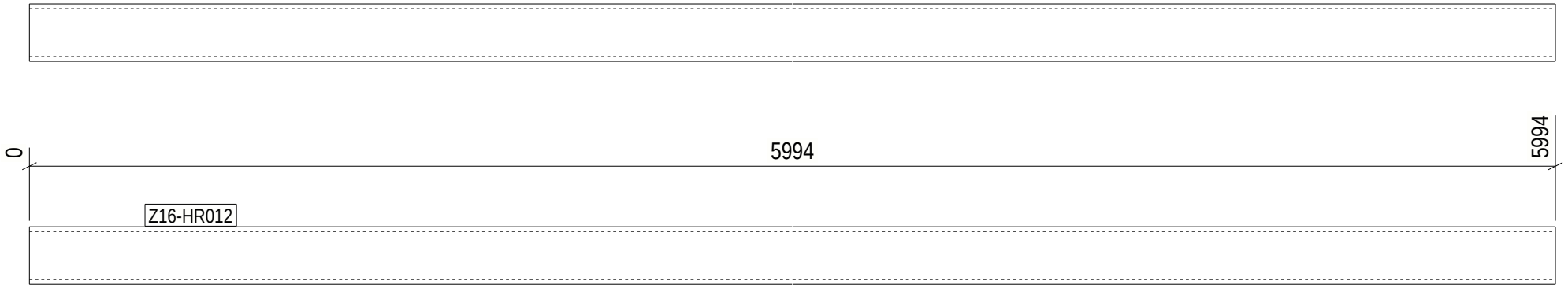

1 REQ'D AS DRAWN MK'D Z16-HR012

6 October Monorail
Engineering Unit
Valid For Construction

Tekla structures

GENERAL NOTES:

1. THE DIMENSIONS SHOWN ARE NOMINAL (IN MILLIMETERS), U.N.O.
2. WELD SIZESHALL BE AISC MINIMUM OF 6 mm UNLESS NOTED OTHERWISE.
3. ALL FIELD WELDS SHALL BE INSPECTED PER QUALITY ASSURANCE AND SPECIAL INSPECTIONS.

REFERENCE DRAWINGS

1	93M-BOA-NAT-LOT-04833
2	93M-BOA-NAT-LOT-09170
3	93M-BOA-NAT-LOT-01976
4	93M-BOA-NAT-LOT-20021
5	
6	
7	
8	
9	

6TH OF OCTOBER CITY RAIL TRANSIT MONORAIL

The Authority | Hill International Consultant | Main Contractor | Structural Designer

KEY PLAN:

SCALE	SHOP DRAWING	DATE
AS SHOWN		08/29/2023

DRAWING TITLE

6TH OF OCTOBER MONORAIL
SERVICE WALKWAYS
ZONE(1016)
Z16-HR012

REV	DATE	DSG	CHK	APP	AMENDMENTS	STATUS
B	08/29/2023	MAH	MAH	DRAW	ISSUED FOR INFORMATION	IFI
A	08/11/2022	MAH	MAH	DRAW	ISSUED FOR INFORMATION	IFI

Project Code	Rubric	Initiator	Lot	Ref	Number	Revision
9 3 M	0 4 7 6	A C C	6 0 D E P	D W G	1 6 1 8 0	B

Approval is subject to approval of coordination package between multi-discipline.

REVIEWED WITH COMMENT
MONORAILS PROJECT

Length & Area & Weight per piece						
Z16-HR011	CHS48.3*4.0	S235JR	1	5098.0	0.76	22.3
Mark	Profile	Grade	QTY	Length	Area	Weight

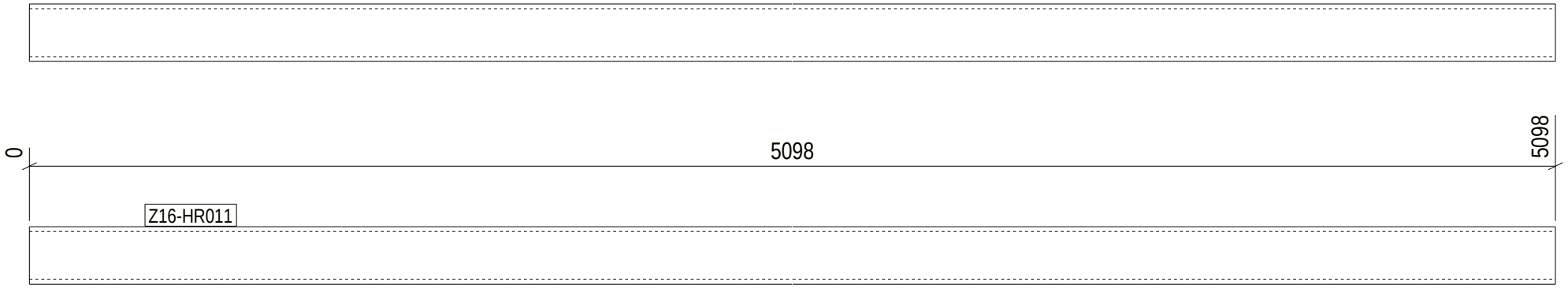

1 REQ'D AS DRAWN MK'D Z16-HR011

6 October Monorail
Engineering Unit
Valid For Construction

GENERAL NOTES:

1. THE DIMENSIONS SHOWN ARE NOMINAL (IN MILLIMETERS), U.N.O.
2. WELD SIZESHALL BE AISC MINIMUM OF 6 mm UNLESS NOTED OTHERWISE.
3. ALL FIELD WELDS SHALL BE INSPECTED PER QUALITY ASSURANCE AND SPECIAL INSPECTIONS.

REFERENCE DRAWINGS

1	93M-BOA-NAT-LOT-04833
2	93M-BOA-NAT-LOT-09170
3	93M-BOA-NAT-LOT-01976
4	93M-BOA-NAT-LOT-20021
5	
6	
7	
8	
9	

6TH OF OCTOBER CITY RAIL TRANSIT MONORAIL

The Authority | Hill International Consultant | Main Contractor | Structural Designer

KEY PLAN:

SCALE: AS SHOWN | SHOP DRAWING | DATE: 08/29/2023

DRAWING TITLE: 6TH OF OCTOBER MONORAIL SERVICE WALKWAYS ZONE(1016) Z16-HR011

REV	DATE	DSG	CHK	APP	AMENDMENTS	STATUS
B	08/29/2023	MAH	MAH	DRAW	ISSUED FOR INFORMATION	IFI
A	08/11/2022	MAH	MAH	DRAW	ISSUED FOR INFORMATION	IFI

Project Code	Rubric	Initiator	Lot	Ref	Number	Revision
9 3 M	0 4 7 6	A C C	6 0 D E P	D W G	1 6 1 8 1	B

Tekla structures

Approval is subject to approval of coordination package between multi-discipline.

REVIEWED WITH COMMENT
MONORAILS PROJECT

Length & Area & Weight per piece						
Z16-HR010	CHS48.3*4.0	S235JR	1	3008.6	0.45	13.2
Mark	Profile	Grade	QTY	Length	Area	Weight

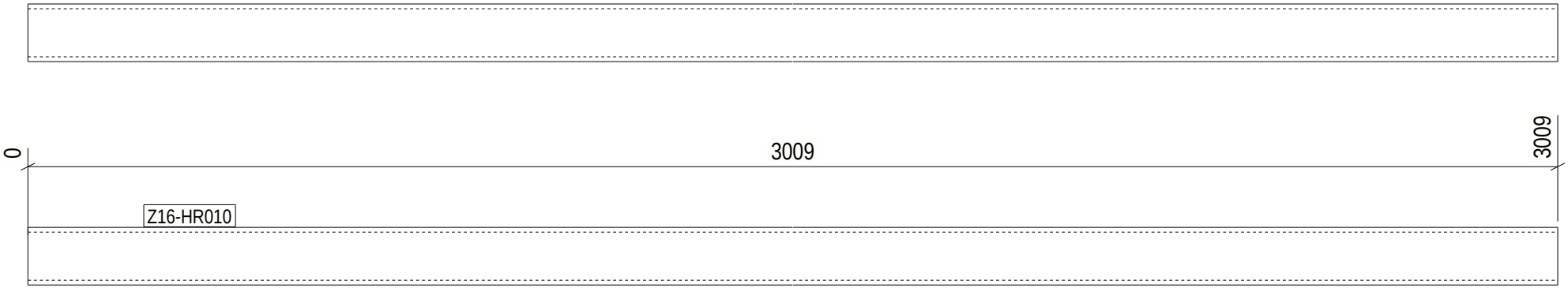

1 REQ'D AS DRAWN MK'D Z16-HR010

6 October Monorail
Engineering Unit
Valid For Construction

GENERAL NOTES:

1. THE DIMENSIONS SHOWN ARE NOMINAL (IN MILLIMETERS), U.N.O.
2. WELD SIZESHALL BE AISC MINIMUM OF 6 mm UNLESS NOTED OTHERWISE.
3. ALL FIELD WELDS SHALL BE INSPECTED PER QUALITY ASSURANCE AND SPECIAL INSPECTIONS.

REFERENCE DRAWINGS

1	93M-BOA-NAT-LOT-04833
2	93M-BOA-NAT-LOT-09170
3	93M-BOA-NAT-LOT-01976
4	93M-BOA-NAT-LOT-20021
5	
6	
7	
8	
9	

6TH OF OCTOBER CITY RAIL TRANSIT MONORAIL

The Authority | Hill International Consultant | Main Contractor | Structural Designer

KEY PLAN:

SCALE: AS SHOWN | SHOP DRAWING | DATE: 08/29/2023

DRAWING TITLE: 6TH OF OCTOBER MONORAIL SERVICE WALKWAYS ZONE(1016) Z16-HR010

REV	DATE	DSG	CHK	APP	AMENDMENTS	STATUS
B	08/29/2023	MAH	MAH	DRAW	ISSUED FOR INFORMATION	IFI
A	08/11/2022	MAH	MAH	DRAW	ISSUED FOR INFORMATION	IFI

Project Code	Rubric	Initiator	Lot	Ref	Number	Revision
9 3 M	0 4 7 6	A C C	6 0 D E P	D W G	1 6 1 8 2	B

Tekla structures

Approval is subject to approval of coordination package between multi-discipline.

REVIEWED WITH COMMENT
MONORAILS PROJECT

Length & Area & Weight per piece						
Z16-HR009	CHS48.3*4.0	S235JR	1	3001.0	0.45	13.1
Mark	Profile	Grade	QTY	Length	Area	Weight

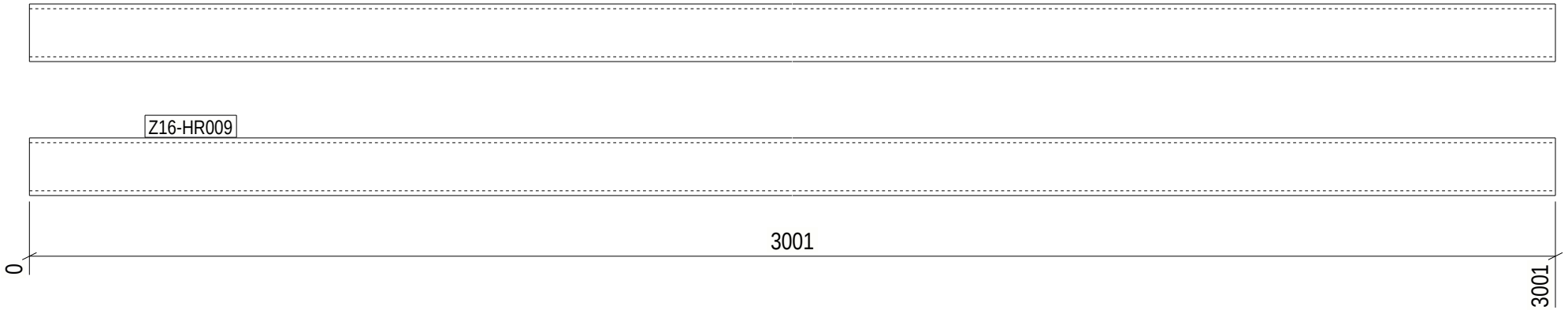

1 REQ'D AS DRAWN MK'D Z16-HR009

6 October Monorail
Engineering Unit
Valid For Construction

GENERAL NOTES:

1. THE DIMENSIONS SHOWN ARE NOMINAL (IN MILLIMETERS), U.N.O.
2. WELD SIZESHALL BE AISC MINIMUM OF 6 mm UNLESS NOTED OTHERWISE.
3. ALL FIELD WELDS SHALL BE INSPECTED PER QUALITY ASSURANCE AND SPECIAL INSPECTIONS.

REFERENCE DRAWINGS

1	93M-BOA-NAT-LOT-04833
2	93M-BOA-NAT-LOT-09170
3	93M-BOA-NAT-LOT-01976
4	93M-BOA-NAT-LOT-20021
5	
6	
7	
8	
9	

6TH OF OCTOBER CITY RAIL TRANSIT MONORAIL

The Authority — Hill International (Consultant) — Main Contractor — Structural Designer

KEY PLAN:

SCALE: AS SHOWN | SHOP DRAWING | DATE: 08/29/2023

DRAWING TITLE: 6TH OF OCTOBER MONORAIL SERVICE WALKWAYS ZONE(1016) Z16-HR009

REV	DATE	DSG	CHK	APP	AMENDMENTS	STATUS
B	08/29/2023	MAH	MAH	DRAW	ISSUED FOR INFORMATION	IFI
A	08/11/2022	MAH	MAH	DRAW	ISSUED FOR INFORMATION	IFI

Project Code	Rubric	Initiator	Lot	Ref	Number	Revision
9 3 M	0 4 7 6	A C C	6 0 D E P	D W G	1 6 1 8 3	B

Tekla structures

Approval is subject to approval of coordination package between multi-discipline.

REVIEWED WITH COMMENT
MONORAILS PROJECT

Length & Area & Weight per piece						
Z16-HR008	CHS48.3*4.0	S235JR	1	2378.1	0.36	10.4
Mark	Profile	Grade	QTY	Length	Area	Weight

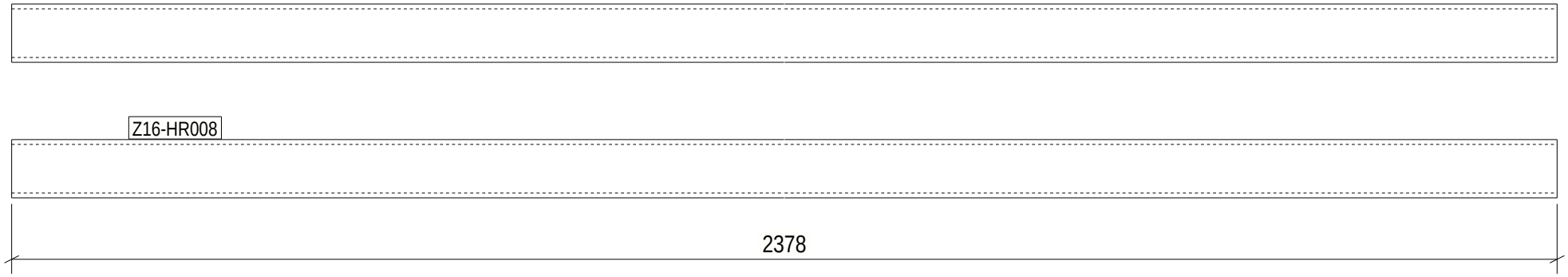

1 REQ'D AS DRAWN MK'D Z16-HR008

6 October Monorail
Engineering Unit
Valid For Construction

Tekla structures

GENERAL NOTES:

1. THE DIMENSIONS SHOWN ARE NOMINAL (IN MILLIMETERS), U.N.O.
2. WELD SIZESHALL BE AISC MINIMUM OF 6 mm UNLESS NOTED OTHERWISE.
3. ALL FIELD WELDS SHALL BE INSPECTED PER QUALITY ASSURANCE AND SPECIAL INSPECTIONS.

REFERENCE DRAWINGS

1	93M-BOA-NAT-LOT-04833
2	93M-BOA-NAT-LOT-09170
3	93M-BOA-NAT-LOT-01976
4	93M-BOA-NAT-LOT-20021
5	
6	
7	
8	
9	

6TH OF OCTOBER CITY RAIL TRANSIT MONORAIL

The Authority | Hill International Consultant | Main Contractor | Structural Designer

KEY PLAN:

SCALE: AS SHOWN | SHOP DRAWING | DATE: 08/29/2023

DRAWING TITLE: 6TH OF OCTOBER MONORAIL SERVICE WALKWAYS ZONE(1016) Z16-HR008

REV	DATE	DSG	CHK	APP	AMENDMENTS	STATUS
B	08/29/2023	MAH	MAH	DRAW	ISSUED FOR INFORMATION	IFI
A	08/11/2022	MAH	MAH	DRAW	ISSUED FOR INFORMATION	IFI

Project Code	Rubric	Initiator	Lot	Ref	Number	Revision
9 3 M	0 4 7 6	A C C	6 0 D E P	D W G	1 6 1 8 4	B

Approval is subject to approval of coordination package between multi-discipline.

REVIEWED WITH COMMENT
MONORAILS PROJECT

Length & Area & Weight per piece						
Z16-HR007	CHS48.3*4.0	S235JR	1	2997.5	0.45	13.1
Mark	Profile	Grade	QTY	Length	Area	Weight

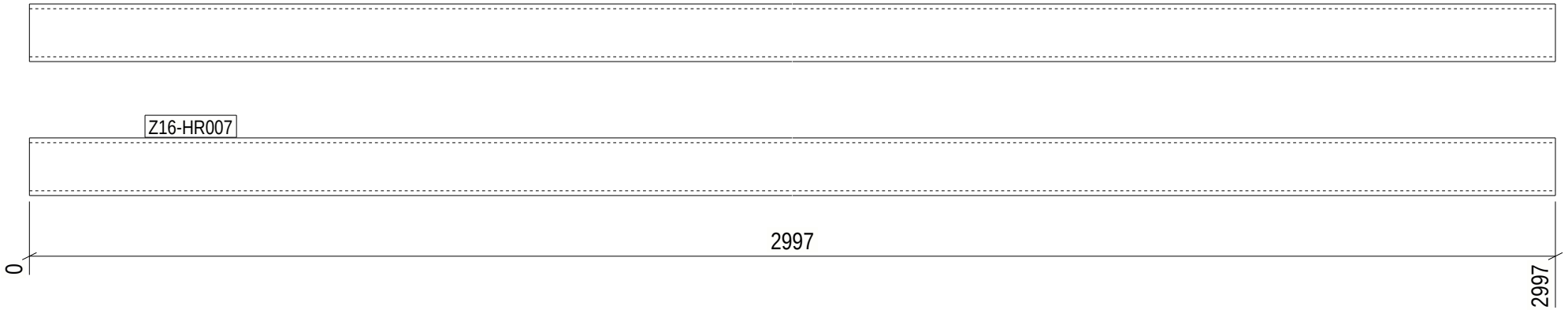

1 REQ'D AS DRAWN MK'D Z16-HR007

6 October Monorail
Engineering Unit
Valid For Construction

Tekla structures

GENERAL NOTES:

1. THE DIMENSIONS SHOWN ARE NOMINAL (IN MILLIMETERS), U.N.O.
2. WELD SIZESHALL BE AISC MINIMUM OF 6 mm UNLESS NOTED OTHERWISE.
3. ALL FIELD WELDS SHALL BE INSPECTED PER QUALITY ASSURANCE AND SPECIAL INSPECTIONS.

REFERENCE DRAWINGS

1	93M-BOA-NAT-LOT-04833
2	93M-BOA-NAT-LOT-09170
3	93M-BOA-NAT-LOT-01976
4	93M-BOA-NAT-LOT-20021
5	
6	
7	
8	
9	

6TH OF OCTOBER CITY RAIL TRANSIT MONORAIL

The Authority — Hill International Consultant — Main Contractor — Structural Designer

KEY PLAN:

SCALE: AS SHOWN | SHOP DRAWING | DATE: 08/29/2023

DRAWING TITLE: 6TH OF OCTOBER MONORAIL SERVICE WALKWAYS ZONE(1016) Z16-HR007

REV	DATE	DSG	CHK	APP	AMENDMENTS	STATUS
B	08/29/2023	MAH	MAH	DRAW	ISSUED FOR INFORMATION	IFI
A	08/11/2022	MAH	MAH	DRAW	ISSUED FOR INFORMATION	IFI

Project Code	Rubric	Initiator	Lot	Ref	Number	Revision
9 3 M	0 4 7 6	A C C	6 0 D E P	D W G	1 6 1 8 5	B

Approval is subject to approval of coordination package between multi-discipline.

REVIEWED WITH COMMENT MONORAILS PROJECT

Length & Area & Weight per piece						
Z16-HR006	CHS48.3*4.0	S235JR	1	3811.1	0.57	16.7
Mark	Profile	Grade	QTY	Length	Area	Weight

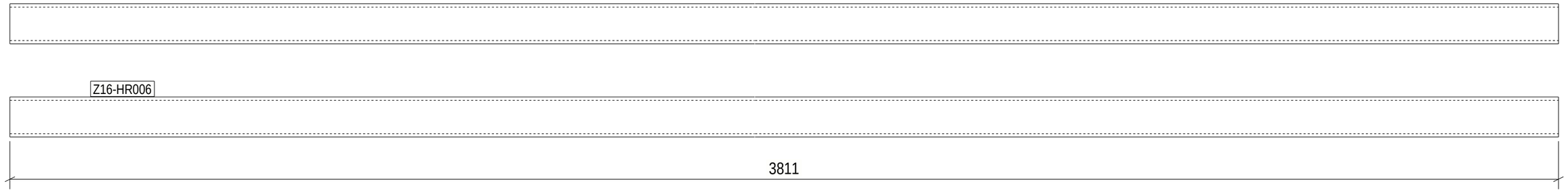

1 REQ'D AS DRAWN MK'D Z16-HR006

6 October Monorail Engineering Unit
Valid For Construction

GENERAL NOTES:

1. THE DIMENSIONS SHOWN ARE NOMINAL (IN MILLIMETERS), U.N.O.
2. WELD SIZESHALL BE AISC MINIMUM OF 6 mm UNLESS NOTED OTHERWISE.
3. ALL FIELD WELDS SHALL BE INSPECTED PER QUALITY ASSURANCE AND SPECIAL INSPECTIONS.

REFERENCE DRAWINGS

1	93M-BOA-NAT-LOT-04833
2	93M-BOA-NAT-LOT-09170
3	93M-BOA-NAT-LOT-01976
4	93M-BOA-NAT-LOT-20021
5	
6	
7	
8	
9	

6TH OF OCTOBER CITY RAIL TRANSIT MONORAIL

The Authority | Hill International Consultant | ORASCOM BOMBARDIER Main Contractor | INNOVA Structural Designer

KEY PLAN:

SCALE	SHOPDRAWING	DATE
AS SHOWN		09/29/2023

REV	DATE	DSG.	CHK.	APP.	AMENDMENTS	STATUS
B	08/29/2023	M.KH	M.KH	DR.M.M	ISSUED FOR INFORMATION	IFI
A	09/21/2022	M.KH	M.KH	DR.M.M	ISSUED FOR INFORMATION	IFI

DRAWING TITLE

6TH OF OCTOBER MONORAIL SERVICE WALKWAYS ZONE(1016)
Z16-HR006

Project Code	Rubric	Initiator	Lot	Ref	Number	Revision
93M	0476	ACC	60DEP	DWG	16186	B

Tekla structures

Approval is subject to approval of coordination package between multi-discipline.

REVIEWED WITH COMMENT
MONORAILS PROJECT

Length & Area & Weight per piece						
Z16-HR005	CHS48.3*4.0	S235JR	1	3811.1	0.57	16.7
Mark	Profile	Grade	QTY	Length	Area	Weight

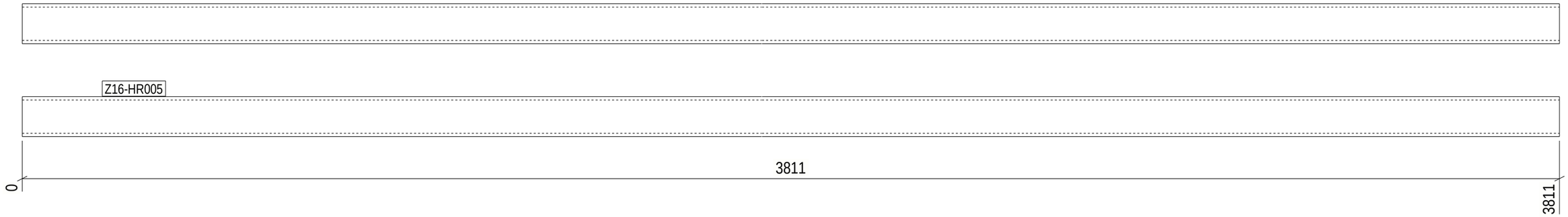

1 REQ'D AS DRAWN MK'D Z16-HR005

6 October Monorail
Engineering Unit
Valid For Construction

GENERAL NOTES:

1. THE DIMENSIONS SHOWN ARE NOMINAL (IN MILLIMETERS), U.N.O.
2. WELD SIZESHALL BE AISC MINIMUM OF 6 mm UNLESS NOTED OTHERWISE.
3. ALL FIELD WELDS SHALL BE INSPECTED PER QUALITY ASSURANCE AND SPECIAL INSPECTIONS.

REFERENCE DRAWINGS

1	93M-BOA-NAT-LOT-04833
2	93M-BOA-NAT-LOT-09170
3	93M-BOA-NAT-LOT-01976
4	93M-BOA-NAT-LOT-20021
5	
6	
7	
8	
9	

6TH OF OCTOBER CITY RAIL TRANSIT MONORAIL

The Authority | Consultant: Hill International | Main Contractor: ORASCOM CONSTRUCTION, BOMBARDIER | Structural Designer: INNOVA TRANSPORTATION

KEY PLAN:

SCALE: AS SHOWN | SHOPDRAWING | DATE: 09/29/2023

REV	DATE	DSG.	CHK.	APP.	AMENDMENTS	STATUS
B	08/29/2023	M.KH	M.KH	DR.M.M	ISSUED FOR INFORMATION	IFI
A	09/21/2022	M.KH	M.KH	DR.M.M	ISSUED FOR INFORMATION	IFI

DRAWING TITLE

6TH OF OCTOBER MONORAIL
SERVICE WALKWAYS
ZONE(1016)
Z16-HR005

Project Code	Rubric	Initiator	Lot	Ref	Number	Revision
93M	0476	ACC60DEP	DWG	16187		B

Tekla structures

Approval is subject to approval of coordination package between multi-discipline.

REVIEWED WITH COMMENT
MONORAILS PROJECT

Length & Area & Weight per piece						
Z16-HR004	CHS48.3*4.0	S235JR	1	1927.2	0.29	8.4
Mark	Profile	Grade	QTY	Length	Area	Weight

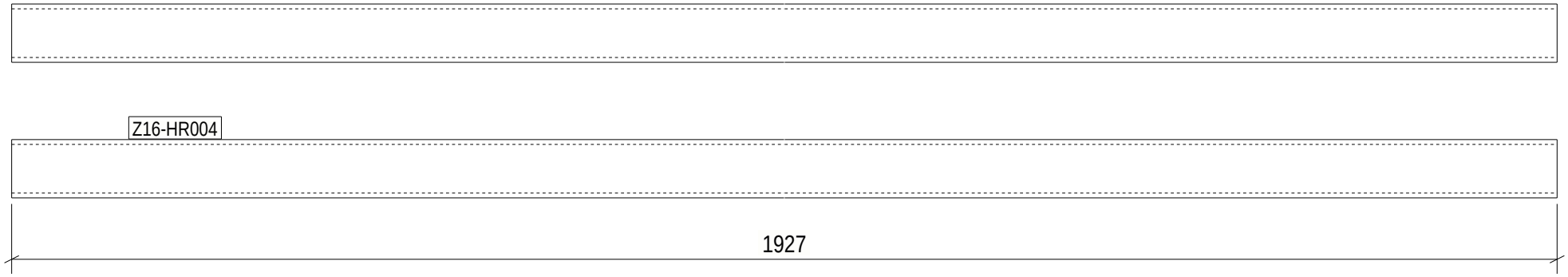

1 REQ'D AS DRAWN MK'D Z16-HR004

6 October Monorail
Engineering Unit
Valid For Construction

GENERAL NOTES:

1. THE DIMENSIONS SHOWN ARE NOMINAL (IN MILLIMETERS), U.N.O.
2. WELD SIZESHALL BE AISC MINIMUM OF 6 mm UNLESS NOTED OTHERWISE.
3. ALL FIELD WELDS SHALL BE INSPECTED PER QUALITY ASSURANCE AND SPECIAL INSPECTIONS.

REFERENCE DRAWINGS

1	93M-BOA-NAT-LOT-04833
2	93M-BOA-NAT-LOT-09170
3	93M-BOA-NAT-LOT-01976
4	93M-BOA-NAT-LOT-20021
5	
6	
7	
8	
9	

6TH OF OCTOBER CITY RAIL TRANSIT MONORAIL

The Authority | Hill International Consultant | Main Contractor | Structural Designer

KEY PLAN:

SCALE: AS SHOWN | SHOP DRAWING | DATE: 08/29/2023

DRAWING TITLE: 6TH OF OCTOBER MONORAIL SERVICE WALKWAYS ZONE(1016) Z16-HR004

REV	DATE	DSG	CHK	APP	AMENDMENTS	STATUS
B	08/29/2023	MAH	MAH	DRAW	ISSUED FOR INFORMATION	IFI
A	08/11/2022	MAH	MAH	DRAW	ISSUED FOR INFORMATION	IFI

Project Code	Rubric	Initiator	Lot	Ref	Number	Revision
93M	0476	ACC	60DEP	DWG	1618	B

Tekla structures

Approval is subject to approval of coordination package between multi-discipline.

REVIEWED WITH COMMENT
MONORAILS PROJECT

Length & Area & Weight per piece						
Z16-HR003	CHS48.3*4.0	S235JR	1	1926.2	0.29	8.4
Mark	Profile	Grade	QTY	Length	Area	Weight

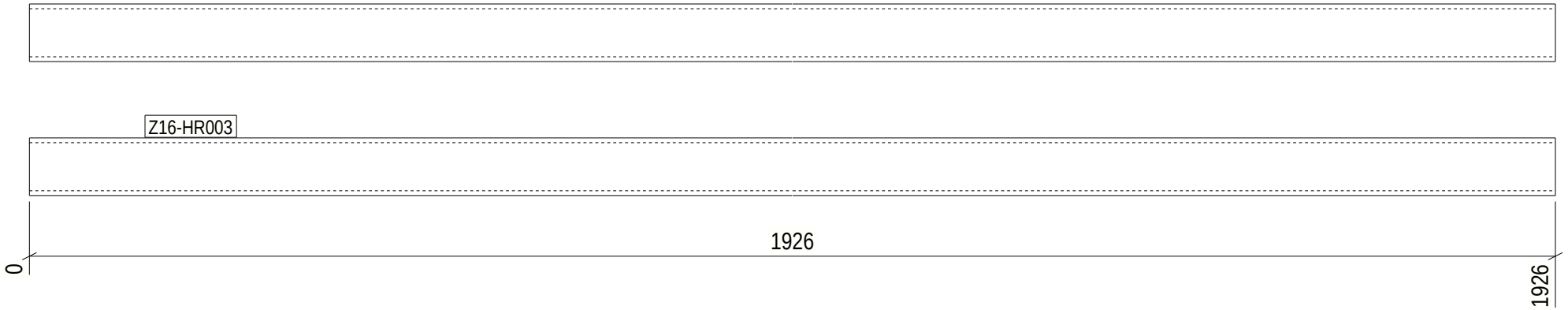

1 REQ'D AS DRAWN MK'D Z16-HR003

6 October Monorail
Engineering Unit
Valid For Construction

GENERAL NOTES:

1. THE DIMENSIONS SHOWN ARE NOMINAL (IN MILLIMETERS), U.N.O.
2. WELD SIZESHALL BE AISC MINIMUM OF 6 mm UNLESS NOTED OTHERWISE.
3. ALL FIELD WELDS SHALL BE INSPECTED PER QUALITY ASSURANCE AND SPECIAL INSPECTIONS.

REFERENCE DRAWINGS

1	93M-BOA-NAT-LOT-04833
2	93M-BOA-NAT-LOT-09170
3	93M-BOA-NAT-LOT-01976
4	93M-BOA-NAT-LOT-20021
5	
6	
7	
8	
9	

6TH OF OCTOBER CITY RAIL TRANSIT MONORAIL

The Authority | Hill International Consultant | Main Contractor | Structural Designer

KEY PLAN:

SCALE: AS SHOWN | SHOP DRAWING | DATE: 08/29/2023

DRAWING TITLE: 6TH OF OCTOBER MONORAIL SERVICE WALKWAYS ZONE(1016) Z16-HR003

REV	DATE	DSG	CHK	APP	AMENDMENTS	STATUS
B	08/29/2023	MAH	MAH	DRAW	ISSUED FOR INFORMATION	IFI
A	08/11/2022	MAH	MAH	DRAW	ISSUED FOR INFORMATION	IFI

Project Code	Rubric	Initiator	Lot	Ref	Number	Revision
9 3 M	0 4 7 6	A C C	6 0 D E P	D W G	1 6 1 8 9	B

Tekla structures

Approval is subject to approval of coordination package between multi-discipline.

REVIEWED WITH COMMENT
MONORAILS PROJECT

Length & Area & Weight per piece						
Z16-HR002	CHS48.3*4.0	S235JR	1	1926.1	0.29	8.4
Mark	Profile	Grade	QTY	Length	Area	Weight

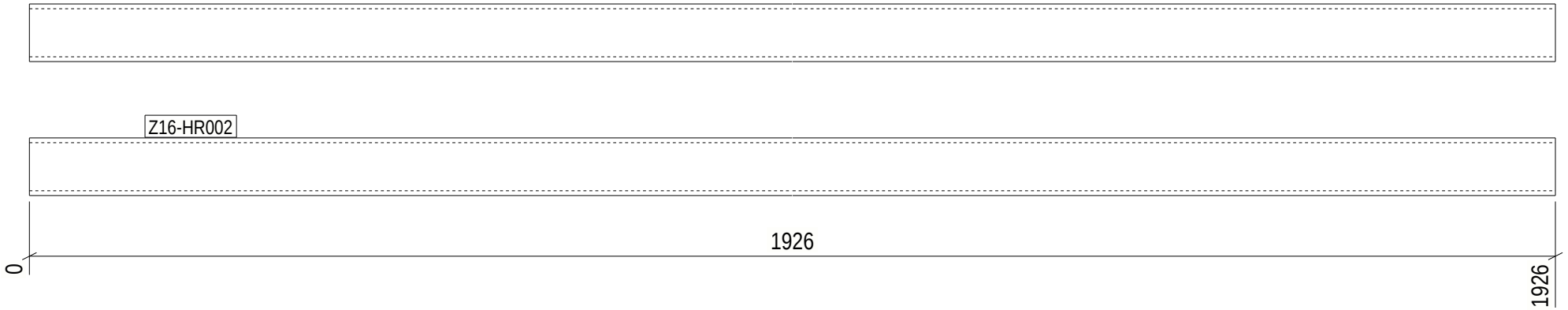

1 REQ'D AS DRAWN MK'D Z16-HR002

6 October Monorail
Engineering Unit
Valid For Construction

GENERAL NOTES:

1. THE DIMENSIONS SHOWN ARE NOMINAL (IN MILLIMETERS), U.N.O.
2. WELD SIZESHALL BE AISC MINIMUM OF 6 mm UNLESS NOTED OTHERWISE.
3. ALL FIELD WELDS SHALL BE INSPECTED PER QUALITY ASSURANCE AND SPECIAL INSPECTIONS.

REFERENCE DRAWINGS

1	93M-BOA-NAT-LOT-04833
2	93M-BOA-NAT-LOT-09170
3	93M-BOA-NAT-LOT-01976
4	93M-BOA-NAT-LOT-20021
5	
6	
7	
8	
9	

6TH OF OCTOBER CITY RAIL TRANSIT MONORAIL

The Authority — Hill International Consultant — Main Contractor — Structural Designer

KEY PLAN:

SCALE: AS SHOWN | SHOP DRAWING | DATE: 08/29/2023

DRAWING TITLE: 6TH OF OCTOBER MONORAIL SERVICE WALKWAYS ZONE(1016) Z16-HR002

REV	DATE	DSG	CHK	APP	AMENDMENTS	STATUS
B	08/29/2023	MAH	MAH	DRAW	ISSUED FOR INFORMATION	IFI
A	08/11/2022	MAH	MAH	DRAW	ISSUED FOR INFORMATION	IFI

Project Code	Rubric	Initiator	Lot	Ref	Number	Revision
9 3 M	0 4 7 6	A C C	6 0 D E P	D W G	1 6 1 9 0	B

Tekla structures

Approval is subject to approval of coordination package between multi-discipline.

REVIEWED WITH COMMENT
MONORAILS PROJECT

Length & Area & Weight per piece						
Z16-HR001	CHS48.3*4.0	S235JR	1	3811.1	0.57	16.7
Mark	Profile	Grade	QTY	Length	Area	Weight

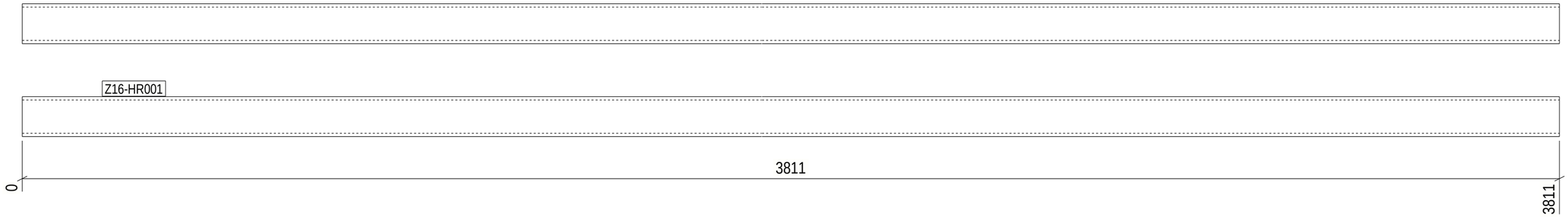

1 REQ'D AS DRAWN MK'D Z16-HR001

6 October Monorail
Engineering Unit
Valid For Construction

GENERAL NOTES:

1. THE DIMENSIONS SHOWN ARE NOMINAL (IN MILLIMETERS), U.N.O.
2. WELD SIZESHALL BE AISC MINIMUM OF 6 mm UNLESS NOTED OTHERWISE.
3. ALL FIELD WELDS SHALL BE INSPECTED PER QUALITY ASSURANCE AND SPECIAL INSPECTIONS.

REFERENCE DRAWINGS

1	93M-BOA-NAT-LOT-04833
2	93M-BOA-NAT-LOT-09170
3	93M-BOA-NAT-LOT-01976
4	93M-BOA-NAT-LOT-20021
5	
6	
7	
8	
9	

6TH OF OCTOBER CITY RAIL TRANSIT MONORAIL

The Authority | Hill International (Consultant) | ORASCOM CONSTRUCTION / BOMBARDIER (Main Contractor) | INNOVA TRANSPORTATION (Structural Designer)

KEY PLAN:

SCALE: AS SHOWN | SHOPDRAWING | DATE: 09/29/2023

REV	DATE	DSG.	CHK.	APP.	AMENDMENTS	STATUS
B	08/29/2023	M.KH	M.KH	DR.M.M	ISSUED FOR INFORMATION	IFI
A	09/21/2022	M.KH	M.KH	DR.M.M	ISSUED FOR INFORMATION	IFI

DRAWING TITLE

6TH OF OCTOBER MONORAIL
SERVICE WALKWAYS
ZONE(1016)
Z16-HR001

Project Code	Rubric	Initiator	Lot	Ref	Number	Revision
93M	047	ACC60DEP	DWG	161911	B

Tekla structures

Approval is subject to approval of coordination package between multi-discipline.

REVIEWED WITH COMMENT
MONORAILS PROJECT

Length & Area & Weight per piece						
Z16-FR027	UPN160	S235JR	2	2368.0	1.30	44.6
Mark	Profile	Grade	QTY	Length	Area	Weight

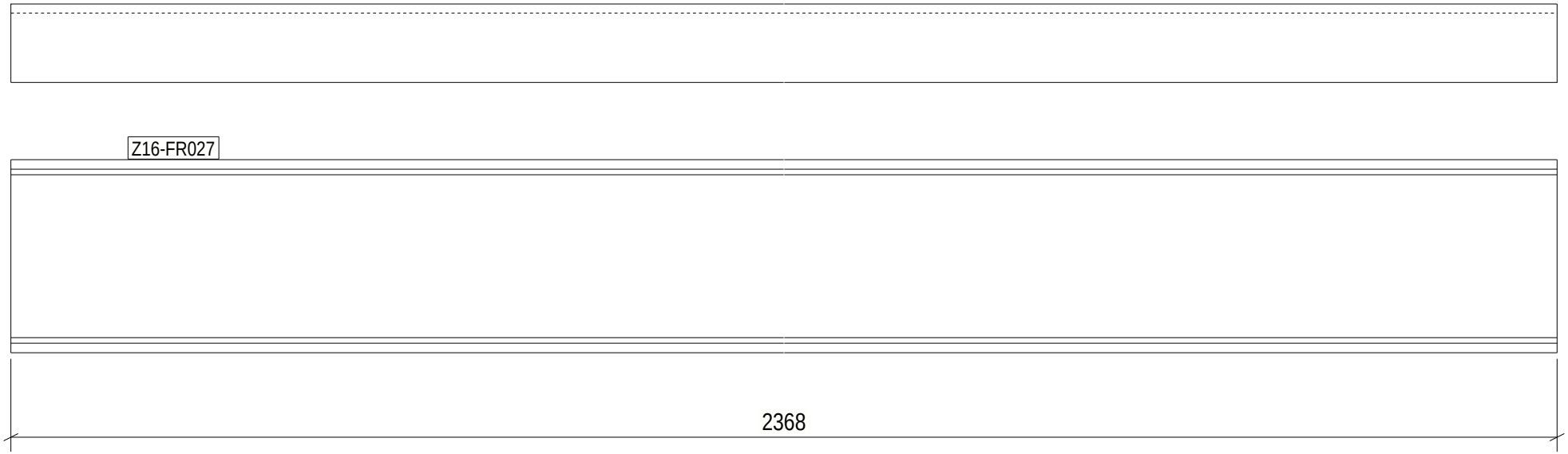

2 REQ'D AS DRAWN MK'D Z16-FR027

6 October Monorail
Engineering Unit
Valid For Construction

Tekla structures

GENERAL NOTES:

1. THE DIMENSIONS SHOWN ARE NOMINAL (IN MILLIMETERS), U.N.O.
2. WELD SIZESHALL BE AISC MINIMUM OF 6 mm UNLESS NOTED OTHERWISE.
3. ALL FIELD WELDS SHALL BE INSPECTED PER QUALITY ASSURANCE AND SPECIAL INSPECTIONS.

REFERENCE DRAWINGS

1	93M-BOA-NAT-LOT-04833
2	93M-BOA-NAT-LOT-09170
3	93M-BOA-NAT-LOT-01976
4	93M-BOA-NAT-LOT-20021
5	
6	
7	
8	
9	

6TH OF OCTOBER CITY RAIL TRANSIT MONORAIL

The Authority | Hill International Consultant | Main Contractor | Structural Designer

KEY PLAN:

SCALE: AS SHOWN | SHOP DRAWING | DATE: 08/29/2023

DRAWING TITLE: 6TH OF OCTOBER MONORAIL SERVICE WALKWAYS ZONE(1016) Z16-FR027

REV	DATE	DSG	CHK	APP	AMENDMENTS	STATUS
B	08/29/2023	MAH	MAH	DRAW	ISSUED FOR INFORMATION	IFI
A	08/11/2022	MAH	MAH	DRAW	ISSUED FOR INFORMATION	IFI

Project Code	Rubric	Initiator	Lot	Ref	Number	Revision
9 3 M	0 4 7 6	A C C	6 0 D E P	D W G	1 6 1 9 2	B

Approval is subject to approval of coordination package between multi-discipline.

REVIEWED WITH COMMENT
MONORAILS PROJECT

Length & Area & Weight per piece						
Z16-FR026	UPN160	S235JR	29	2368.0	1.30	44.6
Mark	Profile	Grade	QTY	Length	Area	Weight

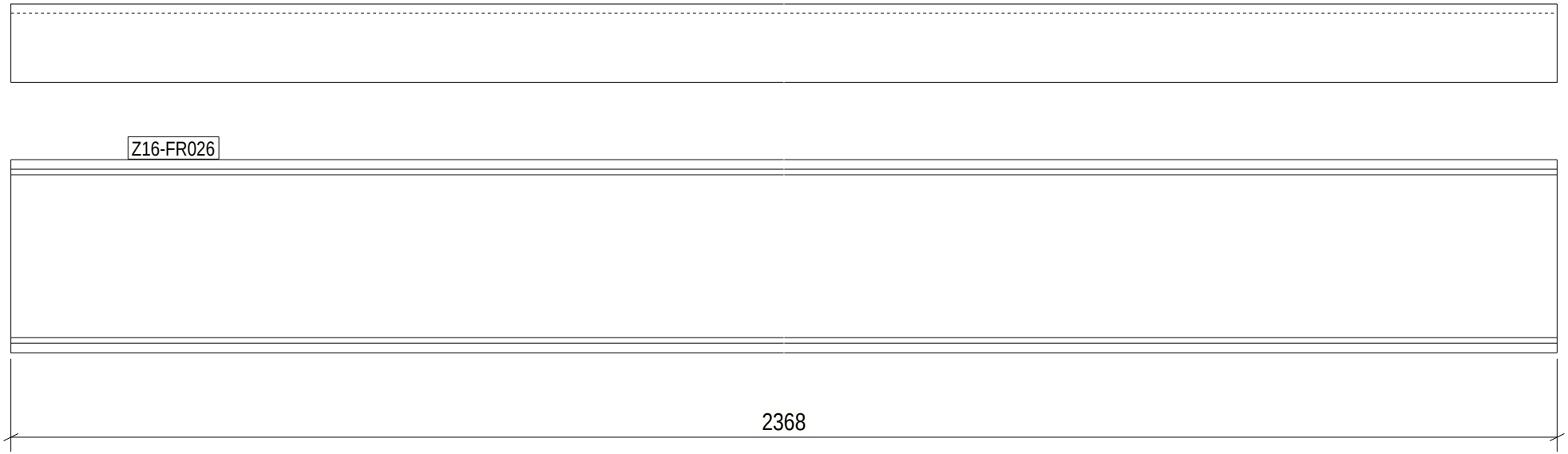

29 REQ'D AS DRAWN MK'D Z16-FR026

6 October Monorail
Engineering Unit
Valid For Construction

Tekla structures

GENERAL NOTES:

1. THE DIMENSIONS SHOWN ARE NOMINAL (IN MILLIMETERS), U.N.O.
2. WELD SIZESHALL BE AISC MINIMUM OF 6 mm UNLESS NOTED OTHERWISE.
3. ALL FIELD WELDS SHALL BE INSPECTED PER QUALITY ASSURANCE AND SPECIAL INSPECTIONS.

REFERENCE DRAWINGS

1	93M-BOA-NAT-LOT-04833
2	93M-BOA-NAT-LOT-09170
3	93M-BOA-NAT-LOT-01976
4	93M-BOA-NAT-LOT-20021
5	
6	
7	
8	
9	

6TH OF OCTOBER CITY RAIL TRANSIT MONORAIL

The Authority | Hill International Consultant | Main Contractor | Structural Designer

KEY PLAN:

SCALE: AS SHOWN | SHOP DRAWING | DATE: 08/29/2023

DRAWING TITLE: 6TH OF OCTOBER MONORAIL SERVICE WALKWAYS ZONE(1016) Z16-FR026

REV	DATE	DSG	CHK	APP	AMENDMENTS	STATUS
B	08/29/2023	MAH	MAH	DRAW	ISSUED FOR INFORMATION	IFI
A	08/11/2022	MAH	MAH	DRAW	ISSUED FOR INFORMATION	IFI

Project Code	Rubric	Initiator	Lot	Ref	Number	Revision
93M	0476	ACC	60DEP	DWG	16193	B

Approval is subject to approval of coordination package between multi-discipline.

REVIEWED WITH COMMENT
MONORAILS PROJECT

Length & Area & Weight per piece						
Z16-FR025	UPN160	S235JR	1	2368.0	1.30	44.6
Mark	Profile	Grade	QTY	Length	Area	Weight

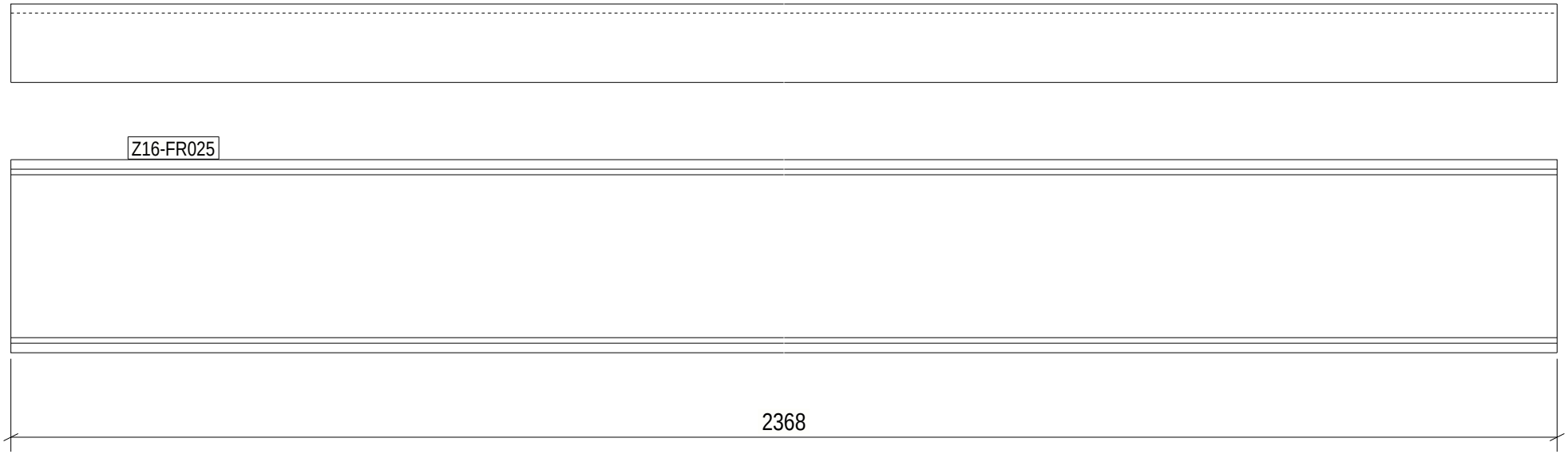

1 REQ'D AS DRAWN MK'D Z16-FR025

6 October Monorail
Engineering Unit
Valid For Construction

GENERAL NOTES:

1. THE DIMENSIONS SHOWN ARE NOMINAL (IN MILLIMETERS), U.N.O.
2. WELD SIZESHALL BE AISC MINIMUM OF 6 mm UNLESS NOTED OTHERWISE.
3. ALL FIELD WELDS SHALL BE INSPECTED PER QUALITY ASSURANCE AND SPECIAL INSPECTIONS.

REFERENCE DRAWINGS

1	93M-BOA-NAT-LOT-04833
2	93M-BOA-NAT-LOT-09170
3	93M-BOA-NAT-LOT-01976
4	93M-BOA-NAT-LOT-20021
5	
6	
7	
8	
9	

6TH OF OCTOBER CITY RAIL TRANSIT MONORAIL

The Authority — Hill International Consultant — Main Contractor — Structural Designer

KEY PLAN:

SCALE: AS SHOWN | SHOP DRAWING | DATE: 08/29/2023

DRAWING TITLE: 6TH OF OCTOBER MONORAIL SERVICE WALKWAYS ZONE(1016) Z16-FR025

REV	DATE	DSG	CHK	APP	AMENDMENTS	STATUS
B	08/29/2023	MAH	MAH	DRAW	ISSUED FOR INFORMATION	IFI
A	08/11/2022	MAH	MAH	DRAW	ISSUED FOR INFORMATION	IFI

Project Code	Rubric	Initiator	Lot	Ref	Number	Revision
93M	0476	ACC60	DEP	DWG	16194	B

Tekla structures

Approval is subject to approval of coordination package between multi-discipline.

REVIEWED WITH COMMENT
MONORAILS PROJECT

Length & Area & Weight per piece						
Z16-FR024	UPN160	S235JR	2	2368.0	1.30	44.6
Mark	Profile	Grade	QTY	Length	Area	Weight

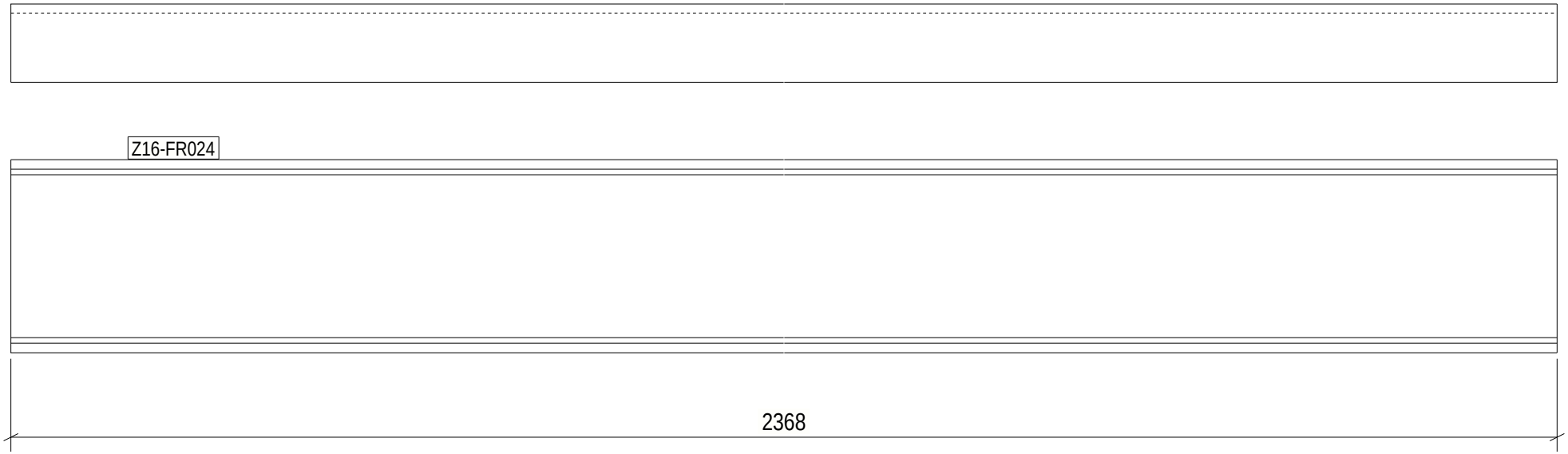

2 REQ'D AS DRAWN MK'D Z16-FR024

6 October Monorail
Engineering Unit
Valid For Construction

Tekla structures

GENERAL NOTES:

1. THE DIMENSIONS SHOWN ARE NOMINAL (IN MILLIMETERS), U.N.O.
2. WELD SIZESHALL BE AISC MINIMUM OF 6 mm UNLESS NOTED OTHERWISE.
3. ALL FIELD WELDS SHALL BE INSPECTED PER QUALITY ASSURANCE AND SPECIAL INSPECTIONS.

REFERENCE DRAWINGS

1	93M-BOA-NAT-LOT-04833
2	93M-BOA-NAT-LOT-09170
3	93M-BOA-NAT-LOT-01976
4	93M-BOA-NAT-LOT-20021
5	
6	
7	
8	
9	

6TH OF OCTOBER CITY RAIL TRANSIT MONORAIL

The Authority | Hill International Consultant | Main Contractor | Structural Designer

KEY PLAN:

SCALE: AS SHOWN | SHOP DRAWING | DATE: 08/29/2023

DRAWING TITLE: 6TH OF OCTOBER MONORAIL SERVICE WALKWAYS ZONE(1016) Z16-FR024

REV	DATE	DSG	CHK	APP	AMENDMENTS	STATUS
B	08/29/2023	MAH	MAH	DRAW	ISSUED FOR INFORMATION	IFI
A	08/11/2022	MAH	MAH	DRAW	ISSUED FOR INFORMATION	IFI

Project Code	Rubric	Initiator	Lot	Ref	Number	Revision
9 3 M	0 4 7 6	A C C	6 0 D E P	D W G	1 6 1 9 5	B

Approval is subject to approval of coordination package between multi-discipline.

REVIEWED WITH COMMENT
MONORAILS PROJECT

Length & Area & Weight per piece						
Z16-FR022	UPN160	S235JR	2	2368.0	1.30	44.6
Mark	Profile	Grade	QTY	Length	Area	Weight

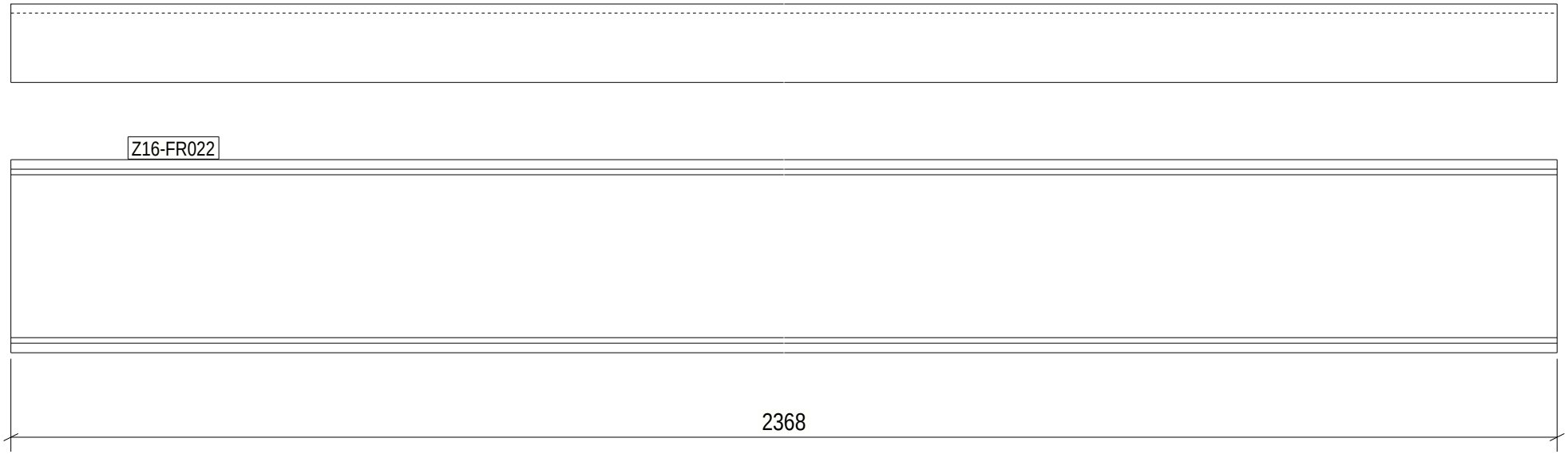

2 REQ'D AS DRAWN MK'D Z16-FR022

6 October Monorail
Engineering Unit
Valid For Construction

Tekla structures

GENERAL NOTES:

1. THE DIMENSIONS SHOWN ARE NOMINAL (IN MILLIMETERS), U.N.O.
2. WELD SIZESHALL BE AISC MINIMUM OF 6 mm UNLESS NOTED OTHERWISE.
3. ALL FIELD WELDS SHALL BE INSPECTED PER QUALITY ASSURANCE AND SPECIAL INSPECTIONS.

REFERENCE DRAWINGS

1	93M-BOA-NAT-LOT-04833
2	93M-BOA-NAT-LOT-09170
3	93M-BOA-NAT-LOT-01976
4	93M-BOA-NAT-LOT-20021
5	
6	
7	
8	
9	

6TH OF OCTOBER CITY RAIL TRANSIT MONORAIL

The Authority | Hill International Consultant | Main Contractor | Structural Designer

KEY PLAN:

SCALE: AS SHOWN | SHOP DRAWING | DATE: 08/29/2023

DRAWING TITLE: 6TH OF OCTOBER MONORAIL SERVICE WALKWAYS ZONE(1016) Z16-FR022

REV	DATE	DSG	CHK	APP	AMENDMENTS	STATUS
B	08/29/2023	MAH	MAH	DRAW	ISSUED FOR INFORMATION	IFI
A	08/21/2022	MAH	MAH	DRAW	ISSUED FOR INFORMATION	IFI

Project Code	Rubric	Initiator	Lot	Ref	Number	Revision
93M	0476	ACC60	DEP	DWG	1619	B

Approval is subject to approval of coordination package between multi-discipline.

REVIEWED WITH COMMENT MONORAILS PROJECT

Length & Area & Weight per piece

Mark	Profile	Grade	QTY	Length	Area	Weight
Z16-FR021	UPN160	S235JR	1	2368.0	1.30	44.6

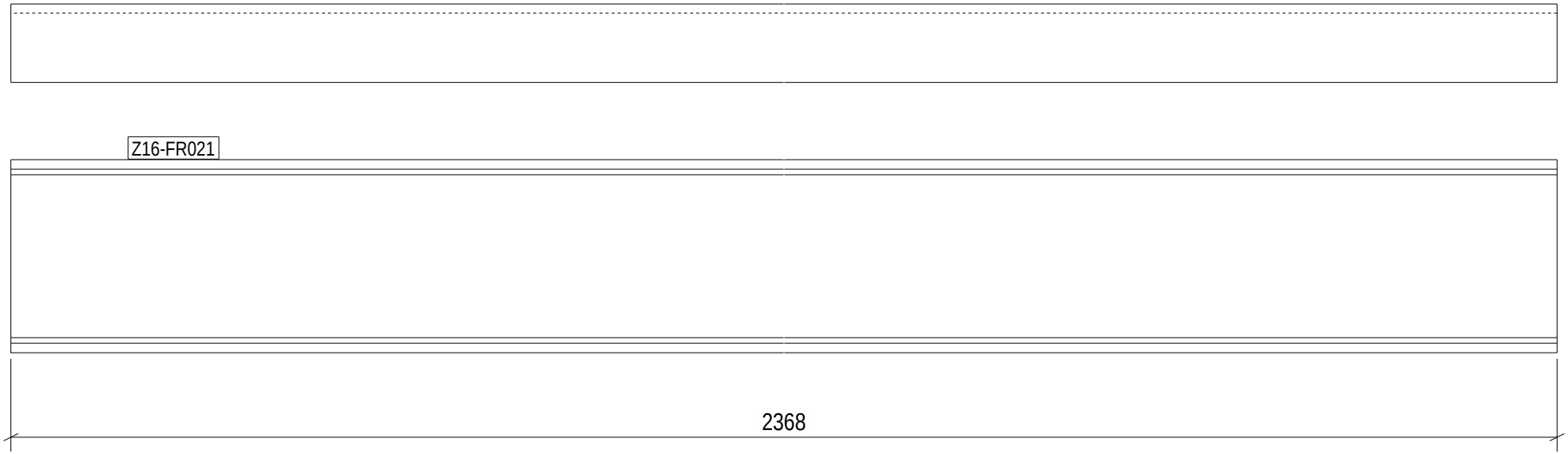

1 REQ'D AS DRAWN MK'D Z16-FR021

6 October Monorail Engineering Unit Valid For Construction

Tekla structures

GENERAL NOTES:

1. THE DIMENSIONS SHOWN ARE NOMINAL (IN MILLIMETERS), U.N.O.
2. WELD SIZESHALL BE AISC MINIMUM OF 6 mm UNLESS NOTED OTHERWISE.
3. ALL FIELD WELDS SHALL BE INSPECTED PER QUALITY ASSURANCE AND SPECIAL INSPECTIONS.

REFERENCE DRAWINGS

1	93M-BOA-NAT-LOT-04833
2	93M-BOA-NAT-LOT-09170
3	93M-BOA-NAT-LOT-01976
4	93M-BOA-NAT-LOT-20021
5	
6	
7	
8	
9	

6TH OF OCTOBER CITY RAIL TRANSIT MONORAIL

The Authority | Hill International Consultant | Main Contractor | Structural Designer

KEY PLAN:

SCALE: AS SHOWN | SHOP DRAWING | DATE: 08/29/2023

DRAWING TITLE: 6TH OF OCTOBER MONORAIL SERVICE WALKWAYS ZONE(1016) Z16-FR021

REV	DATE	DSG	CHK	APP	AMENDMENTS	STATUS
B	08/29/2023	MAH	MAH	DRAW	ISSUED FOR INFORMATION	IFI
A	08/11/2022	MAH	MAH	DRAW	ISSUED FOR INFORMATION	IFI

Project Code	Rubric	Initiator	Lot	Ref	Number	Revision
9 3 M	0 4 7 6	A C C	6 0 D E P	D W G	1 6 1 9 7	B

Approval is subject to approval of coordination package between multi-discipline.

REVIEWED WITH COMMENT MONORAILS PROJECT

Length & Area & Weight per piece						
Z16-FR020	UPN160	S235JR	1	2368.0	1.30	44.6
Mark	Profile	Grade	QTY	Length	Area	Weight

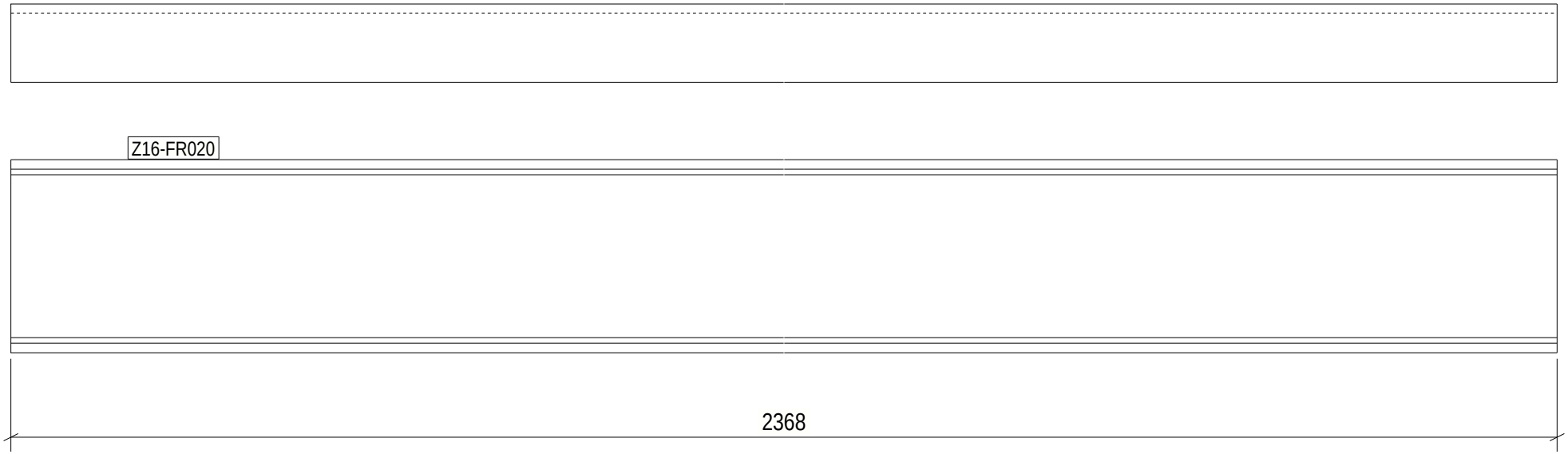

1 REQ'D AS DRAWN MK'D Z16-FR020

6 October Monorail Engineering Unit Valid For Construction

GENERAL NOTES:

1. THE DIMENSIONS SHOWN ARE NOMINAL (IN MILLIMETERS), U.N.O.
2. WELD SIZESHALL BE AISC MINIMUM OF 6 mm UNLESS NOTED OTHERWISE.
3. ALL FIELD WELDS SHALL BE INSPECTED PER QUALITY ASSURANCE AND SPECIAL INSPECTIONS.

REFERENCE DRAWINGS

1	93M-BOA-NAT-LOT-04833
2	93M-BOA-NAT-LOT-09170
3	93M-BOA-NAT-LOT-01976
4	93M-BOA-NAT-LOT-20021
5	
6	
7	
8	
9	

6TH OF OCTOBER CITY RAIL TRANSIT MONORAIL

The Authority | Hill International Consultant | Main Contractor | Structural Designer

KEY PLAN:

SCALE: AS SHOWN | SHOP DRAWING | DATE: 08/29/2023

DRAWING TITLE: 6TH OF OCTOBER MONORAIL SERVICE WALKWAYS ZONE(1016) Z16-FR020

REV	DATE	DSG	CHK	APP	AMENDMENTS	STATUS
B	08/29/2023	MAH	MAH	DRAW	ISSUED FOR INFORMATION	IFI
A	08/11/2022	MAH	MAH	DRAW	ISSUED FOR INFORMATION	IFI

Project Code	Rubric	Initiator	Lot	Ref	Number	Revision
93M	0476	ACC60	DEP	DWG	16198	B

Tekla structures

Approval is subject to approval of coordination package between multi-discipline.

REVIEWED WITH COMMENT
MONORAILS PROJECT

Length & Area & Weight per piece						
Z16-FR019	UPN160	S235JR	1	2368.0	1.30	44.6
Mark	Profile	Grade	QTY	Length	Area	Weight

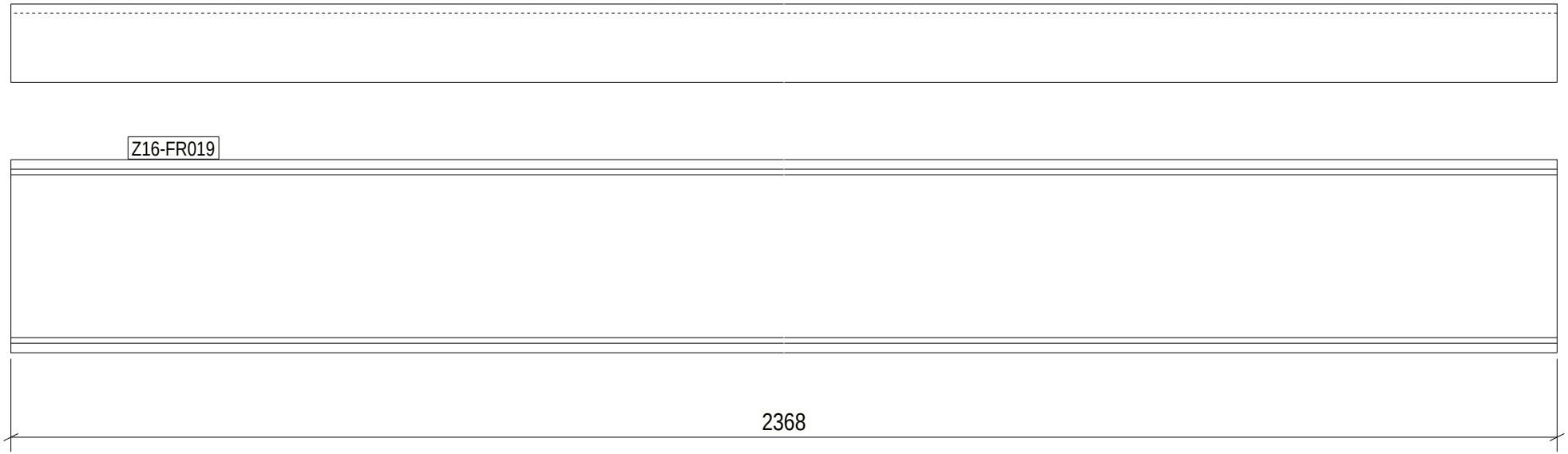

1 REQ'D AS DRAWN MK'D Z16-FR019

6 October Monorail
Engineering Unit
Valid For Construction

Tekla structures

GENERAL NOTES:

1. THE DIMENSIONS SHOWN ARE NOMINAL (IN MILLIMETERS), U.N.O.
2. WELD SIZESHALL BE AISC MINIMUM OF 6 mm UNLESS NOTED OTHERWISE.
3. ALL FIELD WELDS SHALL BE INSPECTED PER QUALITY ASSURANCE AND SPECIAL INSPECTIONS.

REFERENCE DRAWINGS

1	93M-BOA-NAT-LOT-04833
2	93M-BOA-NAT-LOT-09170
3	93M-BOA-NAT-LOT-01976
4	93M-BOA-NAT-LOT-20021
5	
6	
7	
8	
9	

6TH OF OCTOBER CITY RAIL TRANSIT MONORAIL

The Authority | Hill International Consultant | Main Contractor | Structural Designer

KEY PLAN:

SCALE: AS SHOWN | SHOP DRAWING | DATE: 08/29/2023

DRAWING TITLE: 6TH OF OCTOBER MONORAIL SERVICE WALKWAYS ZONE(1016) Z16-FR019

REV	DATE	DSG	CHK	APP	AMENDMENTS	STATUS
B	08/29/2023	MAH	MAH	DRAW	ISSUED FOR INFORMATION	IFI
A	08/11/2022	MAH	MAH	DRAW	ISSUED FOR INFORMATION	IFI

Project Code	Rubric	Initiator	Lot	Ref	Number	Revision
9 3	M 0 4 7 6	A C C	6 0 D E P	D W G	1 6 1 9 9	B

Approval is subject to approval of coordination package between multi-discipline.

REVIEWED WITH COMMENT
MONORAILS PROJECT

Length & Area & Weight per piece						
Z16-FR018	UPN160	S235JR	1	2368.0	1.30	44.6
Mark	Profile	Grade	QTY	Length	Area	Weight

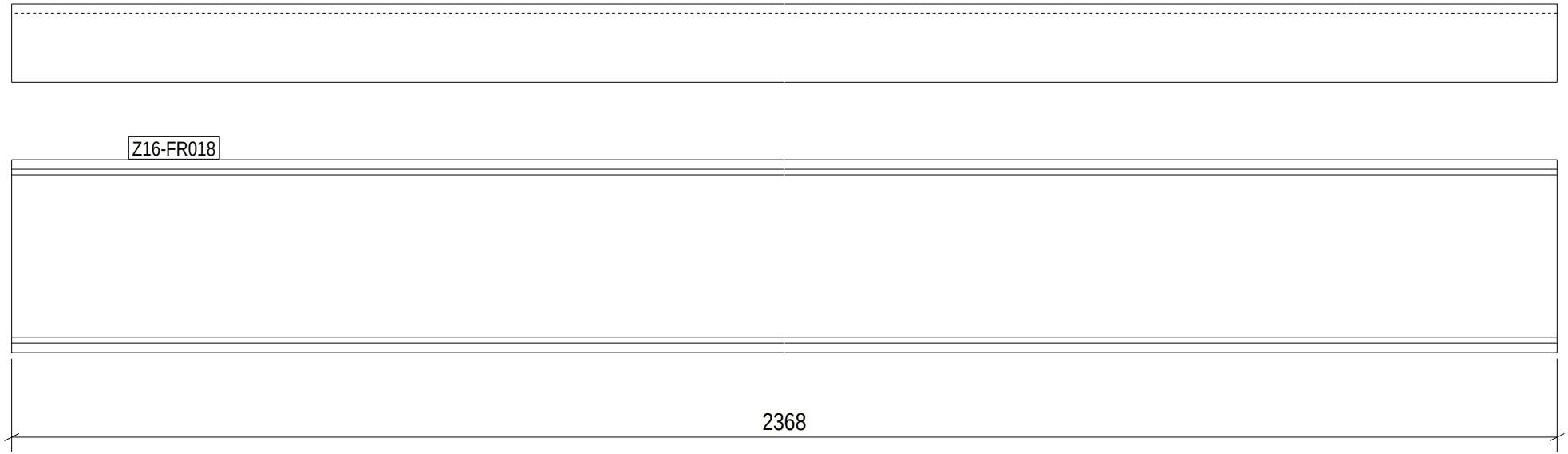

1 REQ'D AS DRAWN MK'D Z16-FR018

6 October Monorail
Engineering Unit
Valid For Construction

GENERAL NOTES:

1. THE DIMENSIONS SHOWN ARE NOMINAL (IN MILLIMETERS), U.N.O.
2. WELD SIZESHALL BE AISC MINIMUM OF 6 mm UNLESS NOTED OTHERWISE.
3. ALL FIELD WELDS SHALL BE INSPECTED PER QUALITY ASSURANCE AND SPECIAL INSPECTIONS.

REFERENCE DRAWINGS

1	93M-BOA-NAT-LOT-04833
2	93M-BOA-NAT-LOT-09170
3	93M-BOA-NAT-LOT-01976
4	93M-BOA-NAT-LOT-20021
5	
6	
7	
8	
9	

6TH OF OCTOBER CITY RAIL TRANSIT MONORAIL

The Authority — Hill International Consultant — Main Contractor — Structural Designer

KEY PLAN:

SCALE: AS SHOWN | SHOP DRAWING | DATE: 08/29/2023

DRAWING TITLE: 6TH OF OCTOBER MONORAIL SERVICE WALKWAYS ZONE(1016) Z16-FR018

REV	DATE	DSG	CHK	APP	AMENDMENTS	STATUS
B	08/29/2023	MAH	MAH	DRAW	ISSUED FOR INFORMATION	IFI
A	08/11/2022	MAH	MAH	DRAW	ISSUED FOR INFORMATION	IFI

Project Code	Rubric	Initiator	Lot	Ref	Number	Revision
93M	0476	ACC	60DEP	DWG	1620	00 B

Tekla structures

Approval is subject to approval of coordination package between multi-discipline.

REVIEWED WITH COMMENT
MONORAILS PROJECT

Length & Area & Weight per piece						
Z16-FR017	UPN160	S235JR	1	2368.0	1.30	44.6
Mark	Profile	Grade	QTY	Length	Area	Weight

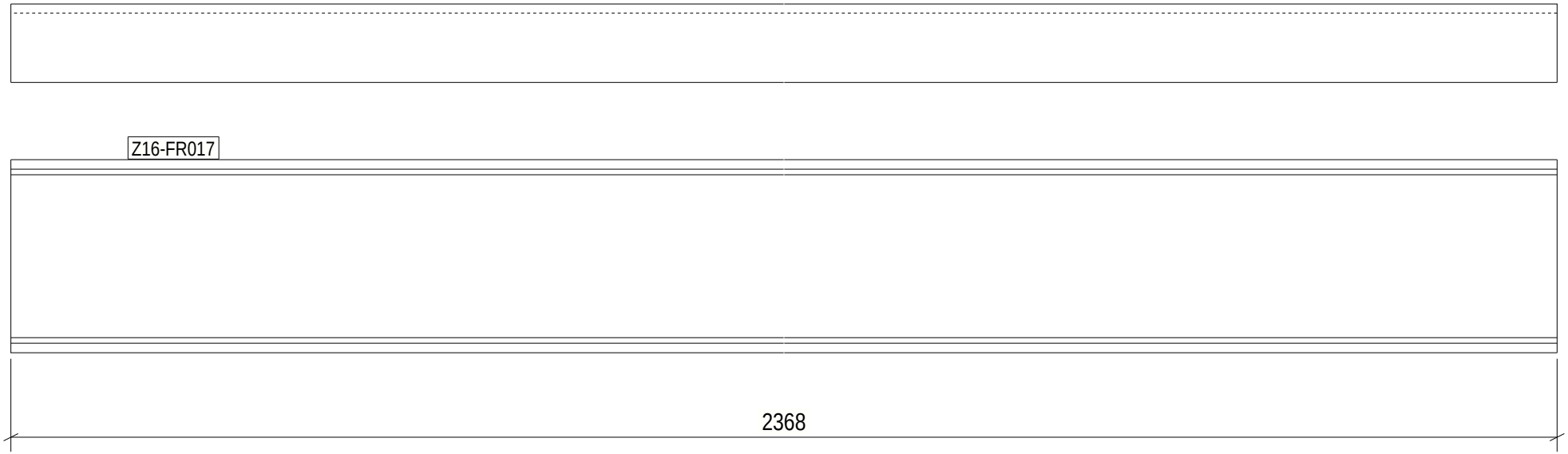

1 REQ'D AS DRAWN MK'D Z16-FR017

6 October Monorail
Engineering Unit
Valid For Construction

Tekla structures

GENERAL NOTES:

1. THE DIMENSIONS SHOWN ARE NOMINAL (IN MILLIMETERS), U.N.O.
2. WELD SIZESHALL BE AISC MINIMUM OF 6 mm UNLESS NOTED OTHERWISE.
3. ALL FIELD WELDS SHALL BE INSPECTED PER QUALITY ASSURANCE AND SPECIAL INSPECTIONS.

REFERENCE DRAWINGS

1	93M-BOA-NAT-LOT-04833
2	93M-BOA-NAT-LOT-09170
3	93M-BOA-NAT-LOT-01976
4	93M-BOA-NAT-LOT-20021
5	
6	
7	
8	
9	

6TH OF OCTOBER CITY RAIL TRANSIT MONORAIL

The Authority | Hill International Consultant | Main Contractor | Structural Designer

KEY PLAN:

SCALE: AS SHOWN | SHOP DRAWING | DATE: 08/29/2023

DRAWING TITLE: 6TH OF OCTOBER MONORAIL SERVICE WALKWAYS ZONE(1016) Z16-FR017

REV	DATE	DSG	CHK	APP	AMENDMENTS	STATUS
B	08/29/2023	MAH	MAH	DRAW	ISSUED FOR INFORMATION	IFI
A	08/11/2022	MAH	MAH	DRAW	ISSUED FOR INFORMATION	IFI

Project Code	Rubric	Initiator	Lot	Ref	Number	Revision
9 3 M	0 4 7 6	A C C	6 0 D E P	D W G	1 6 2 0 1	B

Approval is subject to approval of coordination package between multi-discipline.

REVIEWED WITH COMMENT
MONORAILS PROJECT

Length & Area & Weight per piece

Mark	Profile	Grade	QTY	Length	Area	Weight
Z16-FR016	UPN160	S235JR	1	2368.0	1.30	44.6

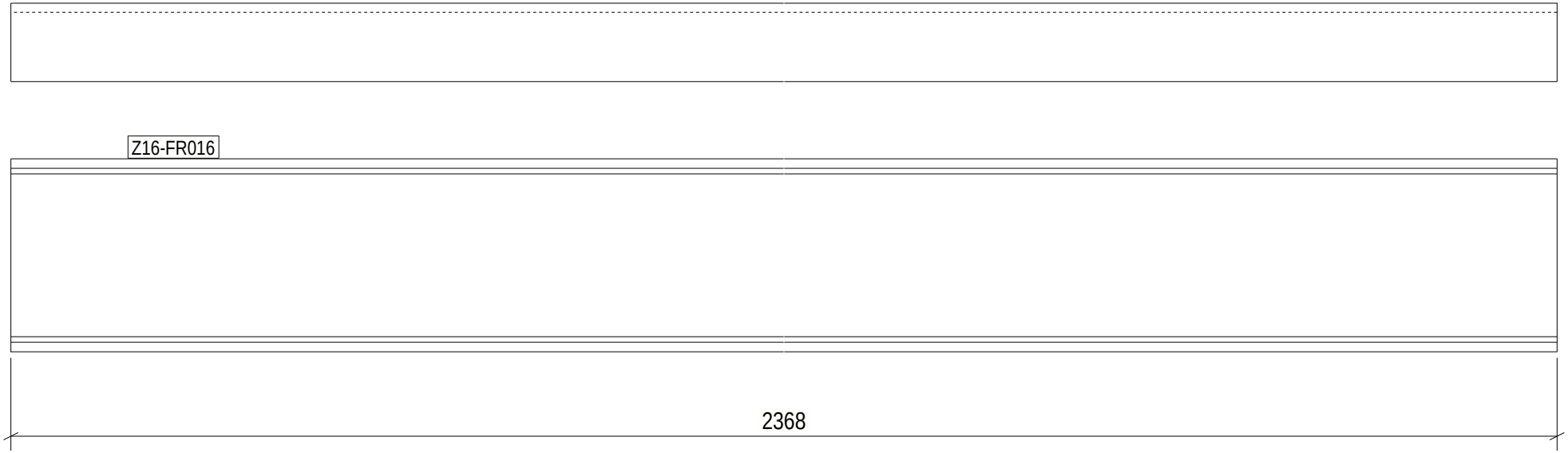

1 REQ'D AS DRAWN MK'D Z16-FR016

6 October Monorail
Engineering Unit
Valid For Construction

GENERAL NOTES:

1. THE DIMENSIONS SHOWN ARE NOMINAL (IN MILLIMETERS), U.N.O.
2. WELD SIZESHALL BE AISC MINIMUM OF 6 mm UNLESS NOTED OTHERWISE.
3. ALL FIELD WELDS SHALL BE INSPECTED PER QUALITY ASSURANCE AND SPECIAL INSPECTIONS.

REFERENCE DRAWINGS

1	93M-BOA-NAT-LOT-04833
2	93M-BOA-NAT-LOT-09170
3	93M-BOA-NAT-LOT-01976
4	93M-BOA-NAT-LOT-20021
5	
6	
7	
8	
9	

6TH OF OCTOBER CITY RAIL TRANSIT MONORAIL

The Authority | Hill International Consultant | Main Contractor | Structural Designer

KEY PLAN:

SCALE: AS SHOWN | SHOP DRAWING | DATE: 08/29/2023

DRAWING TITLE: 6TH OF OCTOBER MONORAIL SERVICE WALKWAYS ZONE(1016) Z16-FR016

REV	DATE	DSG	CHK	APP	AMENDMENTS	STATUS
B	08/29/2023	MAH	MAH	DRAW	ISSUED FOR INFORMATION	IFI
A	08/11/2022	MAH	MAH	DRAW	ISSUED FOR INFORMATION	IFI

Project Code	Rubric	Initiator	Lot	Ref	Number	Revision
93M	0476	ACC	60DEP	DWG	16202	B

Tekla structures

Approval is subject to approval of coordination package between multi-discipline.

REVIEWED WITH COMMENT
MONORAILS PROJECT

Length & Area & Weight per piece						
Z16-FR015	UPN160	S235JR	1	2368.0	1.30	44.6
Mark	Profile	Grade	QTY	Length	Area	Weight

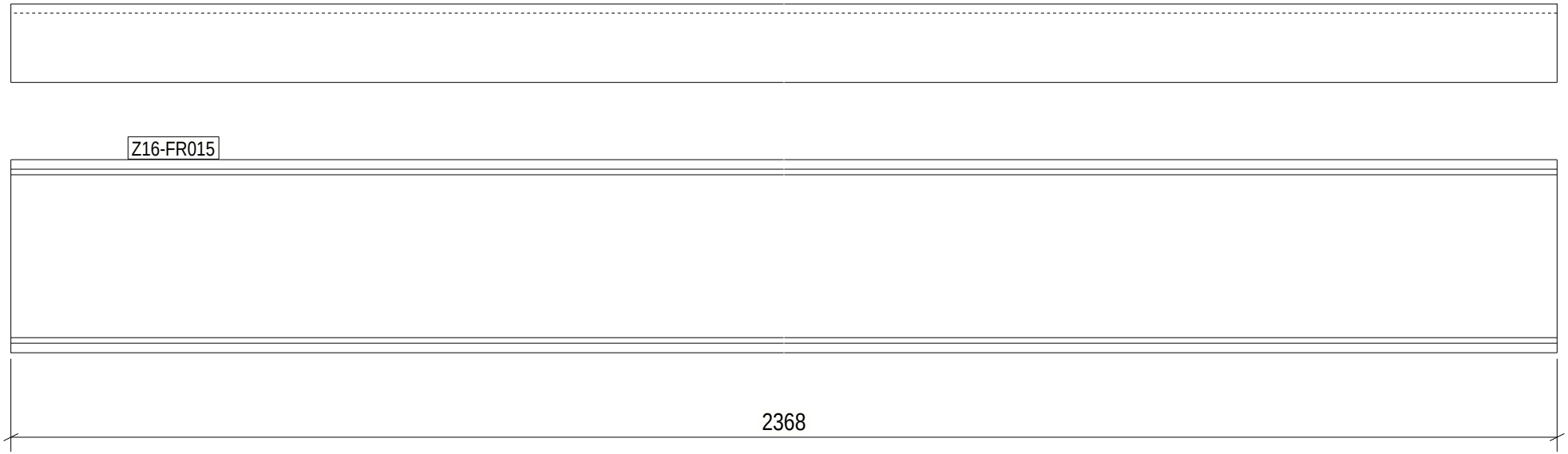

1 REQ'D AS DRAWN MK'D Z16-FR015

6 October Monorail
Engineering Unit
Valid For Construction

GENERAL NOTES:

1. THE DIMENSIONS SHOWN ARE NOMINAL (IN MILLIMETERS), U.N.O.
2. WELD SIZESHALL BE AISC MINIMUM OF 6 mm UNLESS NOTED OTHERWISE.
3. ALL FIELD WELDS SHALL BE INSPECTED PER QUALITY ASSURANCE AND SPECIAL INSPECTIONS.

REFERENCE DRAWINGS

1	93M-BOA-NAT-LOT-04833
2	93M-BOA-NAT-LOT-09170
3	93M-BOA-NAT-LOT-01976
4	93M-BOA-NAT-LOT-20021
5	
6	
7	
8	
9	

6TH OF OCTOBER CITY RAIL TRANSIT MONORAIL

The Authority | Hill International Consultant | Main Contractor | Structural Designer

KEY PLAN:

SCALE: AS SHOWN | SHOP DRAWING | DATE: 08/29/2023

DRAWING TITLE: 6TH OF OCTOBER MONORAIL SERVICE WALKWAYS ZONE(1016) Z16-FR015

REV	DATE	DSG	CHK	APP	AMENDMENTS	STATUS
B	08/29/2023	MAH	MAH	DRAW	ISSUED FOR INFORMATION	IFI
A	08/11/2022	MAH	MAH	DRAW	ISSUED FOR INFORMATION	IFI

Project Code	Rubric	Initiator	Lot	Ref	Number	Revision
93M	0476	ACC	60DEP	DWG	16203	B

Tekla structures

Approval is subject to approval of coordination package between multi-discipline.

REVIEWED WITH COMMENT
MONORAILS PROJECT

Length & Area & Weight per piece						
Z16-FR013	UPN160	S235JR	1	2368.0	1.30	44.6
Mark	Profile	Grade	QTY	Length	Area	Weight

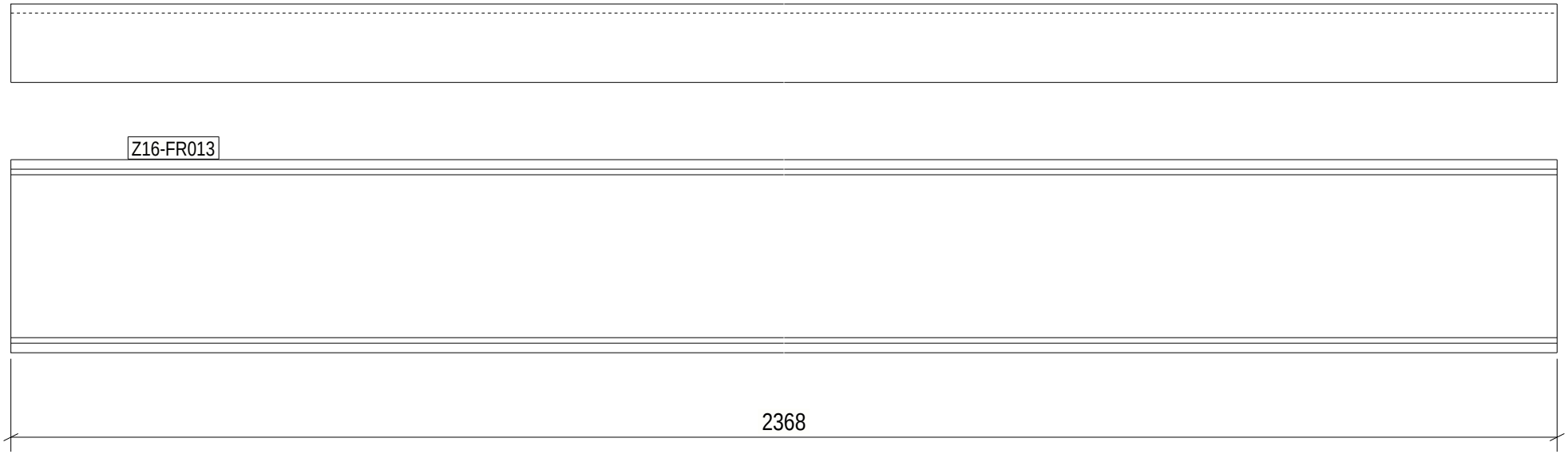

1 REQ'D AS DRAWN MK'D Z16-FR013

6 October Monorail
Engineering Unit
Valid For Construction

GENERAL NOTES:

1. THE DIMENSIONS SHOWN ARE NOMINAL (IN MILLIMETERS), U.N.O.
2. WELD SIZESHALL BE AISC MINIMUM OF 6 mm UNLESS NOTED OTHERWISE.
3. ALL FIELD WELDS SHALL BE INSPECTED PER QUALITY ASSURANCE AND SPECIAL INSPECTIONS.

REFERENCE DRAWINGS

1	93M-BOA-NAT-LOT-04833
2	93M-BOA-NAT-LOT-09170
3	93M-BOA-NAT-LOT-01976
4	93M-BOA-NAT-LOT-20021
5	
6	
7	
8	
9	

6TH OF OCTOBER CITY RAIL TRANSIT MONORAIL

The Authority | Hill International Consultant | Main Contractor | Structural Designer

KEY PLAN:

SCALE: AS SHOWN | SHOP DRAWING | DATE: 08/29/2023

DRAWING TITLE: 6TH OF OCTOBER MONORAIL SERVICE WALKWAYS ZONE(1016) Z16-FR013

REV	DATE	DSG	CHK	APP	AMENDMENTS	STATUS
B	08/29/2023	MAH	MAH	DRAW	ISSUED FOR INFORMATION	IFI
A	08/11/2022	MAH	MAH	DRAW	ISSUED FOR INFORMATION	IFI

Project Code	Rubric	Initiator	Lot	Ref	Number	Revision
9 3 M	0 4 7 6	A C C	6 0 D E P	D W G	1 6 2 0 4	B

Tekla structures

Approval is subject to approval of coordination package between multi-discipline.

REVIEWED WITH COMMENT
MONORAILS PROJECT

Length & Area & Weight per piece						
Z16-FR012	UPN160	S235JR	1	2368.0	1.30	44.6
Mark	Profile	Grade	QTY	Length	Area	Weight

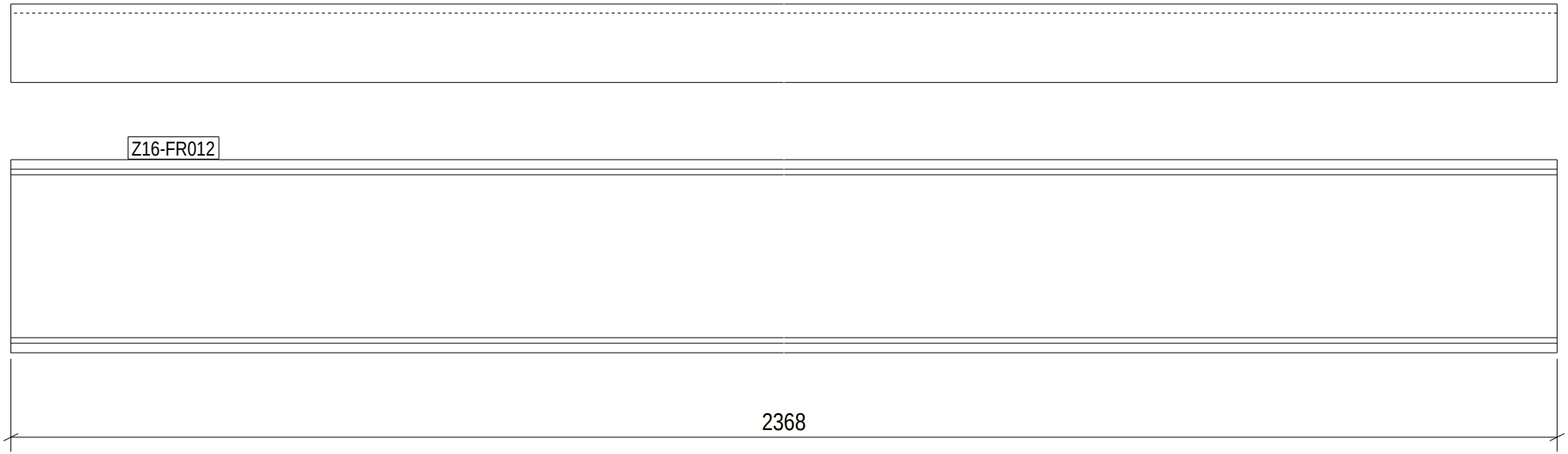

1 REQ'D AS DRAWN MK'D Z16-FR012

6 October Monorail
Engineering Unit
Valid For Construction

GENERAL NOTES:

1. THE DIMENSIONS SHOWN ARE NOMINAL (IN MILLIMETERS), U.N.O.
2. WELD SIZESHALL BE AISC MINIMUM OF 6 mm UNLESS NOTED OTHERWISE.
3. ALL FIELD WELDS SHALL BE INSPECTED PER QUALITY ASSURANCE AND SPECIAL INSPECTIONS.

REFERENCE DRAWINGS

1	93M-BOA-NAT-LOT-04833
2	93M-BOA-NAT-LOT-09170
3	93M-BOA-NAT-LOT-01976
4	93M-BOA-NAT-LOT-20021
5	
6	
7	
8	
9	

6TH OF OCTOBER CITY RAIL TRANSIT MONORAIL

The Authority | Hill International Consultant | Main Contractor | Structural Designer

KEY PLAN:

SCALE: AS SHOWN | SHOP DRAWING | DATE: 08/29/2023

DRAWING TITLE: 6TH OF OCTOBER MONORAIL SERVICE WALKWAYS ZONE(1016) Z16-FR012

REV	DATE	DSG	CHK	APP	AMENDMENTS	STATUS
B	08/29/2023	MAH	MAH	DRAW	ISSUED FOR INFORMATION	IFI
A	08/11/2022	MAH	MAH	DRAW	ISSUED FOR INFORMATION	IFI

Project Code	Rubric	Initiator	Lot	Ref	Number	Revision
93M	0476	ACC	60DEP	DWG	16205	B

Tekla structures

Approval is subject to approval of coordination package between multi-discipline.

REVIEWED WITH COMMENT
MONORAILS PROJECT

Length & Area & Weight per piece						
Z16-FR011	L70*7	S235JR	2	779.7	0.22	5.7
Mark	Profile	Grade	QTY	Length	Area	Weight

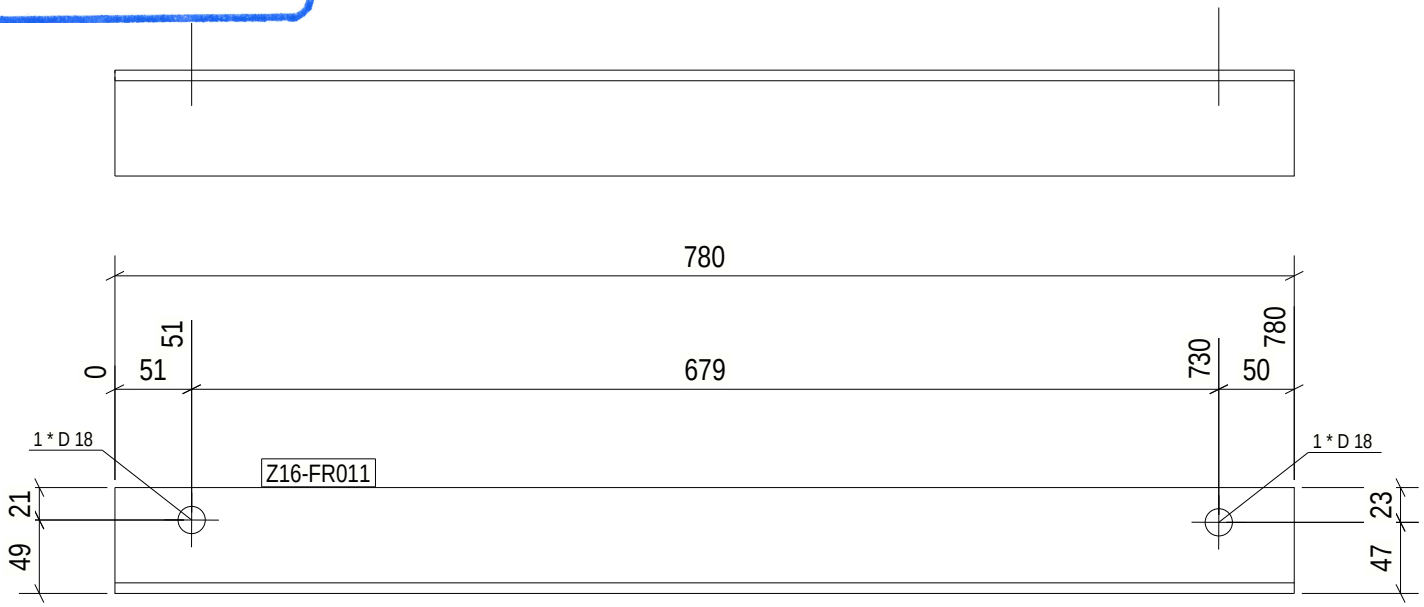

2 REQ'D AS DRAWN MK'D Z16-FR011

6 October Monorail
Engineering Unit
Valid For Construction

GENERAL NOTES:

1. THE DIMENSIONS SHOWN ARE NOMINAL (IN MILLIMETERS), U.N.O.
2. WELD SIZESHALL BE AISC MINIMUM OF 6 mm UNLESS NOTED OTHERWISE.
3. ALL FIELD WELDS SHALL BE INSPECTED PER QUALITY ASSURANCE AND SPECIAL INSPECTIONS.

REFERENCE DRAWINGS

1	93M-BOA-NAT-LOT-04833
2	93M-BOA-NAT-LOT-09170
3	93M-BOA-NAT-LOT-01976
4	93M-BOA-NAT-LOT-20021
5	
6	
7	
8	
9	

6TH OF OCTOBER CITY RAIL TRANSIT MONORAIL

The Authority — Hill International Consultant — Main Contractor — Structural Designer

KEY PLAN:

SCALE: AS SHOWN | SHOP DRAWING | DATE: 08/29/2023

DRAWING TITLE: 6TH OF OCTOBER MONORAIL SERVICE WALKWAYS ZONE(1016) Z16-FR011

REV	DATE	DSG	CHK	APP	AMENDMENTS	STATUS
B	08/29/2023	MAH	MAH	DRAW	ISSUED FOR INFORMATION	IFI
A	08/11/2022	MAH	MAH	DRAW	ISSUED FOR INFORMATION	IFI

Project Code	Rubric	Initiator	Lot	Ref	Number	Revision
9 3 M	0 4 7 6	A C C	6 0 D E P	D W G	1 6 2 0 6	B

Tekla structures

Approval is subject to approval of coordination package between multi-discipline.

REVIEWED WITH COMMENT
MONORAILS PROJECT

Length & Area & Weight per piece						
Z16-FR010	L70*7	S235JR	1	760.0	0.21	5.6
Mark	Profile	Grade	QTY	Length	Area	Weight

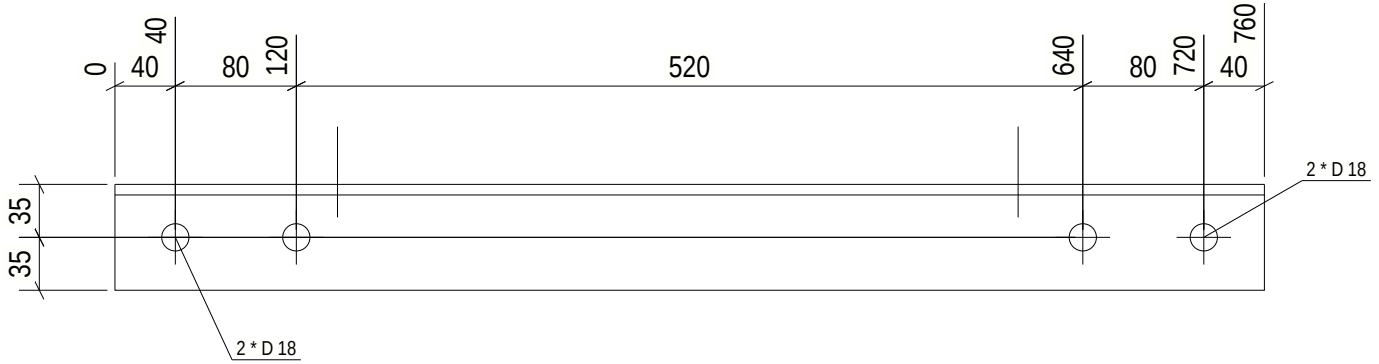

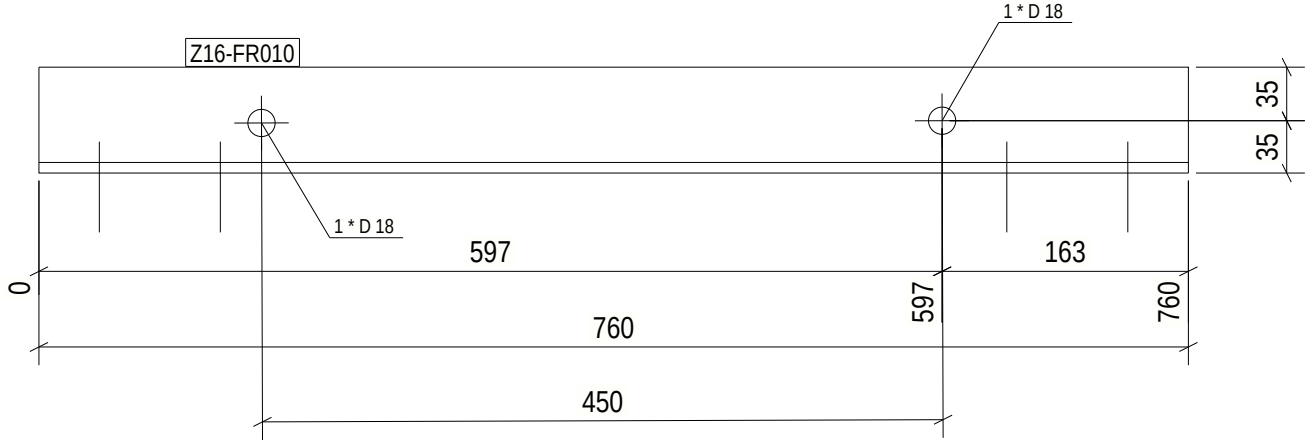

1 REQ'D AS DRAWN MK'D Z16-FR010

6 October Monorail
Engineering Unit
Valid For Construction

GENERAL NOTES:

1. THE DIMENSIONS SHOWN ARE NOMINAL (IN MILLIMETERS), U.N.O.
2. WELD SIZESHALL BE AISC MINIMUM OF 6 mm UNLESS NOTED OTHERWISE.
3. ALL FIELD WELDS SHALL BE INSPECTED PER QUALITY ASSURANCE AND SPECIAL INSPECTIONS.

REFERENCE DRAWINGS

1	93M-BOA-NAT-LOT-04833
2	93M-BOA-NAT-LOT-09170
3	93M-BOA-NAT-LOT-01976
4	93M-BOA-NAT-LOT-20021
5	
6	
7	
8	
9	

6TH OF OCTOBER CITY RAIL TRANSIT MONORAIL

The Authority | Hill International Consultant | Main Contractor | Structural Designer

KEY PLAN:

SCALE: AS SHOWN | SHOP DRAWING | DATE: 08/29/2023

DRAWING TITLE: 6TH OF OCTOBER MONORAIL SERVICE WALKWAYS ZONE(1016) Z16-FR010

REV	DATE	DSG	CHK	APP	AMENDMENTS	STATUS
B	08/29/2023	MAH	MAH	DRAW	ISSUED FOR INFORMATION	IFI
A	08/11/2022	MAH	MAH	DRAW	ISSUED FOR INFORMATION	IFI

Project Code	Rubric	Initiator	Lot	Ref	Number	Revision
9 3 M	0 4 7 6	A C C	6 0 D E P	D W G	1 6 2 0 7	B

Tekla structures

Approval is subject to approval of coordination package between multi-discipline.

REVIEWED WITH COMMENT
MONORAILS PROJECT

Length & Area & Weight per piece						
Z16-FR009	L70*7	S235JR	1	760.0	0.21	5.6
Mark	Profile	Grade	QTY	Length	Area	Weight

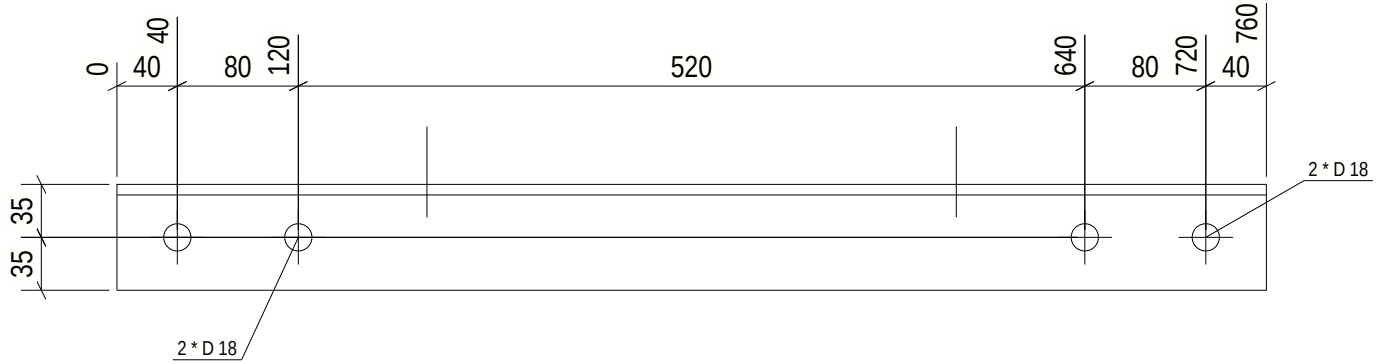

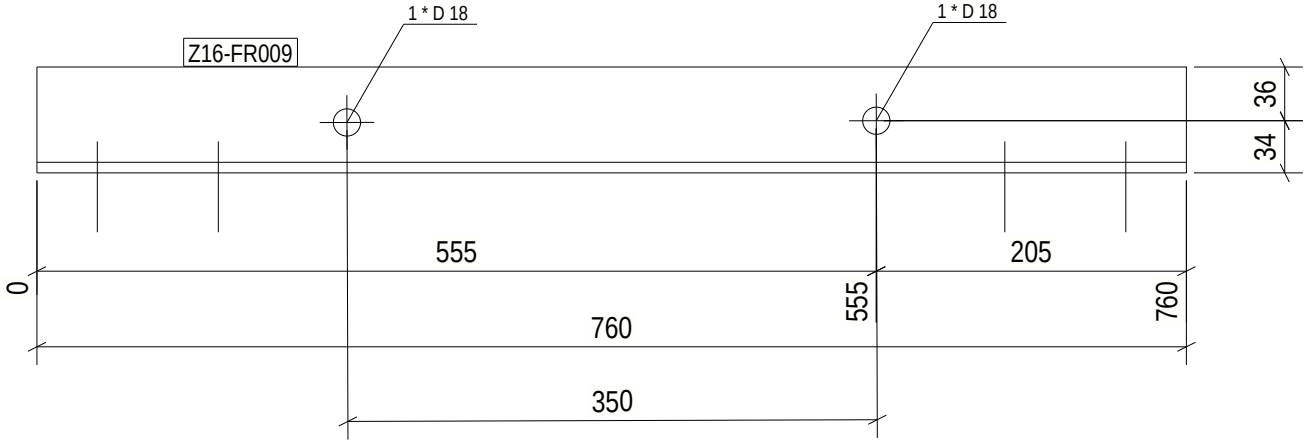

1 REQ'D AS DRAWN MK'D Z16-FR009

6 October Monorail
Engineering Unit
Valid For Construction

GENERAL NOTES:

1. THE DIMENSIONS SHOWN ARE NOMINAL (IN MILLIMETERS), U.N.O.
2. WELD SIZESHALL BE AISC MINIMUM OF 6 mm UNLESS NOTED OTHERWISE.
3. ALL FIELD WELDS SHALL BE INSPECTED PER QUALITY ASSURANCE AND SPECIAL INSPECTIONS.

REFERENCE DRAWINGS

1	93M-BOA-NAT-LOT-04833
2	93M-BOA-NAT-LOT-09170
3	93M-BOA-NAT-LOT-01976
4	93M-BOA-NAT-LOT-20021
5	
6	
7	
8	
9	

6TH OF OCTOBER CITY RAIL TRANSIT MONORAIL

The Authority — Hill International Consultant — Main Contractor — Structural Designer

KEY PLAN:

SCALE: AS SHOWN | SHOP DRAWING | DATE: 08/29/2023

DRAWING TITLE: 6TH OF OCTOBER MONORAIL SERVICE WALKWAYS ZONE(1016) Z16-FR009

REV	DATE	DSG	CHK	APP	AMENDMENTS	STATUS
B	08/29/2023	MAH	MAH	DRAW	ISSUED FOR INFORMATION	IFI
A	08/11/2022	MAH	MAH	DRAW	ISSUED FOR INFORMATION	IFI

Project Code	Rubric	Initiator	Lot	Ref	Number	Revision
9 3 M	0 4 7 6	A C C	6 0 D E P	D W G	1 6 2 0 8	B

Tekla structures

Approval is subject to approval of coordination package between multi-discipline.

REVIEWED WITH COMMENT
MONORAILS PROJECT

Length & Area & Weight per piece						
Z16-FR008	UPN160	S235JR	1	2368.0	1.30	44.6
Mark	Profile	Grade	QTY	Length	Area	Weight

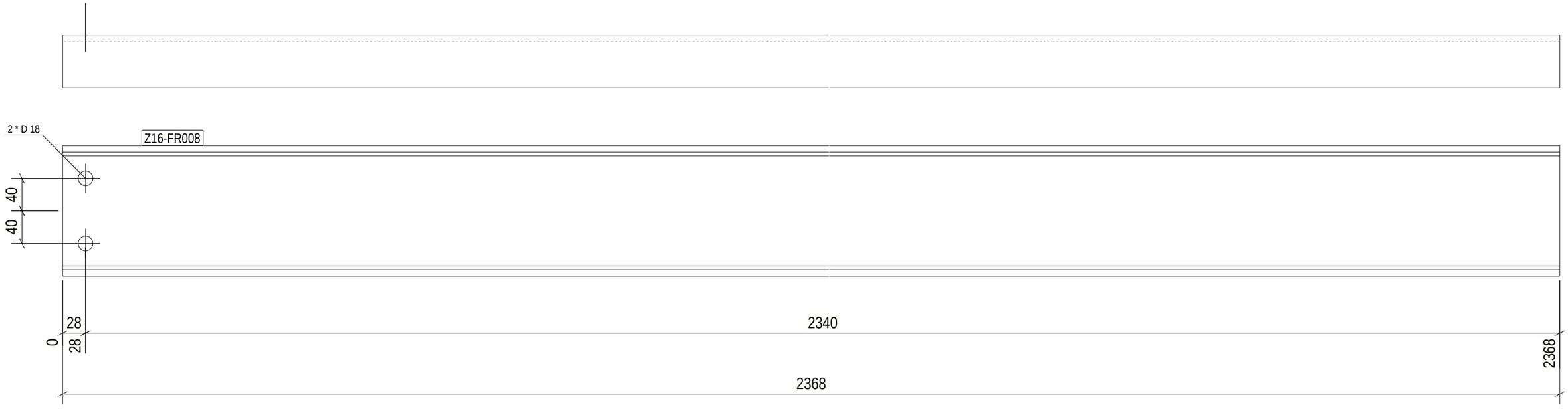

1 REQ'D AS DRAWN MK'D Z16-FR008

6 October: Monorail
Engineering Unit
Valid For Construction

GENERAL NOTES:

1. THE DIMENSIONS SHOWN ARE NOMINAL (IN MILLIMETERS), U.N.O.
2. WELD SIZESHALL BE AISC MINIMUM OF 6 mm UNLESS NOTED OTHERWISE.
3. ALL FIELD WELDS SHALL BE INSPECTED PER QUALITY ASSURANCE AND SPECIAL INSPECTIONS.

REFERENCE DRAWINGS

1	93M-BOA-NAT-LOT-04833
2	93M-BOA-NAT-LOT-09170
3	93M-BOA-NAT-LOT-01976
4	93M-BOA-NAT-LOT-20021
5	
6	
7	
8	
9	

6TH OF OCTOBER CITY RAIL TRANSIT MONORAIL

The Authority | Hill International Consultant | ORASCOM BOMBARDIER Main Contractor | INNOVA Structural Designer

KEY PLAN:

SCALE AS SHOWN | SHOPDRAWING | DATE 09/29/2023

REV	DATE	DSG.	CHK.	APP.	AMENDMENTS	STATUS
B	08/29/2023	M.KH	M.KH	DR.M.M	ISSUED FOR INFORMATION	IFI
A	09/21/2022	M.KH	M.KH	DR.M.M	ISSUED FOR INFORMATION	IFI

DRAWING TITLE

6TH OF OCTOBER MONORAIL
SERVICE WALKWAYS
ZONE(1016)
Z16-FR008

Project Code	Rubric	Initiator	Lot	Ref	Number	Revision
93M	0476	ACC60DEP	DWG	16209		B

Tekla structures

Approval is subject to approval of coordination package between multi-discipline.

REVIEWED WITH COMMENT
MONORAILS PROJECT

Length & Area & Weight per piece						
Z16-FR007	UPN160	S235JR	1	2368.0	1.30	44.6
Mark	Profile	Grade	QTY	Length	Area	Weight

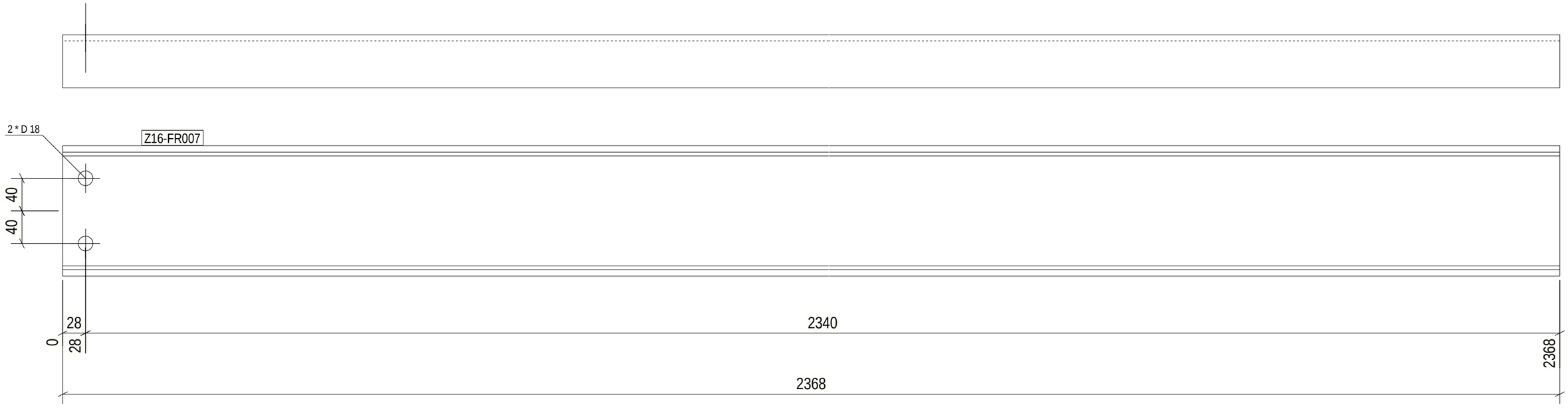

1 REQ'D AS DRAWN MK'D Z16-FR007

6 October Monorail
Engineering Unit
Valid For Construction

GENERAL NOTES:

1. THE DIMENSIONS SHOWN ARE NOMINAL (IN MILLIMETERS), U.N.O.
2. WELD SIZESHALL BE AISC MINIMUM OF 6 mm UNLESS NOTED OTHERWISE.
3. ALL FIELD WELDS SHALL BE INSPECTED PER QUALITY ASSURANCE AND SPECIAL INSPECTIONS.

REFERENCE DRAWINGS

1	93M-BOA-NAT-LOT-04833
2	93M-BOA-NAT-LOT-09170
3	93M-BOA-NAT-LOT-01976
4	93M-BOA-NAT-LOT-20021
5	
6	
7	
8	
9	

6TH OF OCTOBER CITY RAIL TRANSIT MONORAIL

The Authority | Hill International Consultant | ORASCOM CONSTRUCTION / BOMBARDIER Main Contractor | INNOVA TRANSPORTATION Structural Designer

KEY PLAN:

SCALE	SHOPDRAWING	DATE
AS SHOWN		09/29/2023

REV	DATE	DSG.	CHK.	APP.	AMENDMENTS	STATUS
B	08/29/2023	M.KH	M.KH	DR.M.M	ISSUED FOR INFORMATION	IFI
A	09/21/2022	M.KH	M.KH	DR.M.M	ISSUED FOR INFORMATION	IFI

DRAWING TITLE

6TH OF OCTOBER MONORAIL
SERVICE WALKWAYS
ZONE(1016)
Z16-FR007

Project Code	Rubric	Initiator	Lot	Ref	Number	Revision
93M	0476	ACC60DEP	DWG	16210		B

Tekla structures

Approval is subject to approval of coordination package between multi-discipline.

REVIEWED WITH COMMENT
MONORAILS PROJECT

Length & Area & Weight per piece						
Z16-FR006	UPN160	S235JR	1	2368.0	1.30	44.6
Mark	Profile	Grade	QTY	Length	Area	Weight

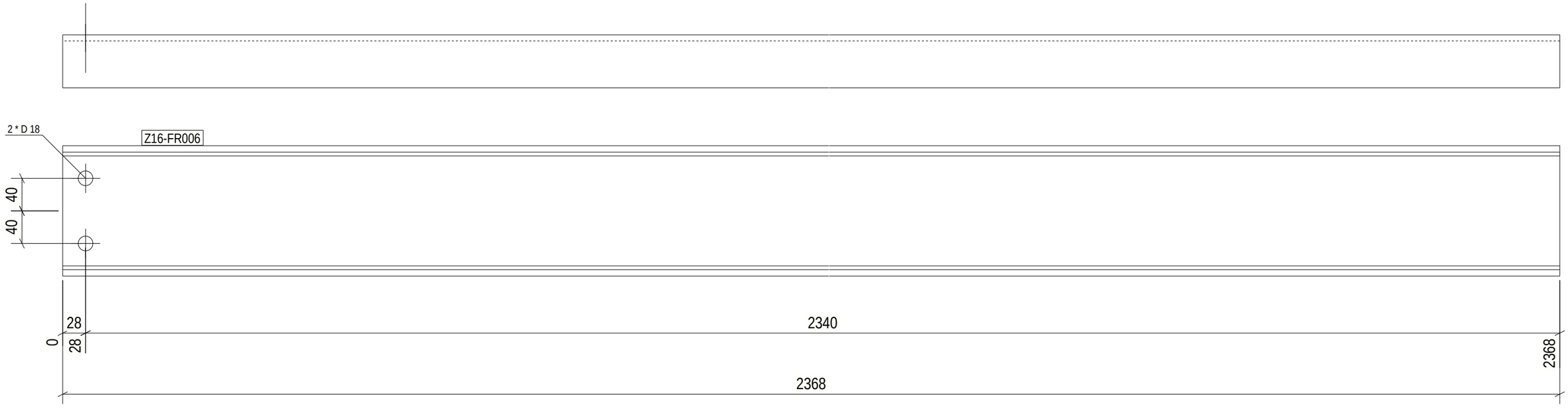

1 REQ'D AS DRAWN MK'D Z16-FR006

6 October Monorail
Engineering Unit
Valid For Construction

GENERAL NOTES:

1. THE DIMENSIONS SHOWN ARE NOMINAL (IN MILLIMETERS), U.N.O.
2. WELD SIZESHALL BE AISC MINIMUM OF 6 mm UNLESS NOTED OTHERWISE.
3. ALL FIELD WELDS SHALL BE INSPECTED PER QUALITY ASSURANCE AND SPECIAL INSPECTIONS.

REFERENCE DRAWINGS

1	93M-BOA-NAT-LOT-04833
2	93M-BOA-NAT-LOT-09170
3	93M-BOA-NAT-LOT-01976
4	93M-BOA-NAT-LOT-20021
5	
6	
7	
8	
9	

6TH OF OCTOBER CITY RAIL TRANSIT MONORAIL

The Authority | Hill International Consultant | ORASCOM BOMBARDIER Main Contractor | INNOVA Structural Designer

KEY PLAN:

SCALE AS SHOWN | SHOPDRAWING | DATE 09/29/2023

REV	DATE	DSG.	CHK.	APP.	AMENDMENTS	STATUS
B	08/29/2023	M.KH	M.KH	DR.M.M	ISSUED FOR INFORMATION	IFI
A	09/21/2022	M.KH	M.KH	DR.M.M	ISSUED FOR INFORMATION	IFI

DRAWING TITLE

6TH OF OCTOBER MONORAIL
SERVICE WALKWAYS
ZONE(1016)
Z16-FR006

Project Code	Rubric	Initiator	Lot	Ref	Number	Revision
93M	0476	ACC60DEP	DWG	16211		B

Tekla structures

Approval is subject to approval of coordination package between multi-discipline.

REVIEWED WITH COMMENT
MONORAILS PROJECT

Length & Area & Weight per piece						
Z16-FR005	UPN160	S235JR	1	2368.0	1.30	44.6
Mark	Profile	Grade	QTY	Length	Area	Weight

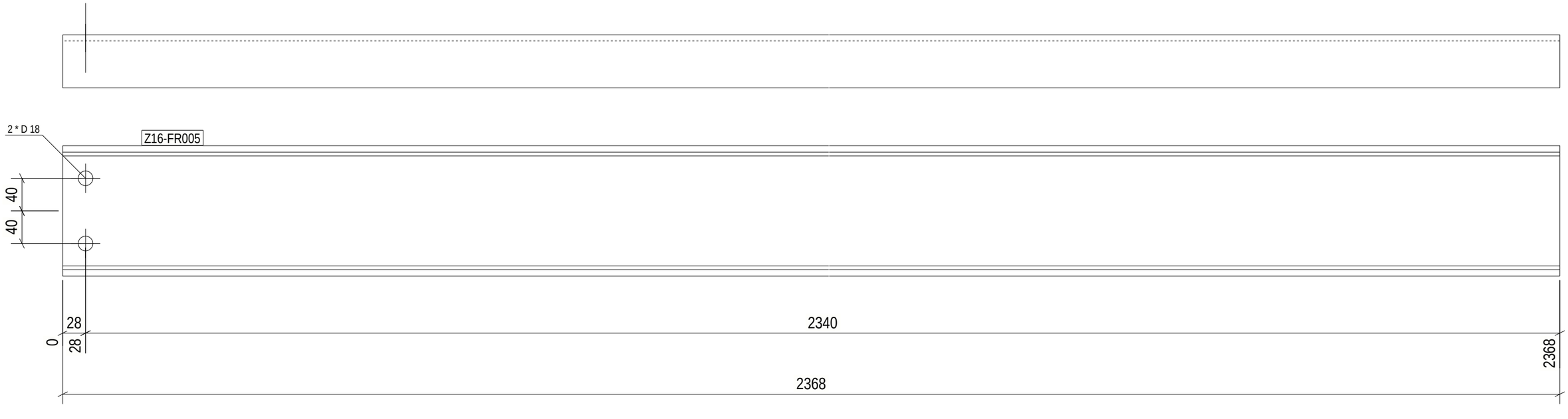

1 REQ'D AS DRAWN MK'D Z16-FR005

6 October Monorail
Engineering Unit
Valid For Construction

GENERAL NOTES:

1. THE DIMENSIONS SHOWN ARE NOMINAL (IN MILLIMETERS), U.N.O.
2. WELD SIZESHALL BE AISC MINIMUM OF 6 mm UNLESS NOTED OTHERWISE.
3. ALL FIELD WELDS SHALL BE INSPECTED PER QUALITY ASSURANCE AND SPECIAL INSPECTIONS.

REFERENCE DRAWINGS

1	93M-BOA-NAT-LOT-04833
2	93M-BOA-NAT-LOT-09170
3	93M-BOA-NAT-LOT-01976
4	93M-BOA-NAT-LOT-20021
5	
6	
7	
8	
9	

6TH OF OCTOBER CITY RAIL TRANSIT MONORAIL

The Authority | Consultant: Hill International | Main Contractor: ORASCOM CONSTRUCTION, BOMBARDIER | Structural Designer: INNOVA TRANSPORTATION

KEY PLAN:

SCALE: AS SHOWN | SHOPDRAWING | DATE: 09/29/2023

REV	DATE	DSG.	CHK.	APP.	AMENDMENTS	STATUS
B	08/29/2023	M.KH	M.KH	DR.M.M	ISSUED FOR INFORMATION	IFI
A	09/21/2022	M.KH	M.KH	DR.M.M	ISSUED FOR INFORMATION	IFI

DRAWING TITLE

6TH OF OCTOBER MONORAIL
SERVICE WALKWAYS
ZONE(1016)
Z16-FR005

Project Code	Rubric	Initiator	Lot	Ref	Number	Revision
93M	0476	ACC60DEP	DWG	16212		B

Tekla structures

Approval is subject to approval of coordination package between multi-discipline.

REVIEWED WITH COMMENT
MONORAILS PROJECT

Length & Area & Weight per piece						
Z16-FR001	UPN160	S235JR	13	2368.0	1.30	44.6
Mark	Profile	Grade	QTY	Length	Area	Weight

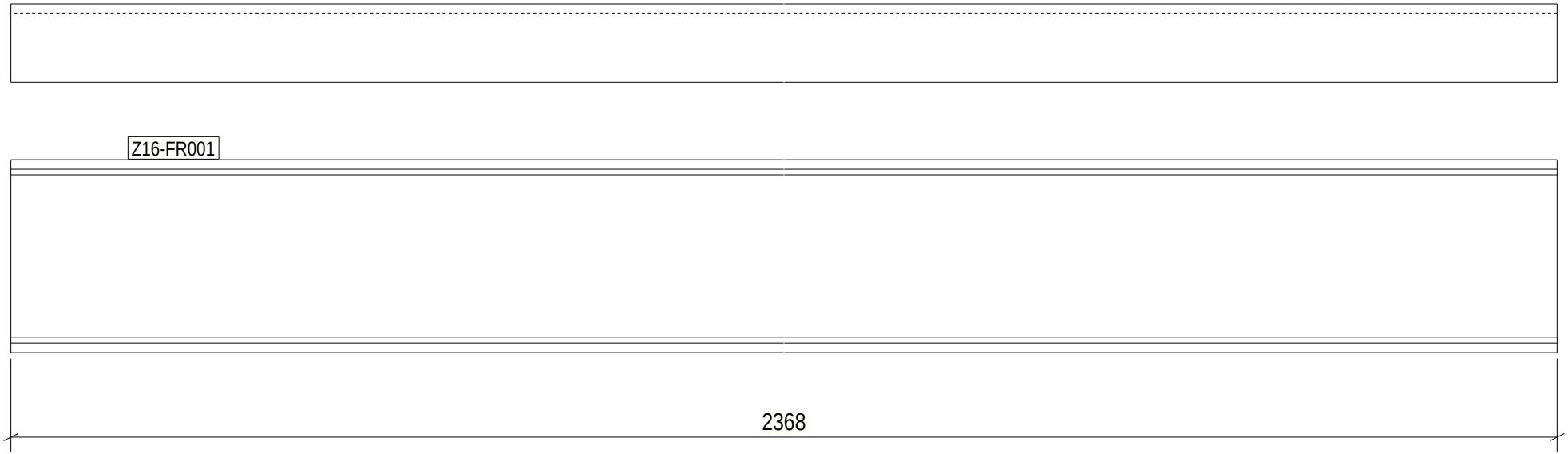

13 REQ'D AS DRAWN MK'D Z16-FR001

6 October Monorail
Engineering Unit
Valid For Construction

GENERAL NOTES:

1. THE DIMENSIONS SHOWN ARE NOMINAL (IN MILLIMETERS), U.N.O.
2. WELD SIZESHALL BE AISC MINIMUM OF 6 mm UNLESS NOTED OTHERWISE.
3. ALL FIELD WELDS SHALL BE INSPECTED PER QUALITY ASSURANCE AND SPECIAL INSPECTIONS.

REFERENCE DRAWINGS

1	93M-BOA-NAT-LOT-04833
2	93M-BOA-NAT-LOT-09170
3	93M-BOA-NAT-LOT-01976
4	93M-BOA-NAT-LOT-20021
5	
6	
7	
8	
9	

6TH OF OCTOBER CITY RAIL TRANSIT MONORAIL

The Authority — Hill International Consultant — Main Contractor — Structural Designer

KEY PLAN:

SCALE: AS SHOWN | SHOP DRAWING | DATE: 08/29/2023

DRAWING TITLE: 6TH OF OCTOBER MONORAIL SERVICE WALKWAYS ZONE(1016) Z16-FR001

REV	DATE	DSG	CHK	APP	AMENDMENTS	STATUS
B	08/29/2023	MAH	MAH	DRAW	ISSUED FOR INFORMATION	IFI
A	08/11/2022	MAH	MAH	DRAW	ISSUED FOR INFORMATION	IFI

Project Code	Rubric	Initiator	Lot	Ref	Number	Revision
9 3 M	0 4 7 6	A C C	6 0 D E P	D W G	1 6 2 1 3	B

Tekla structures

Same comments as
93M-0476-ACC-60DEP-DWG-16053-B.

REVIEWED WITH COMMENT
MONORAILS PROJECT

Length & Area & Weight per piece						
Z16-CHQ043	CHQD5*1103.4	S235JR	2	3090.0	6.63	129.0
Mark	Profile	Grade	QTY	Length	Area	Weight

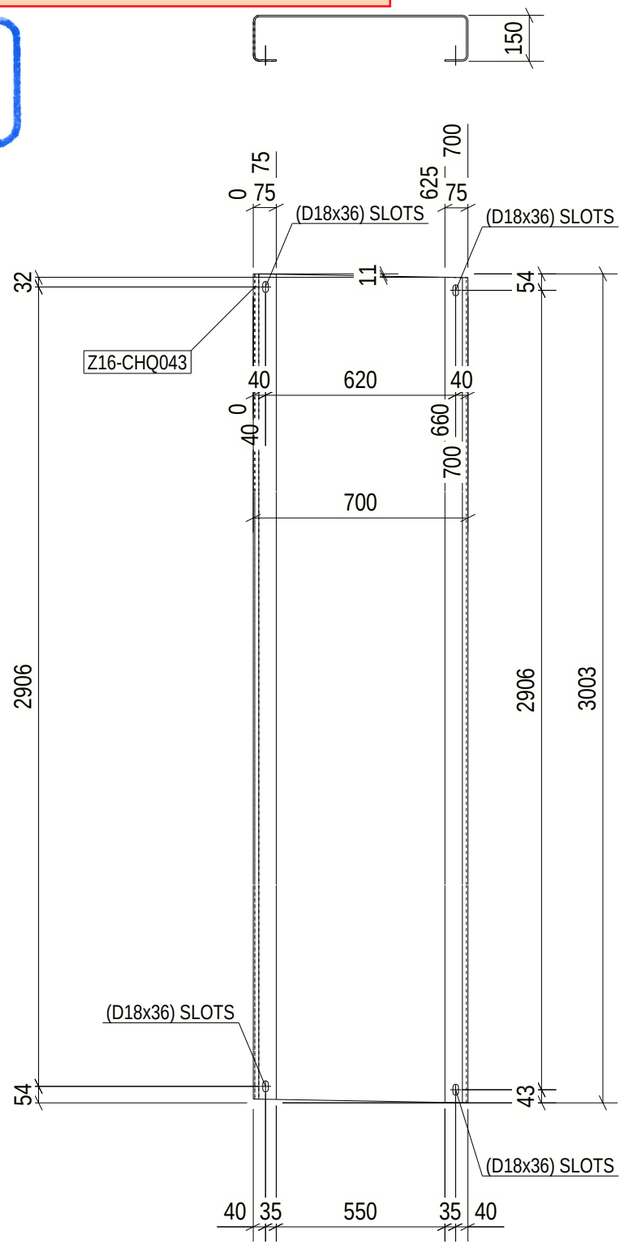

2 REQ'D AS DRAWN MK'D Z16-CHQ043

6 October Monorail
Engineering Unit
Valid For Construction

GENERAL NOTES:

1. THE DIMENSIONS SHOWN ARE NOMINAL (IN MILLIMETERS), U.N.O.
2. WELD SIZESHALL BE AISC MINIMUM OF 6 mm UNLESS NOTED OTHERWISE.
3. ALL FIELD WELDS SHALL BE INSPECTED PER QUALITY ASSURANCE AND SPECIAL INSPECTIONS.

REFERENCE DRAWINGS

1	93M-BOA-NAT-LOT-04833
2	93M-BOA-NAT-LOT-09170
3	93M-BOA-NAT-LOT-01976
4	93M-BOA-NAT-LOT-20021
5	
6	
7	
8	
9	

6TH OF OCTOBER CITY RAIL TRANSIT MONORAIL

The Authority | Consultant: Hill International | Main Contractor: ORASCOM CONSTRUCTION, BOMBARDIER | Structural Designer: INNOVA TRANSPORTATION

KEY PLAN:

SCALE: AS SHOWN | SHOPDRAWING | DATE: 09/29/2023

REV.	DATE	DSG.	CHK.	APP.	AMENDMENTS	STATUS
B	08/29/2023	M.KH	M.KH	DR.M.M	ISSUED FOR INFORMATION	IFI
A	09/21/2022	M.KH	M.KH	DR.M.M	ISSUED FOR INFORMATION	IFI

DRAWING TITLE
6TH OF OCTOBER MONORAIL
SERVICE WALKWAYS
ZONE(1016)
Z16-CHQ043

Project Code	Rubric	Initiator	Lot	Ref	Number	Revision
93M	0476	ACC	60DEP	DWG	16214	B

Tekla structures

Approval is subject to approval of coordination package between multi-discipline.

REVIEWED WITH COMMENT
MONORAILS PROJECT

Length & Area & Weight per piece						
Z16-CHQ042	CHQD_PL5*917.1	S235JR	1	1500.0	2.63	51.0
Mark	Profile	Grade	QTY	Length	Area	Weight

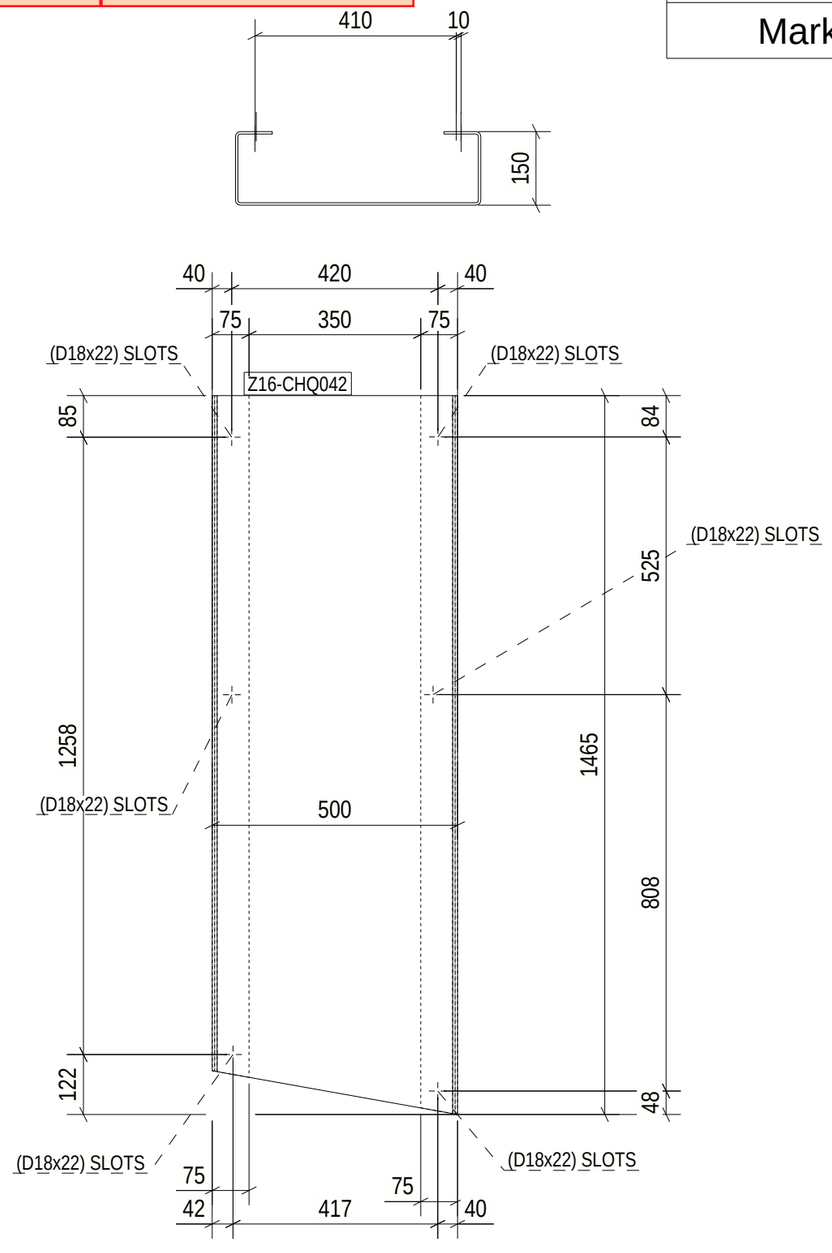

1 REQ'D AS DRAWN MK'D Z16-CHQ042

6 October Monorail
Engineering Unit
Valid For Construction

GENERAL NOTES:

1. THE DIMENSIONS SHOWN ARE NOMINAL (IN MILLIMETERS), U.N.O.
2. WELD SIZESHALL BE AISC MINIMUM OF 6 mm UNLESS NOTED OTHERWISE.
3. ALL FIELD WELDS SHALL BE INSPECTED PER QUALITY ASSURANCE AND SPECIAL INSPECTIONS.

REFERENCE DRAWINGS

1	93M-BOA-NAT-LOT-04833
2	93M-BOA-NAT-LOT-09170
3	93M-BOA-NAT-LOT-01976
4	93M-BOA-NAT-LOT-20021
5	
6	
7	
8	
9	

6TH OF OCTOBER CITY RAIL TRANSIT MONORAIL

The Authority — Hill International Consultant — Main Contractor — Structural Designer

KEY PLAN:

SCALE	SHOPDRAWING	DATE
AS SHOWN		09/29/2023

REV	DATE	DSG.	CHK.	APP.	AMENDMENTS	STATUS
B	08/29/2023	M.KH	M.KH	DR.M.M	ISSUED FOR INFORMATION	IFI
A	09/21/2022	M.KH	M.KH	DR.M.M	ISSUED FOR INFORMATION	IFI

DRAWING TITLE

6TH OF OCTOBER MONORAIL
SERVICE WALKWAYS
ZONE(1016)
Z16-CHQ042

Project Code	Rubric	Initiator	Lot	Ref	Number	Revision
93	M047	ACC60	DEP	DWG	1621	5 B

Tekla structures

Approval is subject to approval of coordination package between multi-discipline.

REVIEWED WITH COMMENT
MONORAILS PROJECT

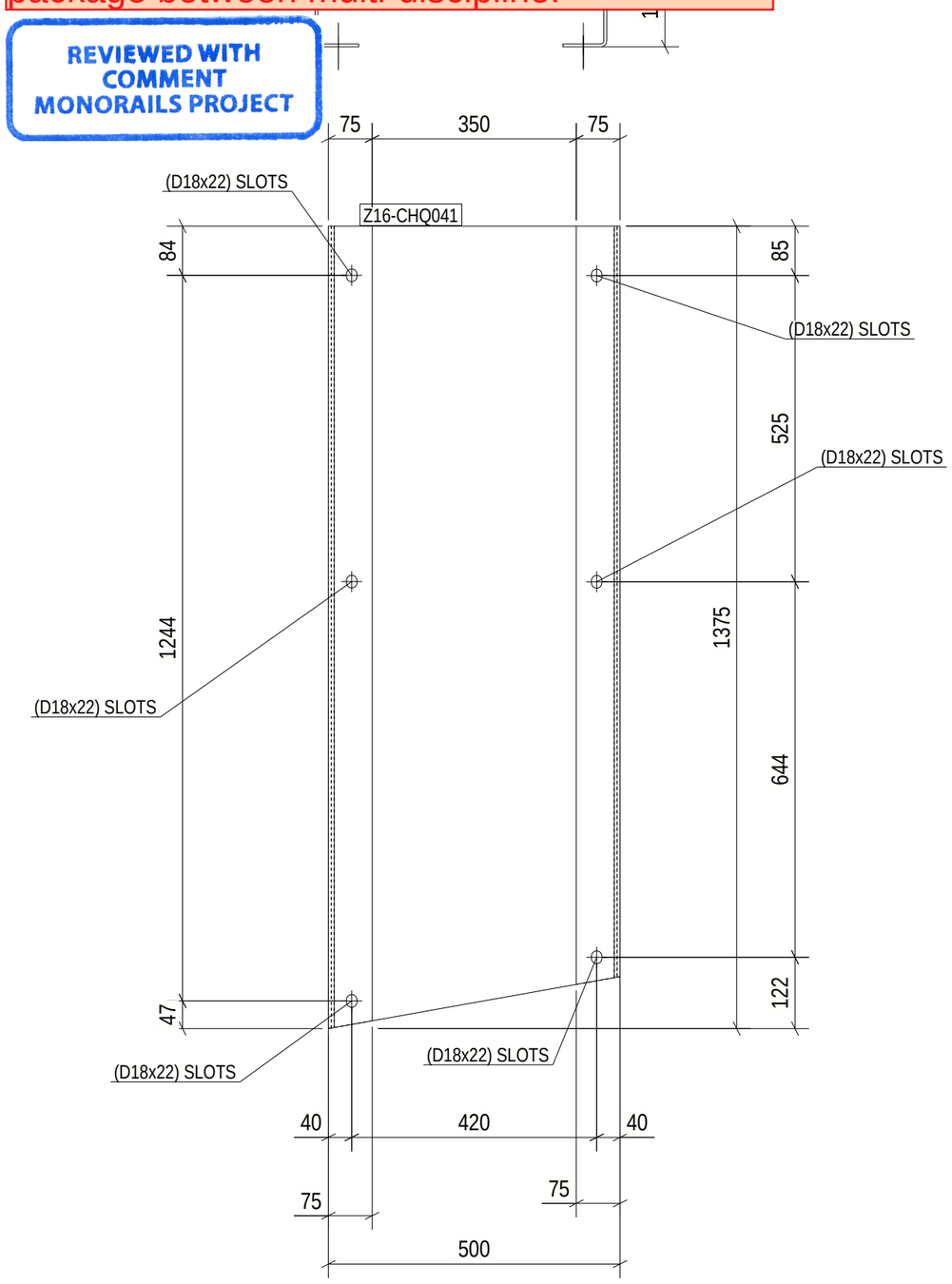

Length & Area & Weight per piece						
Z16-CHQ041	CHQD_PL5*917.1	S235JR	1	1500.0	2.46	47.8
Mark	Profile	Grade	QTY	Length	Area	Weight

1 REQ'D AS DRAWN MK'D Z16-CHQ041

6 October: Monorail
Engineering Unit
Valid For Construction

GENERAL NOTES:

1. THE DIMENSIONS SHOWN ARE NOMINAL (IN MILLIMETERS), U.N.O.
2. WELD SIZESHALL BE AISC MINIMUM OF 6 mm UNLESS NOTED OTHERWISE.
3. ALL FIELD WELDS SHALL BE INSPECTED PER QUALITY ASSURANCE AND SPECIAL INSPECTIONS.

REFERENCE DRAWINGS

1	93M-BOA-NAT-LOT-04833
2	93M-BOA-NAT-LOT-09170
3	93M-BOA-NAT-LOT-01976
4	93M-BOA-NAT-LOT-20021
5	
6	
7	
8	
9	

6TH OF OCTOBER CITY RAIL TRANSIT MONORAIL

The Authority | Consultant: Hill International | Main Contractor: ORASCOM CONSTRUCTION, BOMBARDIER | Structural Designer: INNOVA FOUNDATION

KEY PLAN:

SCALE	SHOPDRAWING	DATE
AS SHOWN		09/29/2023

REV	DATE	DSG.	CHK.	APP.	AMENDMENTS	STATUS
B	08/29/2023	M.KH	M.KH	DR.M.M	ISSUED FOR INFORMATION	IFI
A	09/21/2022	M.KH	M.KH	DR.M.M	ISSUED FOR INFORMATION	IFI

DRAWING TITLE
6TH OF OCTOBER MONORAIL
SERVICE WALKWAYS
ZONE(1016)
Z16-CHQ041

Project Code	Rubric	Initiator	Lot	Ref	Number	Revision
93	M047	ACC60	DEP	DWG	1621	6 B

Tekla structures

Approval is subject to approval of coordination package between multi-discipline.

REVIEWED WITH COMMENT
MONORAILS PROJECT

Length & Area & Weight per piece						
Z16-CHQ040	CHQD_PL5*917.1	S235JR	1	1500.0	1.99	38.6
Mark	Profile	Grade	QTY	Length	Area	Weight

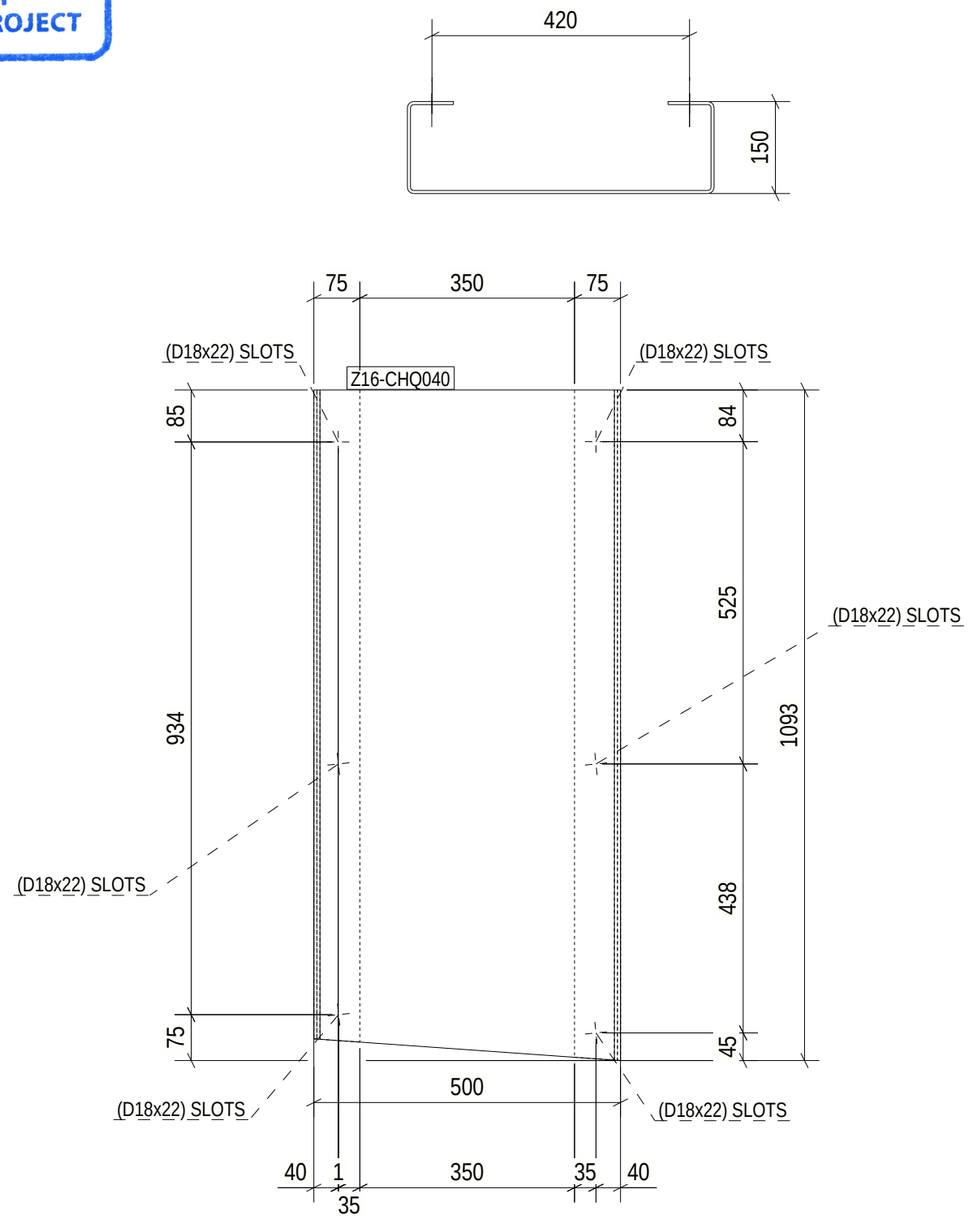

1 REQ'D AS DRAWN MK'D Z16-CHQ040

6 October: Monorail
Engineering Unit
Valid For Construction

GENERAL NOTES:

1. THE DIMENSIONS SHOWN ARE NOMINAL (IN MILLIMETERS), U.N.O.
2. WELD SIZESHALL BE AISC MINIMUM OF 6 mm UNLESS NOTED OTHERWISE.
3. ALL FIELD WELDS SHALL BE INSPECTED PER QUALITY ASSURANCE AND SPECIAL INSPECTIONS.

REFERENCE DRAWINGS

1	93M-BOA-NAT-LOT-04833
2	93M-BOA-NAT-LOT-09170
3	93M-BOA-NAT-LOT-01976
4	93M-BOA-NAT-LOT-20021
5	
6	
7	
8	
9	

6TH OF OCTOBER CITY RAIL TRANSIT MONORAIL

The Authority | Consultant: Hill International | Main Contractor: ORASCOM CONSTRUCTION, BOMBARDIER | Structural Designer: INNOVA TRANSPORTATION

KEY PLAN:

SCALE	SHOPDRAWING	DATE
AS SHOWN		09/29/2023

REV	DATE	DSG.	CHK.	APP.	AMENDMENTS	STATUS
B	08/29/2023	M.KH	M.KH	DR.M.M	ISSUED FOR INFORMATION	IFI
A	09/21/2022	M.KH	M.KH	DR.M.M	ISSUED FOR INFORMATION	IFI

DRAWING TITLE
6TH OF OCTOBER MONORAIL
SERVICE WALKWAYS
ZONE(1016)
Z16-CHQ040

Project Code	Rubric	Initiator	Lot	Ref	Number	Revision
93M	0476	ACC60DEP	DWG	16217		B

Tekla structures

Approval is subject to approval of coordination package between multi-discipline.

REVIEWED WITH COMMENT
MONORAILS PROJECT

Length & Area & Weight per piece						
Z16-CHQ039	CHQD_PL5*917.1	S235JR	1	1500.0	1.93	37.3
Mark	Profile	Grade	QTY	Length	Area	Weight

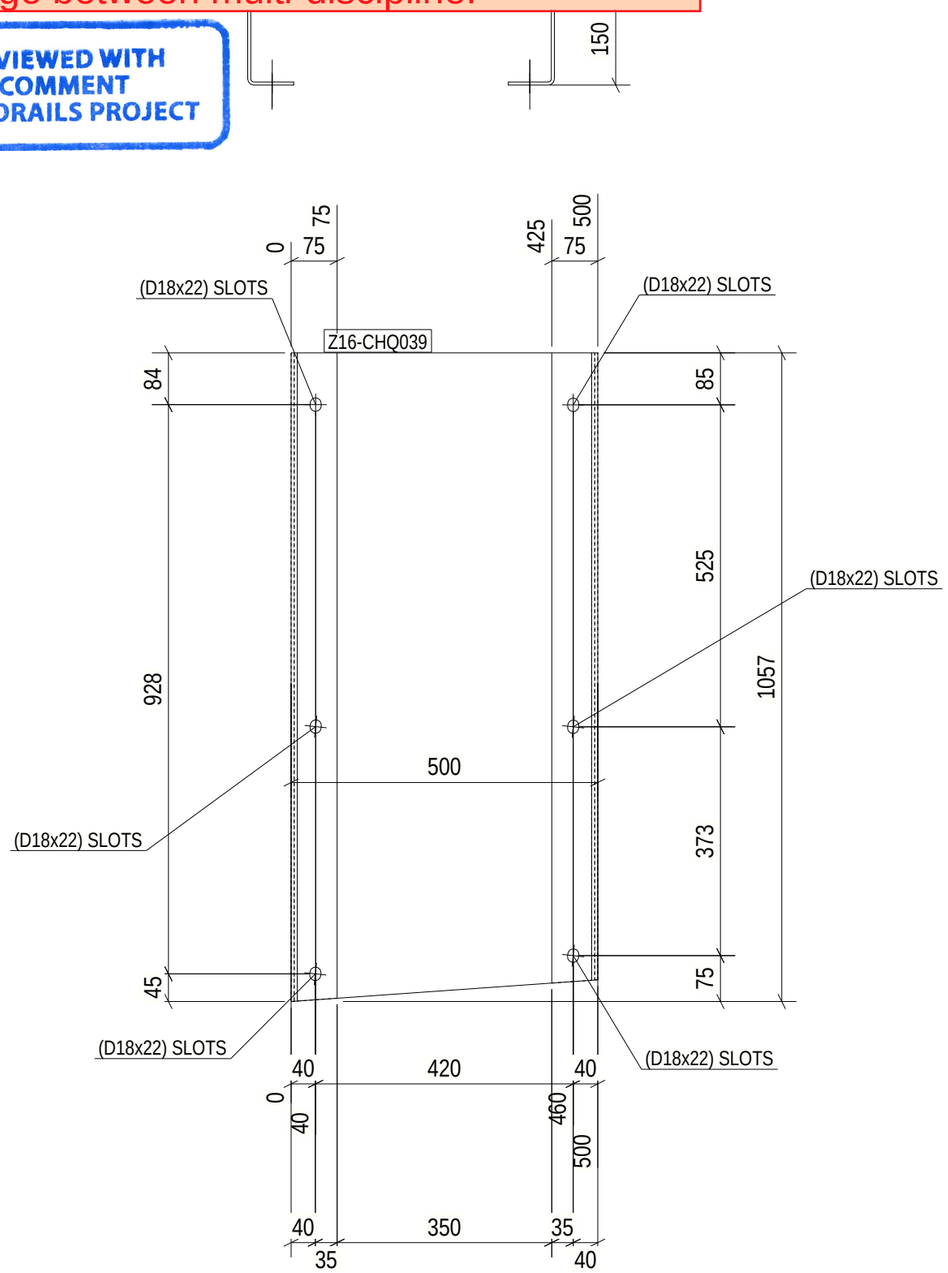

1 REQ'D AS DRAWN MK'D Z16-CHQ039

6 October: Monorail
Engineering Unit
Valid For Construction

GENERAL NOTES:

1. THE DIMENSIONS SHOWN ARE NOMINAL (IN MILLIMETERS), U.N.O.
2. WELD SIZESHALL BE AISC MINIMUM OF 6 mm UNLESS NOTED OTHERWISE.
3. ALL FIELD WELDS SHALL BE INSPECTED PER QUALITY ASSURANCE AND SPECIAL INSPECTIONS.

REFERENCE DRAWINGS

1	93M-BOA-NAT-LOT-04833
2	93M-BOA-NAT-LOT-09170
3	93M-BOA-NAT-LOT-01976
4	93M-BOA-NAT-LOT-20021
5	
6	
7	
8	
9	

6TH OF OCTOBER CITY RAIL TRANSIT MONORAIL

The Authority — Hill International Consultant — Main Contractor — Structural Designer

KEY PLAN:

SCALE: AS SHOWN | SHOPDRAWING | DATE: 09/29/2023

REV	DATE	DSG.	CHK.	APP.	AMENDMENTS	STATUS
B	08/29/2023	M.KH	M.KH	DR.M.M	ISSUED FOR INFORMATION	IFI
A	09/21/2022	M.KH	M.KH	DR.M.M	ISSUED FOR INFORMATION	IFI

DRAWING TITLE
6TH OF OCTOBER MONORAIL
SERVICE WALKWAYS
ZONE(1016)
Z16-CHQ039

Project Code	Rubric	Initiator	Lot	Ref	Number	Revision
93M	0476	ACC	60DE	P	DWG	16218	B

Tekla structures

Same comments as
93M-0476-ACC-60DEP-DWG-16053-B.

REVIEWED WITH COMMENT
MONORAILS PROJECT

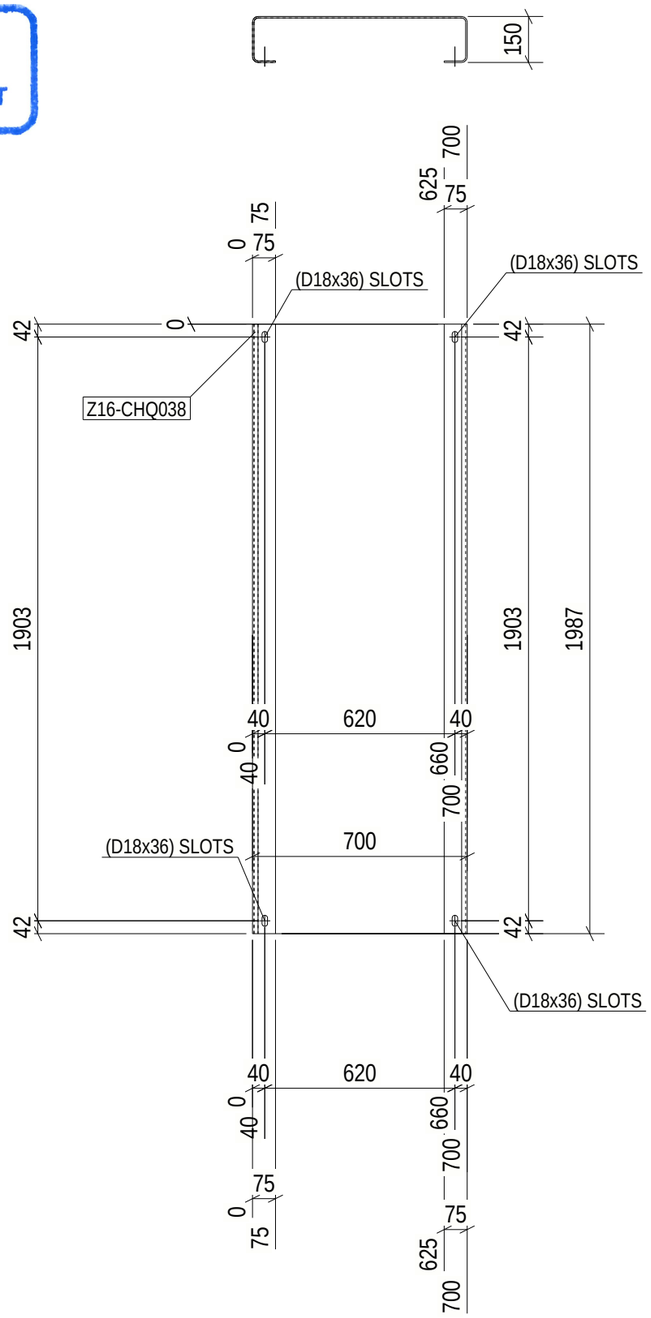

Length & Area & Weight per piece						
Z16-CHQ038	CHQD5*1103.4	S235JR	1	2087.2	4.41	85.7
Mark	Profile	Grade	QTY	Length	Area	Weight

1 REQ'D AS DRAWN MK'D Z16-CHQ038

6 October Monorail
Engineering Unit
Valid For Construction

GENERAL NOTES:

1. THE DIMENSIONS SHOWN ARE NOMINAL (IN MILLIMETERS), U.N.O.
2. WELD SIZESHALL BE AISC MINIMUM OF 6 mm UNLESS NOTED OTHERWISE.
3. ALL FIELD WELDS SHALL BE INSPECTED PER QUALITY ASSURANCE AND SPECIAL INSPECTIONS.

REFERENCE DRAWINGS

1	93M-BOA-NAT-LOT-04833
2	93M-BOA-NAT-LOT-09170
3	93M-BOA-NAT-LOT-01976
4	93M-BOA-NAT-LOT-20021
5	
6	
7	
8	
9	

6TH OF OCTOBER CITY RAIL TRANSIT MONORAIL

The Authority | Consultant: Hill International | Main Contractor: ORASCOM CONSTRUCTION, BOMBARDIER | Structural Designer: INNOVA TRANSPORTATION

KEY PLAN:

SCALE	SHOPDRAWING	DATE
AS SHOWN		09/29/2023

REV	DATE	DSG.	CHK.	APP.	AMENDMENTS	STATUS
B	08/29/2023	M.KH	M.KH	DR.M.M	ISSUED FOR INFORMATION	IFI
A	09/21/2022	M.KH	M.KH	DR.M.M	ISSUED FOR INFORMATION	IFI

DRAWING TITLE

6TH OF OCTOBER MONORAIL
SERVICE WALKWAYS
ZONE(1016)
Z16-CHQ038

Project Code	Rubric	Initiator	Lot	Ref	Number	Revision
93M	0476	ACC	60DEP	DWG	16219	B

Tekla structures

Same comments as
93M-0476-ACC-60DEP-DWG-16053-B.

REVIEWED WITH COMMENT
MONORAILS PROJECT

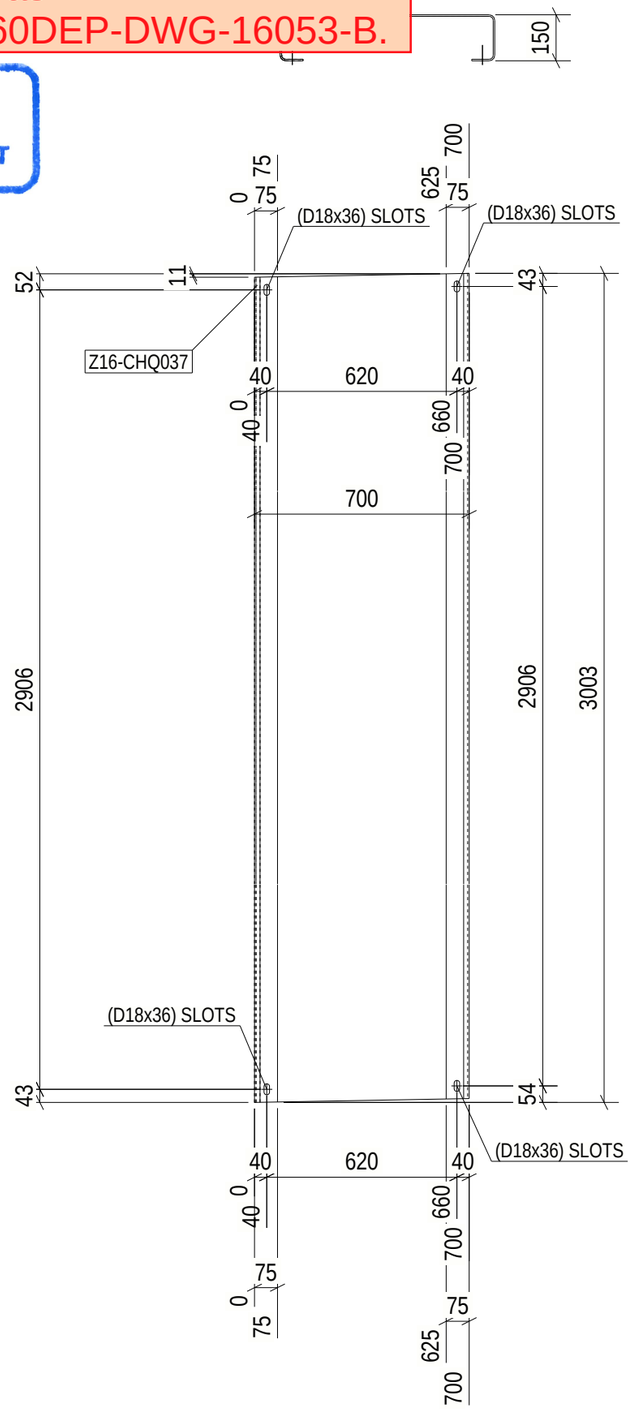

Length & Area & Weight per piece						
Z16-CHQ037	CHQD5*1103.4	S235JR	1	3090.0	6.63	129.0
Mark	Profile	Grade	QTY	Length	Area	Weight

1 REQ'D AS DRAWN MK'D Z16-CHQ037

6 October Monorail
Engineering Unit
Valid For Construction

GENERAL NOTES:

1. THE DIMENSIONS SHOWN ARE NOMINAL (IN MILLIMETERS), U.N.O.
2. WELD SIZESHALL BE AISC MINIMUM OF 6 mm UNLESS NOTED OTHERWISE.
3. ALL FIELD WELDS SHALL BE INSPECTED PER QUALITY ASSURANCE AND SPECIAL INSPECTIONS.

REFERENCE DRAWINGS

1	93M-BOA-NAT-LOT-04833
2	93M-BOA-NAT-LOT-09170
3	93M-BOA-NAT-LOT-01976
4	93M-BOA-NAT-LOT-20021
5	
6	
7	
8	
9	

6TH OF OCTOBER CITY RAIL TRANSIT MONORAIL

The Authority | Consultant: Hill International | Main Contractor: ORASCOM CONSTRUCTION, BOMBARDIER | Structural Designer: INNOVA TRANSPORTATION

KEY PLAN:

SCALE: AS SHOWN | SHOPDRAWING | DATE: 09/29/2023

REV	DATE	DSG.	CHK.	APP.	AMENDMENTS	STATUS
B	08/29/2023	M.KH	M.KH	DR.M.M	ISSUED FOR INFORMATION	IFI
A	09/21/2022	M.KH	M.KH	DR.M.M	ISSUED FOR INFORMATION	IFI

DRAWING TITLE
6TH OF OCTOBER MONORAIL
SERVICE WALKWAYS
ZONE(1016)
Z16-CHQ037

Project Code	Rubric	Initiator	Lot	Ref	Number	Revision
93M	0476	ACC	60DEP	DWG	16220	B

Tekla structures

Same comments as 93M-0476-ACC-60DEP-DWG-16053-B.

REVIEWED WITH COMMENT MONORAILS PROJECT

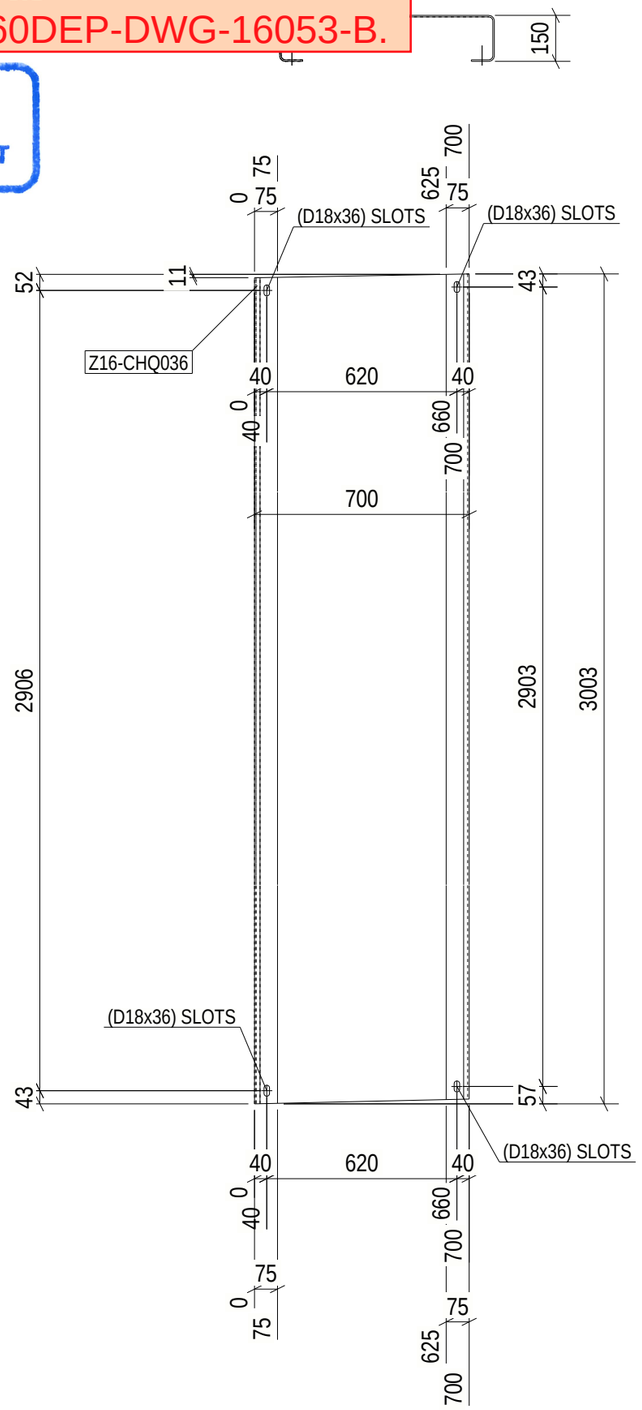

Length & Area & Weight per piece						
Z16-CHQ036	CHQD5*1103.4	S235JR	1	3088.3	6.63	128.9
Mark	Profile	Grade	QTY	Length	Area	Weight

1 REQ'D AS DRAWN MK'D Z16-CHQ036

6 October: Monorail Engineering Unit Valid For Construction

GENERAL NOTES:

1. THE DIMENSIONS SHOWN ARE NOMINAL (IN MILLIMETERS), U.N.O.
2. WELD SIZESHALL BE AISC MINIMUM OF 6 mm UNLESS NOTED OTHERWISE.
3. ALL FIELD WELDS SHALL BE INSPECTED PER QUALITY ASSURANCE AND SPECIAL INSPECTIONS.

REFERENCE DRAWINGS

1	93M-BOA-NAT-LOT-04833
2	93M-BOA-NAT-LOT-09170
3	93M-BOA-NAT-LOT-01976
4	93M-BOA-NAT-LOT-20021
5	
6	
7	
8	
9	

6TH OF OCTOBER CITY RAIL TRANSIT MONORAIL

The Authority | Consultant: Hill International | Main Contractor: ORASCOM CONSTRUCTION, BOMBARDIER | Structural Designer: INNOVA TRANSPORTATION

KEY PLAN:

SCALE: AS SHOWN | SHOPDRAWING | DATE: 09/29/2023

REV	DATE	DSG.	CHK.	APP.	AMENDMENTS	STATUS
B	08/29/2023	M.KH	M.KH	DR.M.M	ISSUED FOR INFORMATION	IFI
A	09/21/2022	M.KH	M.KH	DR.M.M	ISSUED FOR INFORMATION	IFI

DRAWING TITLE

6TH OF OCTOBER MONORAIL SERVICE WALKWAYS ZONE(1016) Z16-CHQ036

Project Code	Rubric	Initiator	Lot	Ref	Number	Revision
93M	0476	ACC	60	DEP	DWG16221	B

Tekla structures

Same comments as
93M-0476-ACC-60DEP-DWG-16053-B.

REVIEWED WITH COMMENT
MONORAILS PROJECT

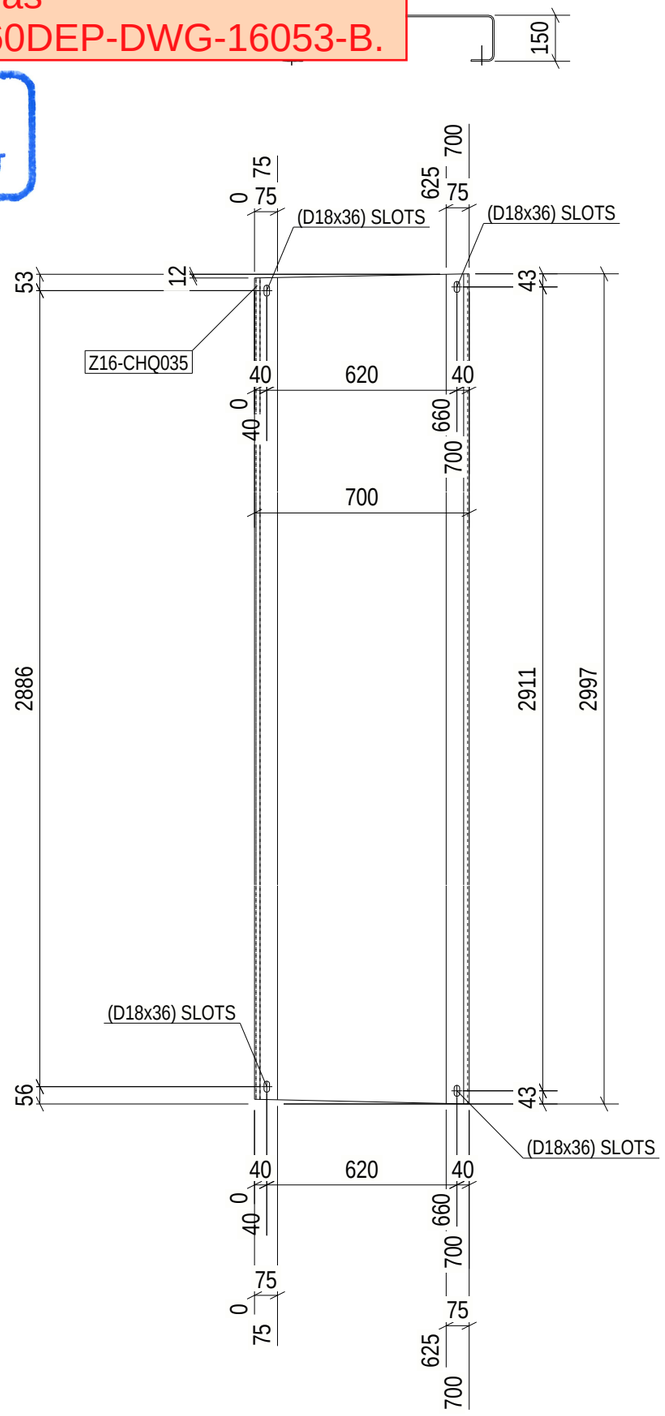

Length & Area & Weight per piece						
Z16-CHQ035	CHQD5*1103.4	S235JR	1	3079.5	6.62	128.7
Mark	Profile	Grade	QTY	Length	Area	Weight

1 REQ'D AS DRAWN MK'D Z16-CHQ035

6 October Monorail
Engineering Unit
Valid For Construction

GENERAL NOTES:

1. THE DIMENSIONS SHOWN ARE NOMINAL (IN MILLIMETERS), U.N.O.
2. WELD SIZESHALL BE AISC MINIMUM OF 6 mm UNLESS NOTED OTHERWISE.
3. ALL FIELD WELDS SHALL BE INSPECTED PER QUALITY ASSURANCE AND SPECIAL INSPECTIONS.

REFERENCE DRAWINGS

1	93M-BOA-NAT-LOT-04833
2	93M-BOA-NAT-LOT-09170
3	93M-BOA-NAT-LOT-01976
4	93M-BOA-NAT-LOT-20021
5	
6	
7	
8	
9	

6TH OF OCTOBER CITY RAIL TRANSIT MONORAIL

The Authority | Consultant: Hill International | Main Contractor: ORASCOM CONSTRUCTION, BOMBARDIER | Structural Designer: INNOVA CONSULTANTS

KEY PLAN:

SCALE	SHOPDRAWING	DATE
AS SHOWN		09/29/2023

REV	DATE	DSG.	CHK.	APP.	AMENDMENTS	STATUS
B	08/29/2023	M.KH	M.KH	DR.M.M	ISSUED FOR INFORMATION	IFI
A	09/21/2022	M.KH	M.KH	DR.M.M	ISSUED FOR INFORMATION	IFI

DRAWING TITLE
6TH OF OCTOBER MONORAIL
SERVICE WALKWAYS
ZONE(1016)
Z16-CHQ035

Project Code	Rubric	Initiator	Lot	Ref	Number	Revision
93	M047	6ACC	60DE	PDWG	1622	B

Tekla structures

Same comments as
93M-0476-ACC-60DEP-DWG-16053-B.

REVIEWED WITH
COMMENT
MONORAILS PROJECT

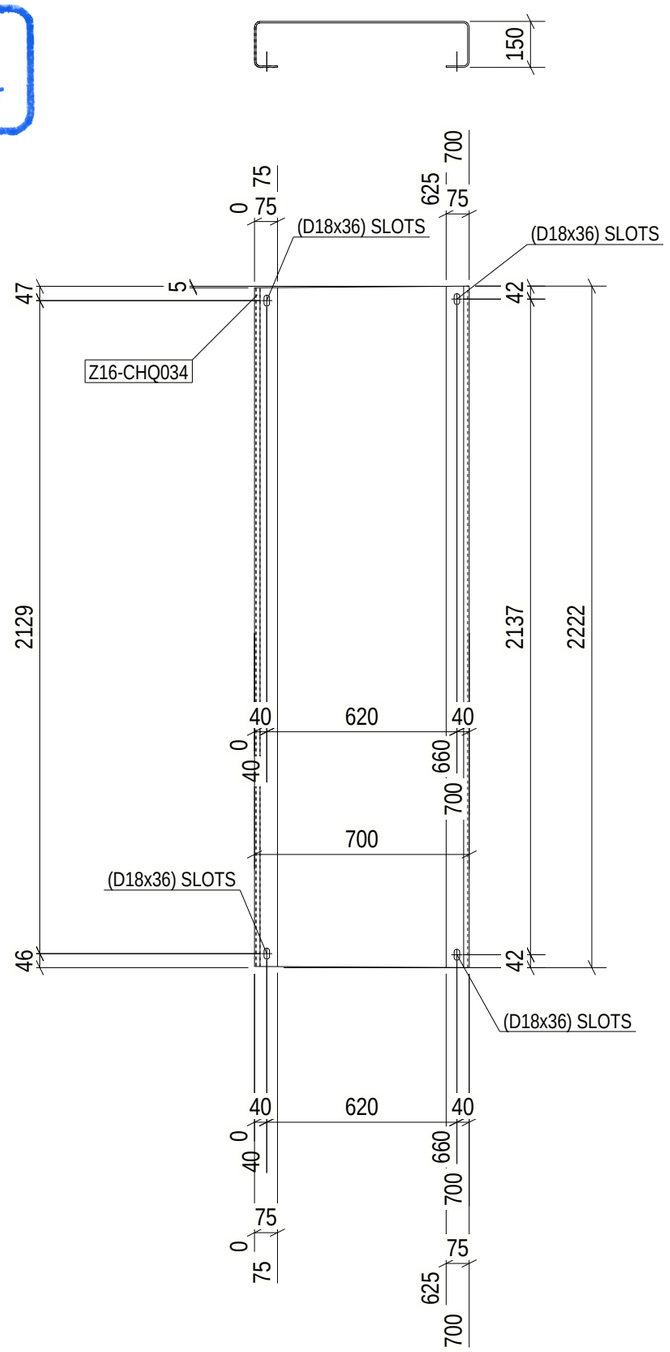

Length & Area & Weight per piece						
Z16-CHQ034	CHQD5*1103.4	S235JR	1	2316.3	4.92	95.6
Mark	Profile	Grade	QTY	Length	Area	Weight

1 REQ'D AS DRAWN MK'D Z16-CHQ034

6 October Monorail
Engineering Unit
Valid For Construction

GENERAL NOTES:

1. THE DIMENSIONS SHOWN ARE NOMINAL (IN MILLIMETERS), U.N.O.
2. WELD SIZESHALL BE AISC MINIMUM OF 6 mm UNLESS NOTED OTHERWISE.
3. ALL FIELD WELDS SHALL BE INSPECTED PER QUALITY ASSURANCE AND SPECIAL INSPECTIONS.

REFERENCE DRAWINGS

1	93M-BOA-NAT-LOT-04833
2	93M-BOA-NAT-LOT-09170
3	93M-BOA-NAT-LOT-01976
4	93M-BOA-NAT-LOT-20021
5	
6	
7	
8	
9	

6TH OF OCTOBER CITY RAIL TRANSIT MONORAIL

The Authority | Consultant: Hill International | Main Contractor: ORASCOM CONSTRUCTION / BOMBARDIER | Structural Designer: INNOVA

KEY PLAN:

SCALE: AS SHOWN | SHOPDRAWING | DATE: 09/29/2023

REV.	DATE	DSG.	CHK.	APP.	AMENDMENTS	STATUS
B	08/29/2023	M.KH	M.KH	DR.M.M	ISSUED FOR INFORMATION	IFI
A	09/21/2022	M.KH	M.KH	DR.M.M	ISSUED FOR INFORMATION	IFI

DRAWING TITLE
6TH OF OCTOBER MONORAIL
SERVICE WALKWAYS
ZONE(1016)
Z16-CHQ034

Project Code	Rubric	Initiator	Lot	Ref	Number	Revision
93M	0476	ACC	60DEP	DWG	16223	B

Tekla structures

Same comments as
93M-0476-ACC-60DEP-DWG-16053-B.

REVIEWED WITH COMMENT
MONORAILS PROJECT

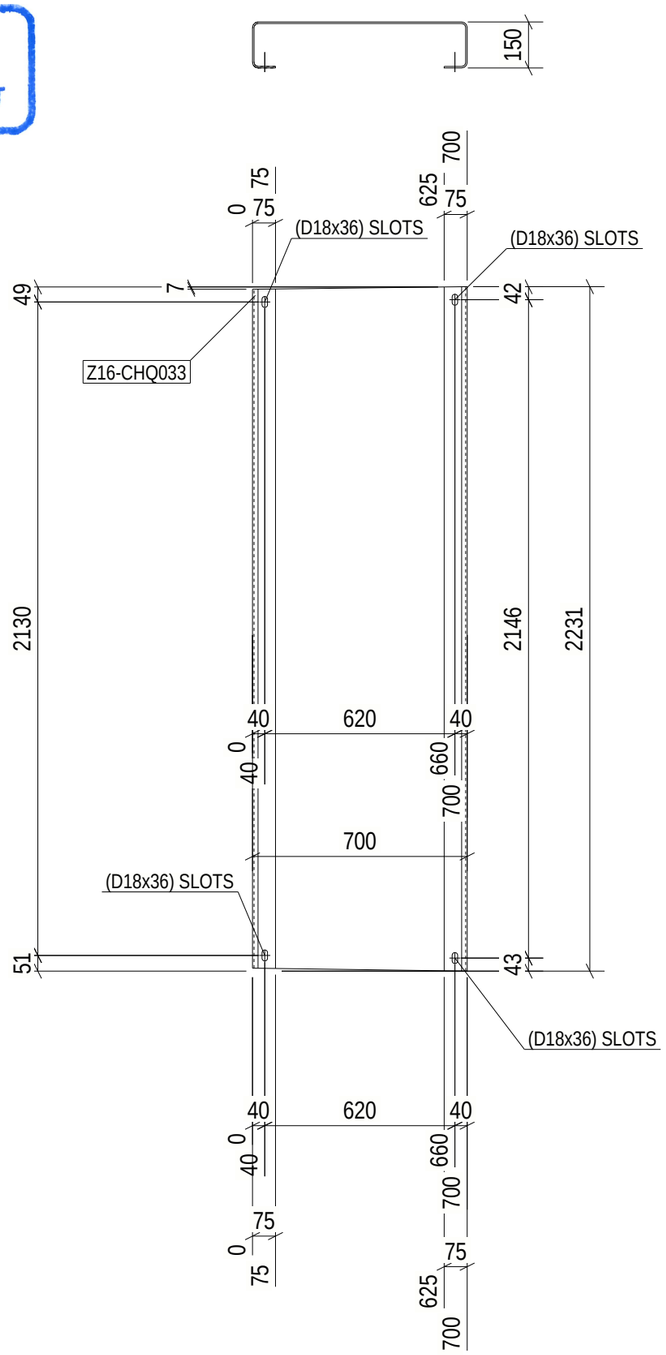

Length & Area & Weight per piece						
Z16-CHQ033	CHQD5*1103.4	S235JR	1	2320.6	4.93	95.9
Mark	Profile	Grade	QTY	Length	Area	Weight

1 REQ'D AS DRAWN MK'D Z16-CHQ033

6 October Monorail
Engineering Unit
Valid For Construction

GENERAL NOTES:

1. THE DIMENSIONS SHOWN ARE NOMINAL (IN MILLIMETERS), U.N.O.
2. WELD SIZESHALL BE AISC MINIMUM OF 6 mm UNLESS NOTED OTHERWISE.
3. ALL FIELD WELDS SHALL BE INSPECTED PER QUALITY ASSURANCE AND SPECIAL INSPECTIONS.

REFERENCE DRAWINGS

1	93M-BOA-NAT-LOT-04833
2	93M-BOA-NAT-LOT-09170
3	93M-BOA-NAT-LOT-01976
4	93M-BOA-NAT-LOT-20021
5	
6	
7	
8	
9	

6TH OF OCTOBER CITY RAIL TRANSIT MONORAIL

The Authority | Consultant: Hill International | Main Contractor: ORASCOM CONSTRUCTION / BOMBARDIER | Structural Designer: INNOVA TRANSPORTATION

KEY PLAN:

SCALE	SHOPDRAWING	DATE
AS SHOWN		09/29/2023

REV.	DATE	DSG.	CHK.	APP.	AMENDMENTS	STATUS
B	08/29/2023	M.KH	M.KH	DR.M.M	ISSUED FOR INFORMATION	IFI
A	09/21/2022	M.KH	M.KH	DR.M.M	ISSUED FOR INFORMATION	IFI

DRAWING TITLE
6TH OF OCTOBER MONORAIL
SERVICE WALKWAYS
ZONE(1016)
Z16-CHQ033

Project Code	Rubric	Initiator	Lot	Ref	Number	Revision
93M	0476	ACC	60DEP	DWG	16224	B

Tekla structures

Same comments as
93M-0476-ACC-60DEP-DWG-16053-B.

REVIEWED WITH COMMENT
MONORAILS PROJECT

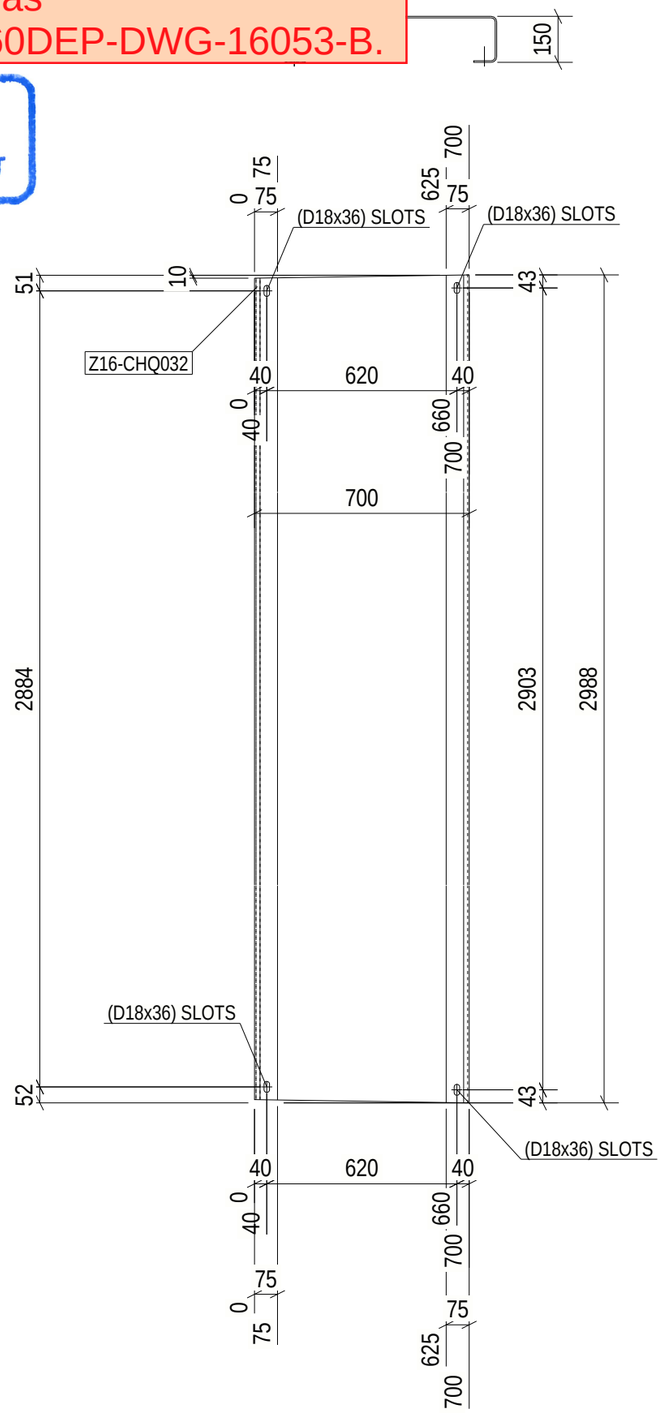

Length & Area & Weight per piece						
Z16-CHQ032	CHQD5*1103.4	S235JR	1	3075.5	6.61	128.4
Mark	Profile	Grade	QTY	Length	Area	Weight

1 REQ'D AS DRAWN MK'D Z16-CHQ032

6 October Monorail
Engineering Unit
Valid For Construction

GENERAL NOTES:

1. THE DIMENSIONS SHOWN ARE NOMINAL (IN MILLIMETERS), U.N.O.
2. WELD SIZESHALL BE AISC MINIMUM OF 6 mm UNLESS NOTED OTHERWISE.
3. ALL FIELD WELDS SHALL BE INSPECTED PER QUALITY ASSURANCE AND SPECIAL INSPECTIONS.

REFERENCE DRAWINGS

1	93M-BOA-NAT-LOT-04833
2	93M-BOA-NAT-LOT-09170
3	93M-BOA-NAT-LOT-01976
4	93M-BOA-NAT-LOT-20021
5	
6	
7	
8	
9	

6TH OF OCTOBER CITY RAIL TRANSIT MONORAIL

The Authority | Consultant: Hill International | Main Contractor: ORASCOM CONSTRUCTION, BOMBARDIER | Structural Designer: INNOVA CONSULTANTS

KEY PLAN:

SCALE	SHOPDRAWING	DATE
AS SHOWN		09/29/2023

REV	DATE	DSG.	CHK.	APP.	AMENDMENTS	STATUS
B	08/29/2023	M.KH	M.KH	DR.M.M	ISSUED FOR INFORMATION	IFI
A	09/21/2022	M.KH	M.KH	DR.M.M	ISSUED FOR INFORMATION	IFI

DRAWING TITLE
6TH OF OCTOBER MONORAIL
SERVICE WALKWAYS
ZONE(1016)
Z16-CHQ032

Project Code	Rubric	Initiator	Lot	Ref	Number	Revision
93	M047	6ACC	60DE	PDWG	16225	B

Tekla structures

Same comments as 93M-0476-ACC-60DEP-DWG-16053-B.

REVIEWED WITH COMMENT
MONORAILS PROJECT

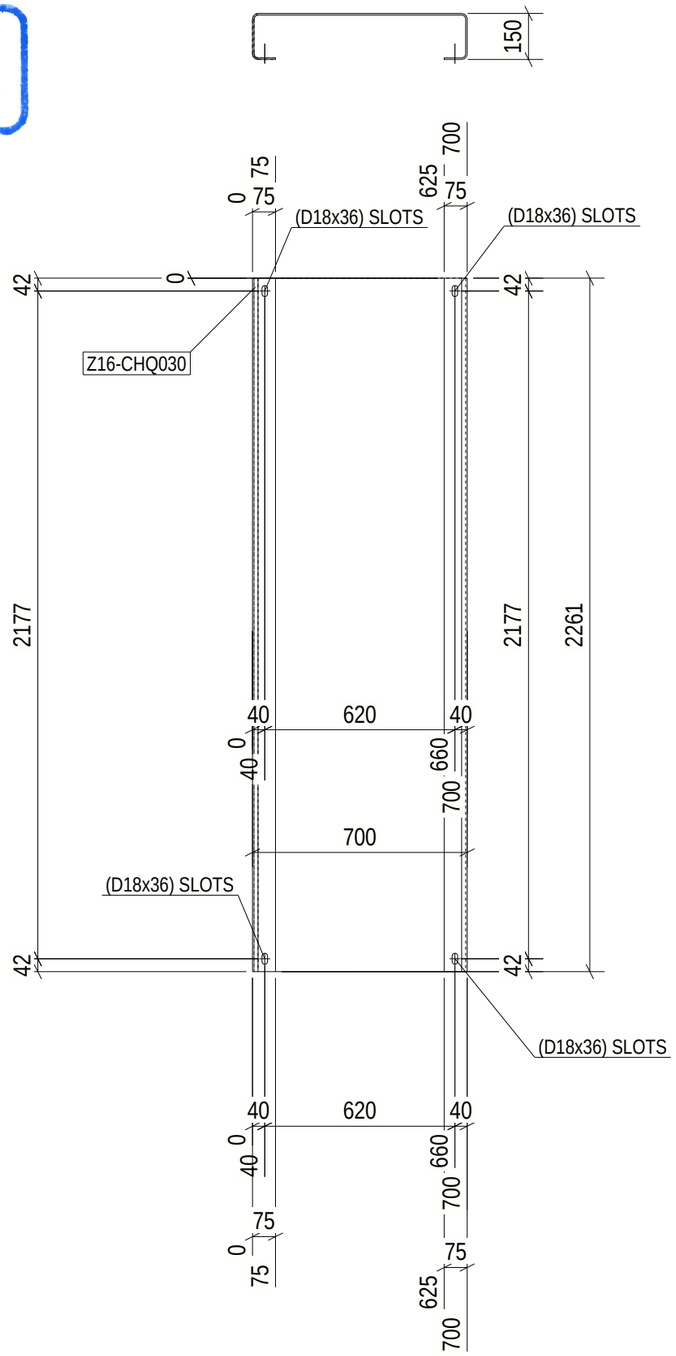

Length & Area & Weight per piece						
Z16-CHQ030	CHQD5*1103.4	S235JR	1	2360.9	5.02	97.5
Mark	Profile	Grade	QTY	Length	Area	Weight

1 REQ'D AS DRAWN MK'D Z16-CHQ030

6 October Monorail
Engineering Unit
Valid For Construction

GENERAL NOTES:

1. THE DIMENSIONS SHOWN ARE NOMINAL (IN MILLIMETERS), U.N.O.
2. WELD SIZESHALL BE AISC MINIMUM OF 6 mm UNLESS NOTED OTHERWISE.
3. ALL FIELD WELDS SHALL BE INSPECTED PER QUALITY ASSURANCE AND SPECIAL INSPECTIONS.

REFERENCE DRAWINGS

1	93M-BOA-NAT-LOT-04833
2	93M-BOA-NAT-LOT-09170
3	93M-BOA-NAT-LOT-01976
4	93M-BOA-NAT-LOT-20021
5	
6	
7	
8	
9	

6TH OF OCTOBER CITY RAIL TRANSIT MONORAIL

The Authority — Hill International Consultant — Main Contractor — Structural Designer

KEY PLAN:

SCALE: AS SHOWN | SHOPDRAWING | DATE: 09/29/2023

REV.	DATE	DSG.	CHK.	APP.	AMENDMENTS	STATUS
B	08/29/2023	M.KH	M.KH	DR.M.M	ISSUED FOR INFORMATION	IFI
A	09/21/2022	M.KH	M.KH	DR.M.M	ISSUED FOR INFORMATION	IFI

DRAWING TITLE
6TH OF OCTOBER MONORAIL
SERVICE WALKWAYS
ZONE(1016)
Z16-CHQ030

Project Code	Rubric	Initiator	Lot	Ref	Number	Revision
93M	0476	ACC	60DEP	DWG	16226	B

Tekla structures

Same comments as 93M-0476-ACC-60DEP-DWG-16053-B.

REVIEWED WITH COMMENT
MONORAILS PROJECT

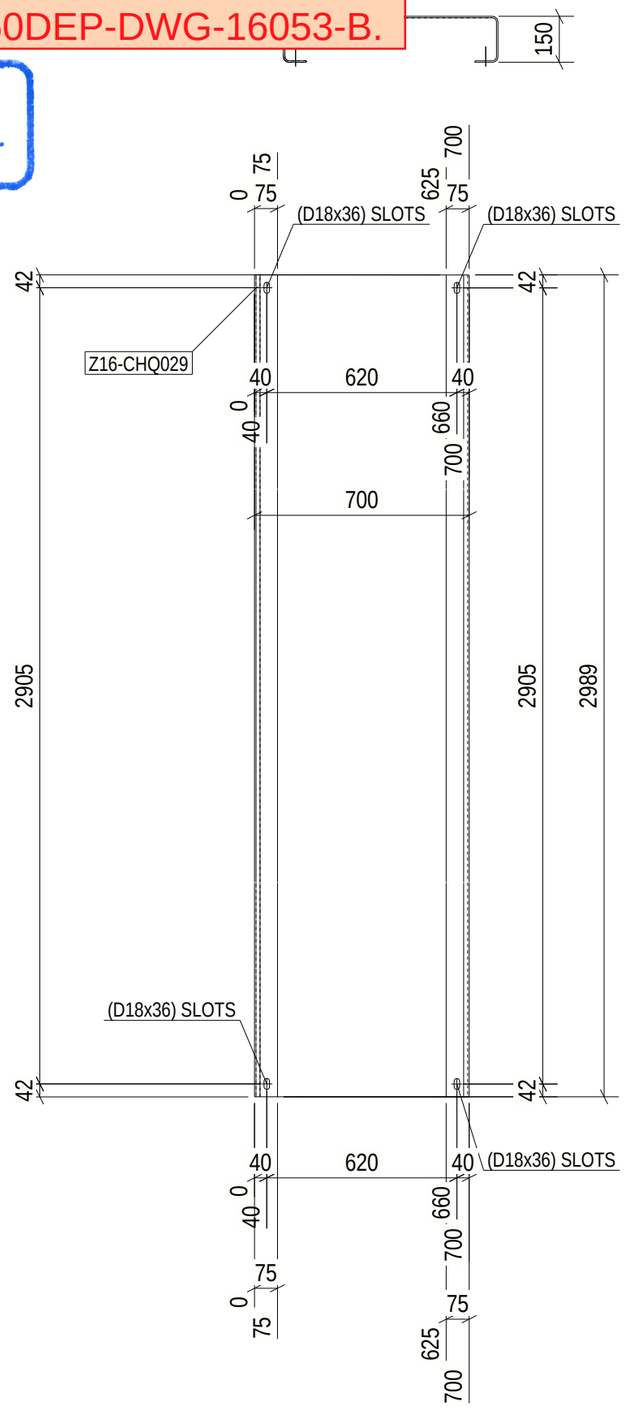

Length & Area & Weight per piece						
Z16-CHQ029	CHQD5*1103.4	S235JR	1	3088.8	6.63	128.9
Mark	Profile	Grade	QTY	Length	Area	Weight

1 REQ'D AS DRAWN MK'D Z16-CHQ029

6 October Monorail
Engineering Unit
Valid For Construction

GENERAL NOTES:

1. THE DIMENSIONS SHOWN ARE NOMINAL (IN MILLIMETERS), U.N.O.
2. WELD SIZESHALL BE AISC MINIMUM OF 6 mm UNLESS NOTED OTHERWISE.
3. ALL FIELD WELDS SHALL BE INSPECTED PER QUALITY ASSURANCE AND SPECIAL INSPECTIONS.

REFERENCE DRAWINGS

1	93M-BOA-NAT-LOT-04833
2	93M-BOA-NAT-LOT-09170
3	93M-BOA-NAT-LOT-01976
4	93M-BOA-NAT-LOT-20021
5	
6	
7	
8	
9	

6TH OF OCTOBER CITY RAIL TRANSIT MONORAIL

The Authority | Consultant: Hill International | Main Contractor: ORASCOM CONSTRUCTION, BOMBARDIER | Structural Designer: INNOVA TRANSPORTATION

KEY PLAN:

SCALE: AS SHOWN | SHOPDRAWING | DATE: 09/29/2023

REV	DATE	DSG.	CHK.	APP.	AMENDMENTS	STATUS
B	08/29/2023	M.KH	M.KH	DR.M.M	ISSUED FOR INFORMATION	IFI
A	09/21/2022	M.KH	M.KH	DR.M.M	ISSUED FOR INFORMATION	IFI

DRAWING TITLE
6TH OF OCTOBER MONORAIL
SERVICE WALKWAYS
ZONE(1016)
Z16-CHQ029

Project Code	Rubric	Initiator	Lot	Ref	Number	Revision
93M	0476	ACC	60DEP	DWG	16227	B

Tekla structures

Same comments as 93M-0476-ACC-60DEP-DWG-16053-B.

REVIEWED WITH COMMENT MONORAILS PROJECT

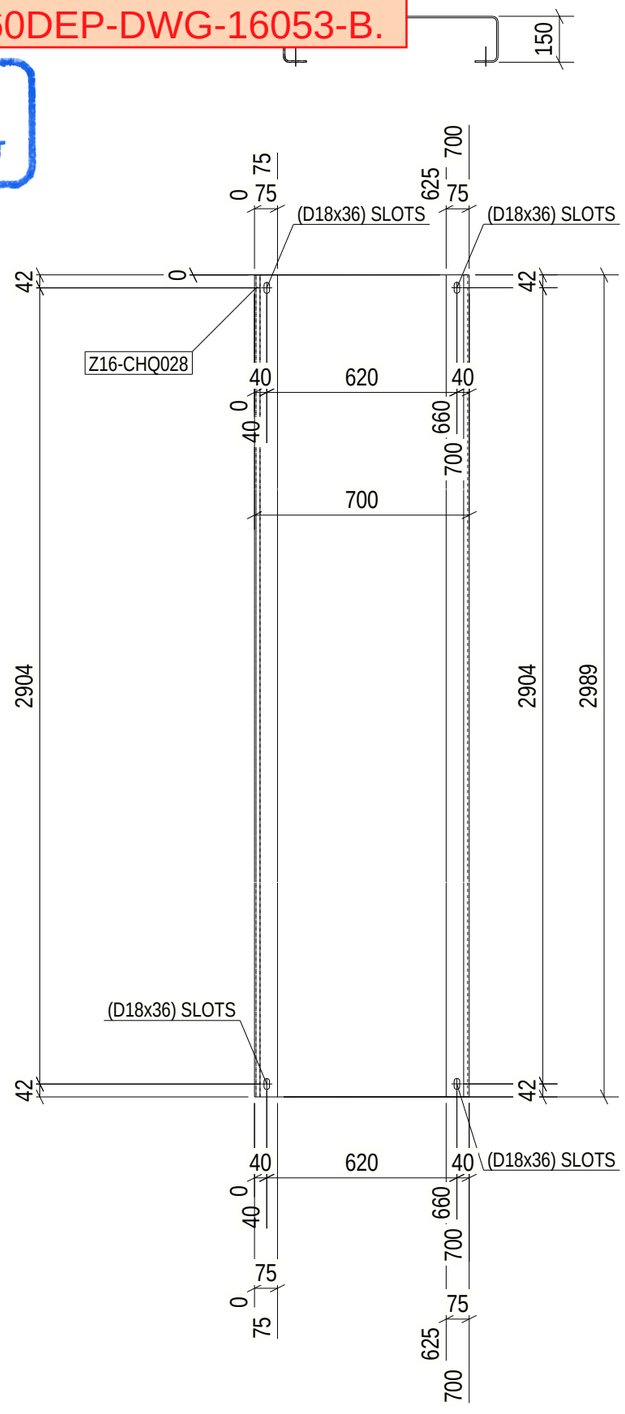

Length & Area & Weight per piece						
Z16-CHQ028	CHQD5*1103.4	S235JR	1	3088.4	6.63	128.9
Mark	Profile	Grade	QTY	Length	Area	Weight

1 REQ'D AS DRAWN MK'D Z16-CHQ028

6 October Monorail Engineering Unit Valid For Construction

GENERAL NOTES:

1. THE DIMENSIONS SHOWN ARE NOMINAL (IN MILLIMETERS), U.N.O.
2. WELD SIZESHALL BE AISC MINIMUM OF 6 mm UNLESS NOTED OTHERWISE.
3. ALL FIELD WELDS SHALL BE INSPECTED PER QUALITY ASSURANCE AND SPECIAL INSPECTIONS.

REFERENCE DRAWINGS

1	93M-BOA-NAT-LOT-04833
2	93M-BOA-NAT-LOT-09170
3	93M-BOA-NAT-LOT-01976
4	93M-BOA-NAT-LOT-20021
5	
6	
7	
8	
9	

6TH OF OCTOBER CITY RAIL TRANSIT MONORAIL

The Authority | Consultant: Hill International | Main Contractor: ORASCOM CONSTRUCTION, BOMBARDIER | Structural Designer: INNOVA TRANSPORTATION

KEY PLAN:

SCALE: AS SHOWN | SHOPDRAWING | DATE: 09/29/2023

REV	DATE	DSG.	CHK.	APP.	AMENDMENTS	STATUS
B	08/29/2023	M.KH	M.KH	DR.M.M	ISSUED FOR INFORMATION	IFI
A	09/21/2022	M.KH	M.KH	DR.M.M	ISSUED FOR INFORMATION	IFI

DRAWING TITLE

6TH OF OCTOBER MONORAIL
SERVICE WALKWAYS
ZONE(1016)
Z16-CHQ028

Project Code	Rubric	Initiator	Lot	Ref	Number	Revision
93M	0476	ACC	60DEP	DWG	16228	B

Tekla structures

Same comments as
93M-0476-ACC-60DEP-DWG-16053-B.

REVIEWED WITH COMMENT
MONORAILS PROJECT

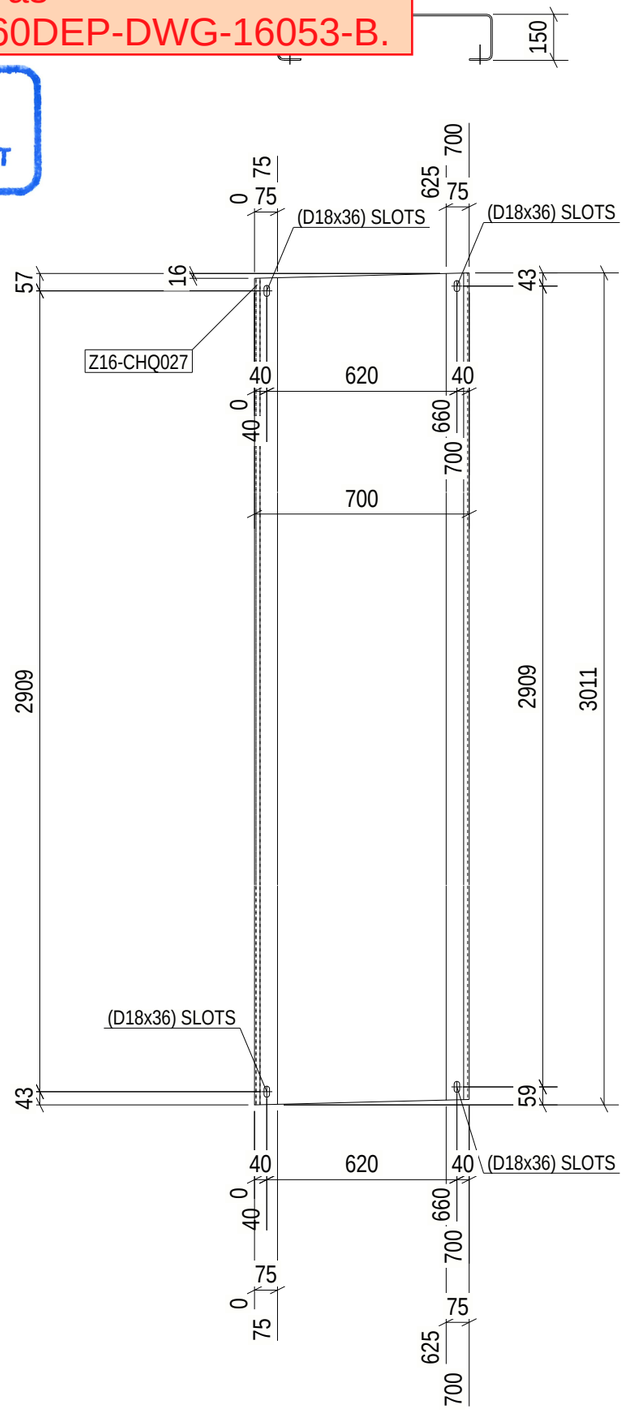

Length & Area & Weight per piece						
Z16-CHQ027	CHQD5*1103.4	S235JR	1	3092.1	6.64	129.1
Mark	Profile	Grade	QTY	Length	Area	Weight

1 REQ'D AS DRAWN MK'D Z16-CHQ027

6 October Monorail
Engineering Unit
Valid For Construction

GENERAL NOTES:

1. THE DIMENSIONS SHOWN ARE NOMINAL (IN MILLIMETERS), U.N.O.
2. WELD SIZESHALL BE AISC MINIMUM OF 6 mm UNLESS NOTED OTHERWISE.
3. ALL FIELD WELDS SHALL BE INSPECTED PER QUALITY ASSURANCE AND SPECIAL INSPECTIONS.

REFERENCE DRAWINGS

1	93M-BOA-NAT-LOT-04833
2	93M-BOA-NAT-LOT-09170
3	93M-BOA-NAT-LOT-01976
4	93M-BOA-NAT-LOT-20021
5	
6	
7	
8	
9	

6TH OF OCTOBER CITY RAIL TRANSIT MONORAIL

The Authority | Consultant: Hill International | Main Contractor: ORASCOM CONSTRUCTION, BOMBARDIER | Structural Designer: INNOVA TRANSPORTATION

KEY PLAN:

SCALE	SHOPDRAWING	DATE
AS SHOWN		09/29/2023

REV	DATE	DSG.	CHK.	APP.	AMENDMENTS	STATUS
B	08/29/2023	M.KH	M.KH	DR.M.M	ISSUED FOR INFORMATION	IFI
A	09/21/2022	M.KH	M.KH	DR.M.M	ISSUED FOR INFORMATION	IFI

DRAWING TITLE
6TH OF OCTOBER MONORAIL
SERVICE WALKWAYS
ZONE(1016)
Z16-CHQ027

Project Code	Rubric	Initiator	Lot	Ref	Number	Revision
93M	0476	ACC	60DEP	DWG	16229	B

Tekla structures

Same comments as
93M-0476-ACC-60DEP-DWG-16053-B.

REVIEWED WITH COMMENT
MONORAILS PROJECT

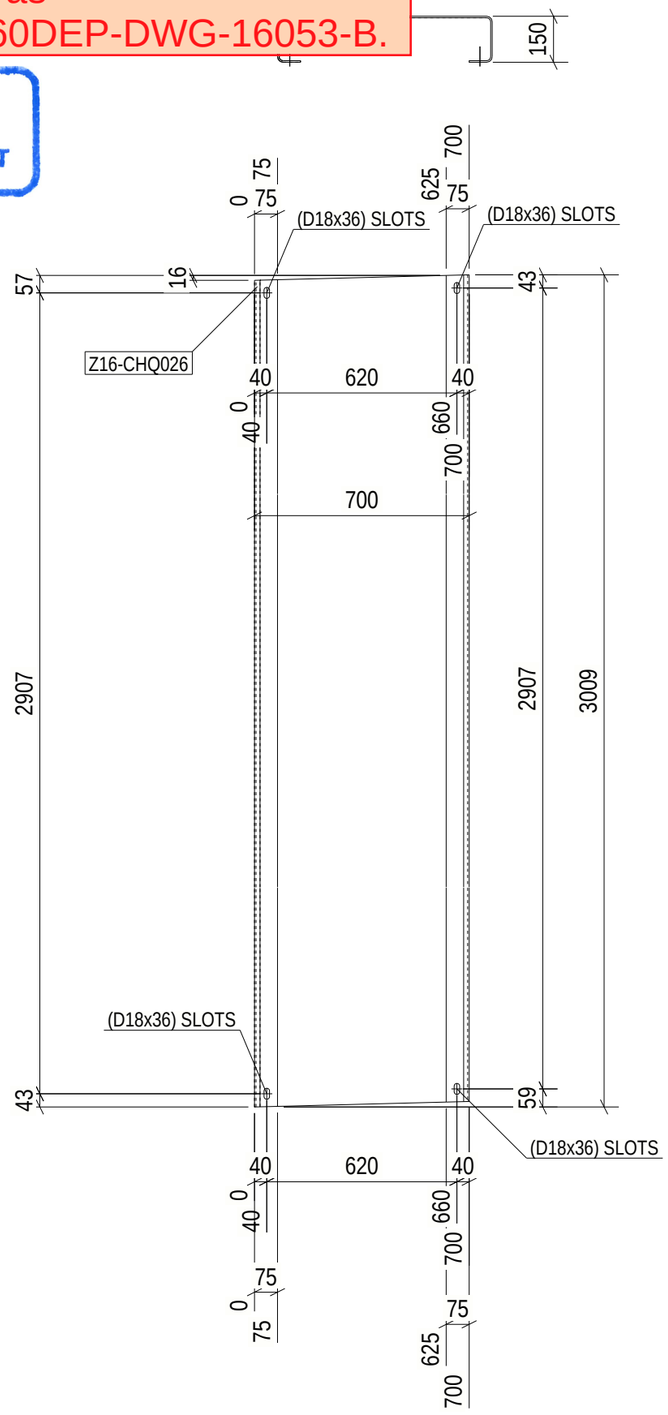

Length & Area & Weight per piece						
Z16-CHQ026	CHQD5*1103.4	S235JR	1	3090.0	6.63	129.0
Mark	Profile	Grade	QTY	Length	Area	Weight

1 REQ'D AS DRAWN MK'D Z16-CHQ026

6 October Monorail
Engineering Unit
Valid For Construction

GENERAL NOTES:

1. THE DIMENSIONS SHOWN ARE NOMINAL (IN MILLIMETERS), U.N.O.
2. WELD SIZESHALL BE AISC MINIMUM OF 6 mm UNLESS NOTED OTHERWISE.
3. ALL FIELD WELDS SHALL BE INSPECTED PER QUALITY ASSURANCE AND SPECIAL INSPECTIONS.

REFERENCE DRAWINGS

1	93M-BOA-NAT-LOT-04833
2	93M-BOA-NAT-LOT-09170
3	93M-BOA-NAT-LOT-01976
4	93M-BOA-NAT-LOT-20021
5	
6	
7	
8	
9	

6TH OF OCTOBER CITY RAIL TRANSIT MONORAIL

The Authority | Consultant: Hill International | Main Contractor: Orascom Construction, Bombardier | Structural Designer: Innova Engineering Solutions

KEY PLAN:

SCALE	SHOPDRAWING	DATE
AS SHOWN		09/29/2023

REV	DATE	DSG.	CHK.	APP.	AMENDMENTS	STATUS
B	08/29/2023	M.KH	M.KH	DR.M.M	ISSUED FOR INFORMATION	IFI
A	09/21/2022	M.KH	M.KH	DR.M.M	ISSUED FOR INFORMATION	IFI

DRAWING TITLE
6TH OF OCTOBER MONORAIL
SERVICE WALKWAYS
ZONE(1016)
Z16-CHQ026

Project Code	Rubric	Initiator	Lot	Ref	Number	Revision
93	M047	6ACC	60DE	PDWG	1623	B

Tekla structures

Same comments as
93M-0476-ACC-60DEP-DWG-16053-B.

REVIEWED WITH COMMENT
MONORAILS PROJECT

Length & Area & Weight per piece						
Z16-CHQ025	CHQD5*1103.4	S235JR	2	1595.1	3.33	64.6
Mark	Profile	Grade	QTY	Length	Area	Weight

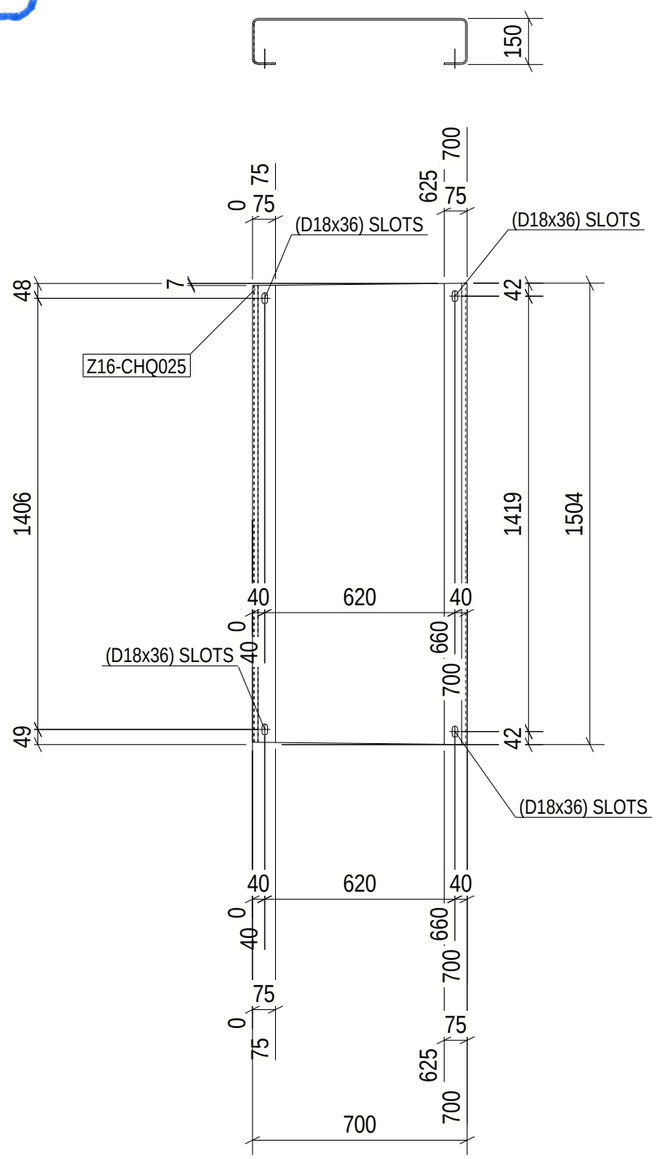

2 REQ'D AS DRAWN MK'D Z16-CHQ025

6 October Monorail
Engineering Unit
Valid For Construction

GENERAL NOTES:

1. THE DIMENSIONS SHOWN ARE NOMINAL (IN MILLIMETERS), U.N.O.
2. WELD SIZESHALL BE AISC MINIMUM OF 6 mm UNLESS NOTED OTHERWISE.
3. ALL FIELD WELDS SHALL BE INSPECTED PER QUALITY ASSURANCE AND SPECIAL INSPECTIONS.

REFERENCE DRAWINGS

1	93M-BOA-NAT-LOT-04833
2	93M-BOA-NAT-LOT-09170
3	93M-BOA-NAT-LOT-01976
4	93M-BOA-NAT-LOT-20021
5	
6	
7	
8	
9	

6TH OF OCTOBER CITY RAIL TRANSIT MONORAIL

The Authority | Consultant: Hill International | Main Contractor: ORASCOM CONSTRUCTION / BOMBARDIER | Structural Designer: INNOVA

KEY PLAN:

SCALE	SHOPDRAWING	DATE
AS SHOWN		08/29/2023

REV	DATE	DSG.	CHK.	APP.	AMENDMENTS	STATUS
B	08/29/2023	M.KH	M.KH	DR.M.M	ISSUED FOR INFORMATION	IFI
A	09/21/2022	M.KH	M.KH	DR.M.M	ISSUED FOR INFORMATION	IFI

DRAWING TITLE
6TH OF OCTOBER MONORAIL
SERVICE WALKWAYS
ZONE(1016)
Z16-CHQ025

Project Code	Rubric	Initiator	Lot	Ref	Number	Revision
93	M047	6ACC	60DEP	DWG	16231	B

Tekla structures

Same comments as 93M-0476-ACC-60DEP-DWG-16053-B.

REVIEWED WITH COMMENT
MONORAILS PROJECT

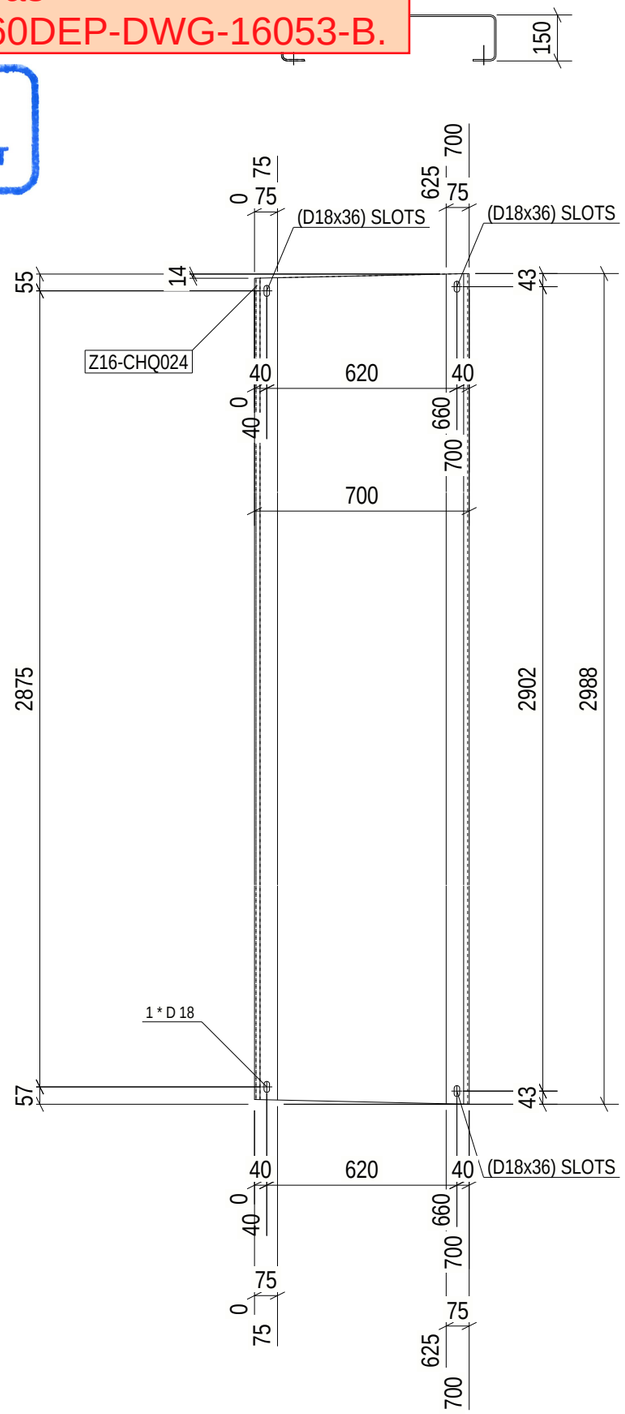

Length & Area & Weight per piece						
Z16-CHQ024	CHQD5*1103.4	S235JR	3	3069.0	6.59	128.2
Mark	Profile	Grade	QTY	Length	Area	Weight

3 REQ'D AS DRAWN MK'D Z16-CHQ024

6 October Monorail
Engineering Unit
Valid For Construction

GENERAL NOTES:

1. THE DIMENSIONS SHOWN ARE NOMINAL (IN MILLIMETERS), U.N.O.
2. WELD SIZESHALL BE AISC MINIMUM OF 6 mm UNLESS NOTED OTHERWISE.
3. ALL FIELD WELDS SHALL BE INSPECTED PER QUALITY ASSURANCE AND SPECIAL INSPECTIONS.

REFERENCE DRAWINGS

1	93M-BOA-NAT-LOT-04833
2	93M-BOA-NAT-LOT-09170
3	93M-BOA-NAT-LOT-01976
4	93M-BOA-NAT-LOT-20021
5	
6	
7	
8	
9	

6TH OF OCTOBER CITY RAIL TRANSIT MONORAIL

The Authority | Consultant: Hill International | Main Contractor: Orascom Construction / Bombardier | Structural Designer: Innova Engineering Solutions

KEY PLAN:

SCALE	SHOPDRAWING	DATE
AS SHOWN		09/29/2023

REV	DATE	DSG.	CHK.	APP.	AMENDMENTS	STATUS
B	08/29/2023	M.KH	M.KH	DR.M.M	ISSUED FOR INFORMATION	IFI
A	09/21/2022	M.KH	M.KH	DR.M.M	ISSUED FOR INFORMATION	IFI

DRAWING TITLE
6TH OF OCTOBER MONORAIL
SERVICE WALKWAYS
ZONE(1016)
Z16-CHQ024

Project Code	Rubric	Initiator	Lot	Ref	Number	Revision
93	M047	6ACC	60DE	PDWG	16232	B

Tekla structures

Same comments as
93M-0476-ACC-60DEP-DWG-16053-B.

REVIEWED WITH COMMENT
MONORAILS PROJECT

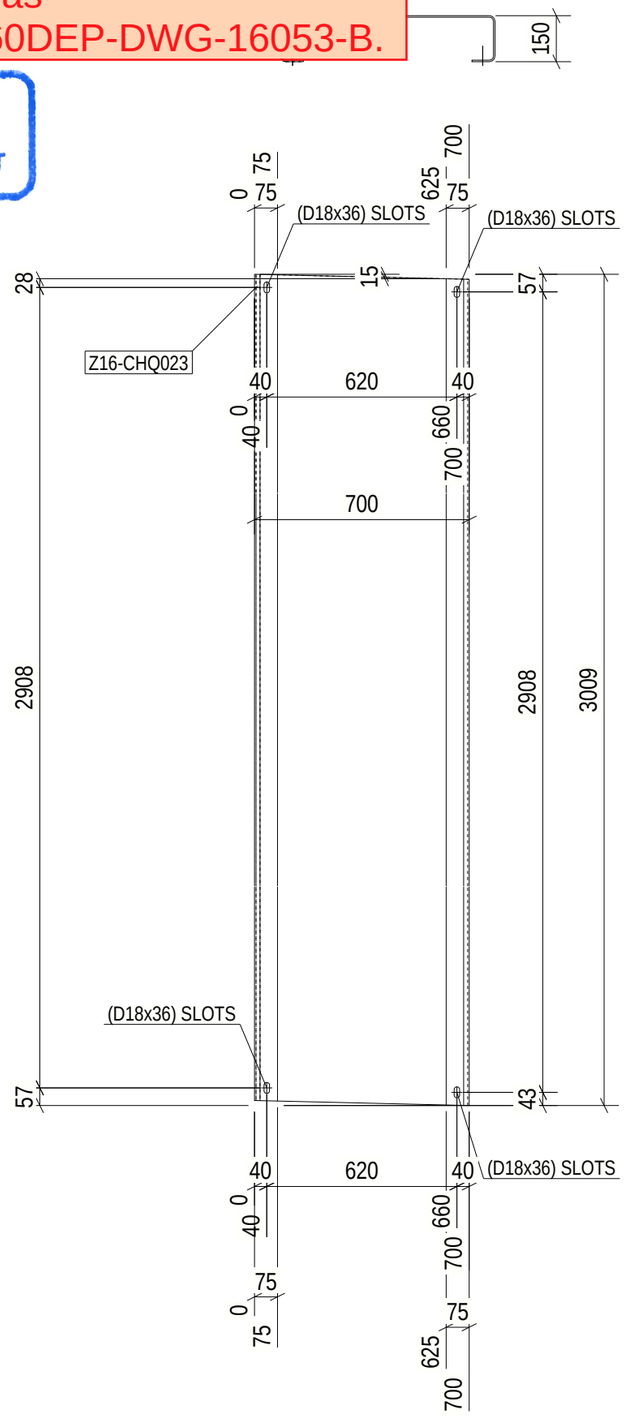

Length & Area & Weight per piece						
Z16-CHQ023	CHQD5*1103.4	S235JR	1	3091.3	6.64	129.1
Mark	Profile	Grade	QTY	Length	Area	Weight

1 REQ'D AS DRAWN MK'D Z16-CHQ023

6 October Monorail
Engineering Unit
Valid For Construction

GENERAL NOTES:

1. THE DIMENSIONS SHOWN ARE NOMINAL (IN MILLIMETERS), U.N.O.
2. WELD SIZESHALL BE AISC MINIMUM OF 6 mm UNLESS NOTED OTHERWISE.
3. ALL FIELD WELDS SHALL BE INSPECTED PER QUALITY ASSURANCE AND SPECIAL INSPECTIONS.

REFERENCE DRAWINGS

1	93M-BOA-NAT-LOT-04833
2	93M-BOA-NAT-LOT-09170
3	93M-BOA-NAT-LOT-01976
4	93M-BOA-NAT-LOT-20021
5	
6	
7	
8	
9	

6TH OF OCTOBER CITY RAIL TRANSIT MONORAIL

The Authority | Consultant: Hill International | Main Contractor: Orascom Construction, Bombardier | Structural Designer: Innova Engineering Solutions

KEY PLAN:

SCALE	SHOPDRAWING	DATE
AS SHOWN		09/29/2023

REV	DATE	DSG.	CHK.	APP.	AMENDMENTS	STATUS
B	08/29/2023	M.KH	M.KH	DR.M.M	ISSUED FOR INFORMATION	IFI
A	09/21/2022	M.KH	M.KH	DR.M.M	ISSUED FOR INFORMATION	IFI

DRAWING TITLE
6TH OF OCTOBER MONORAIL
SERVICE WALKWAYS
ZONE(1016)
Z16-CHQ023

Project Code	Rubric	Initiator	Lot	Ref	Number	Revision
93	M047	6ACC	60DE	PDWG	1623	B

Tekla structures

Same comments as
93M-0476-ACC-60DEP-DWG-16053-B.

REVIEWED WITH COMMENT
MONORAILS PROJECT

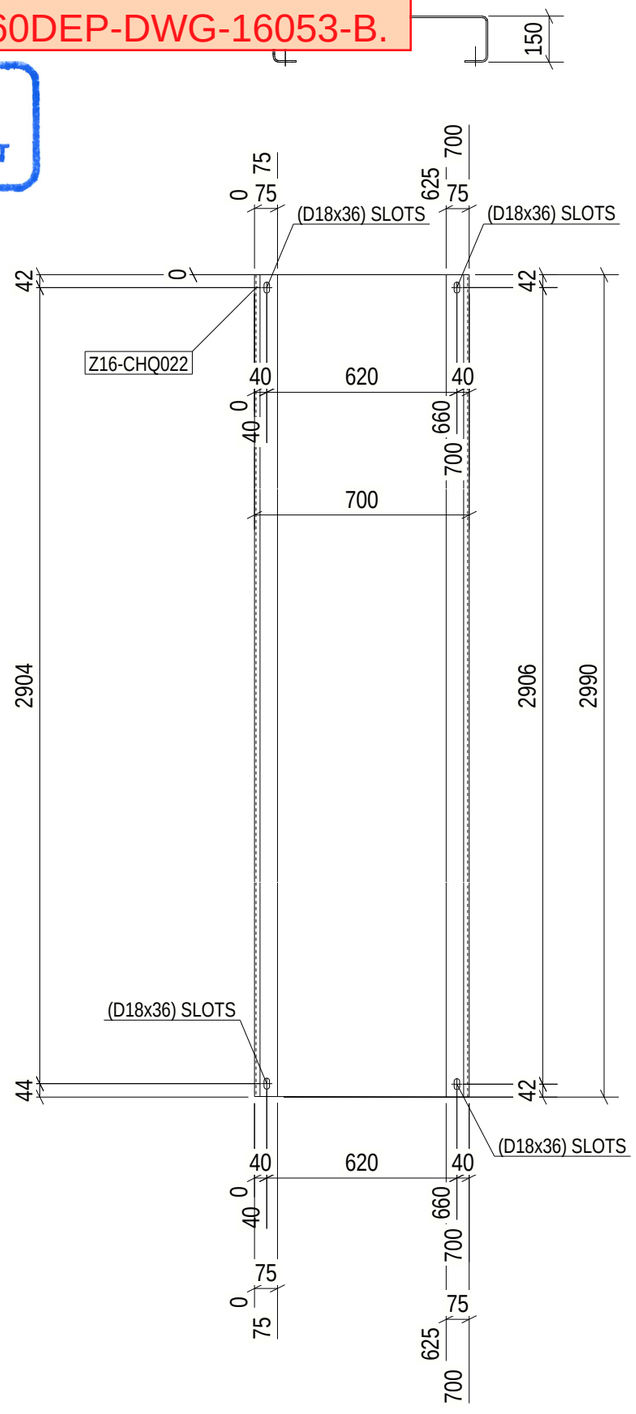

Length & Area & Weight per piece						
Z16-CHQ022	CHQD5*1103.4	S235JR	1	3088.5	6.63	128.9
Mark	Profile	Grade	QTY	Length	Area	Weight

1 REQ'D AS DRAWN MK'D Z16-CHQ022

6 October Monorail
Engineering Unit
Valid For Construction

GENERAL NOTES:

1. THE DIMENSIONS SHOWN ARE NOMINAL (IN MILLIMETERS), U.N.O.
2. WELD SIZESHALL BE AISC MINIMUM OF 6 mm UNLESS NOTED OTHERWISE.
3. ALL FIELD WELDS SHALL BE INSPECTED PER QUALITY ASSURANCE AND SPECIAL INSPECTIONS.

REFERENCE DRAWINGS

1	93M-BOA-NAT-LOT-04833
2	93M-BOA-NAT-LOT-09170
3	93M-BOA-NAT-LOT-01976
4	93M-BOA-NAT-LOT-20021
5	
6	
7	
8	
9	

6TH OF OCTOBER CITY RAIL TRANSIT MONORAIL

The Authority | Consultant: Hill International | Main Contractor: ORASCOM CONSTRUCTION, BOMBARDIER | Structural Designer: INNOVA TRANSPORTATION

KEY PLAN:

SCALE: AS SHOWN | SHOPDRAWING | DATE: 09/29/2023

REV	DATE	DSG.	CHK.	APP.	AMENDMENTS	STATUS
B	08/29/2023	M.KH	M.KH	DR.M.M	ISSUED FOR INFORMATION	IFI
A	09/21/2022	M.KH	M.KH	DR.M.M	ISSUED FOR INFORMATION	IFI

DRAWING TITLE
6TH OF OCTOBER MONORAIL
SERVICE WALKWAYS
ZONE(1016)
Z16-CHQ022

Project Code	Rubric	Initiator	Lot	Ref	Number	Revision
93M	0476	ACC	60DEP	DWG	16234	B

Tekla structures

Same comments as
93M-0476-ACC-60DEP-DWG-16053-B.

REVIEWED WITH COMMENT
MONORAILS PROJECT

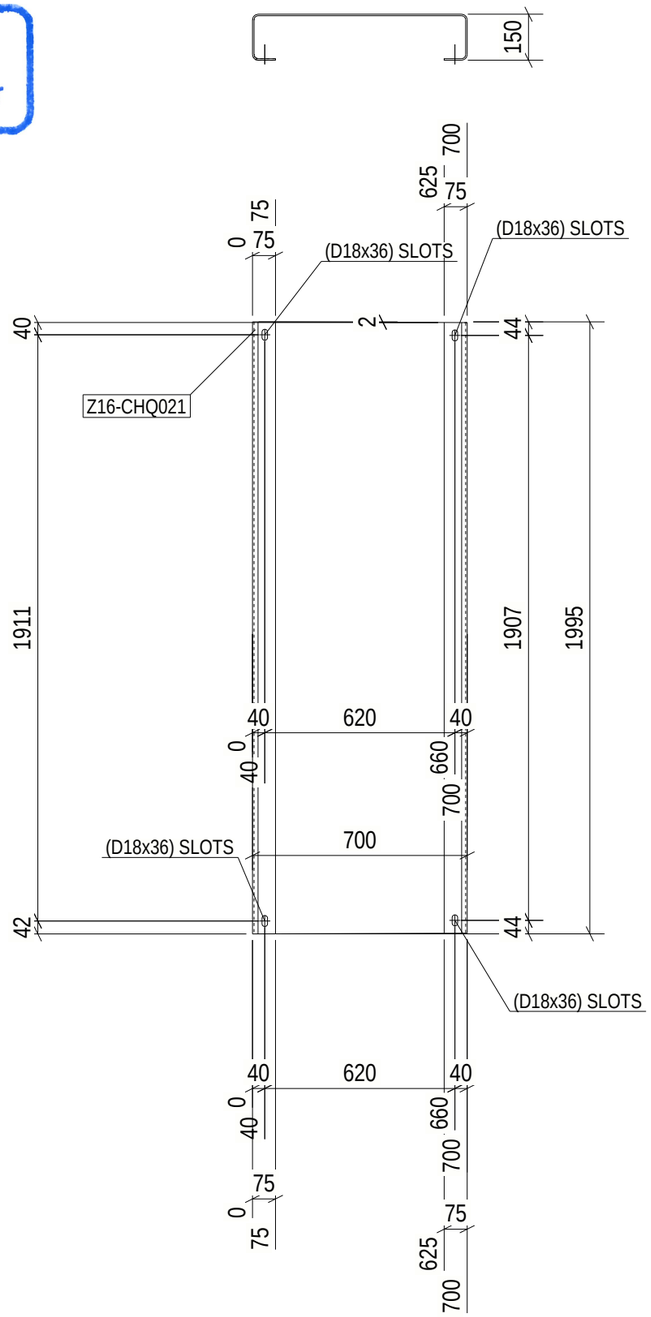

Length & Area & Weight per piece						
Z16-CHQ021	CHQD5*1103.4	S235JR	1	2093.5	4.42	86.0
Mark	Profile	Grade	QTY	Length	Area	Weight

1 REQ'D AS DRAWN MK'D Z16-CHQ021

6 October Monorail
Engineering Unit
Valid For Construction

GENERAL NOTES:

1. THE DIMENSIONS SHOWN ARE NOMINAL (IN MILLIMETERS), U.N.O.
2. WELD SIZESHALL BE AISC MINIMUM OF 6 mm UNLESS NOTED OTHERWISE.
3. ALL FIELD WELDS SHALL BE INSPECTED PER QUALITY ASSURANCE AND SPECIAL INSPECTIONS.

REFERENCE DRAWINGS

1	93M-BOA-NAT-LOT-04833
2	93M-BOA-NAT-LOT-09170
3	93M-BOA-NAT-LOT-01976
4	93M-BOA-NAT-LOT-20021
5	
6	
7	
8	
9	

6TH OF OCTOBER CITY RAIL TRANSIT MONORAIL

The Authority | Consultant: Hill International | Main Contractor: ORASCOM CONSTRUCTION, BOMBARDIER | Structural Designer: INNOVA TRANSPORTATION

KEY PLAN:

SCALE: AS SHOWN | SHOPDRAWING | DATE: 09/29/2023

REV	DATE	DSG.	CHK.	APP.	AMENDMENTS	STATUS
B	08/29/2023	M.KH	M.KH	DR.M.M	ISSUED FOR INFORMATION	IFI
A	09/21/2022	M.KH	M.KH	DR.M.M	ISSUED FOR INFORMATION	IFI

DRAWING TITLE
6TH OF OCTOBER MONORAIL
SERVICE WALKWAYS
ZONE(1016)
Z16-CHQ021

Project Code	Rubric	Initiator	Lot	Ref	Number	Revision
93M	0476	ACC	60DEP	DWG	16235	B

Tekla structures

Same comments as
93M-0476-ACC-60DEP-DWG-16053-B.

REVIEWED WITH COMMENT
MONORAILS PROJECT

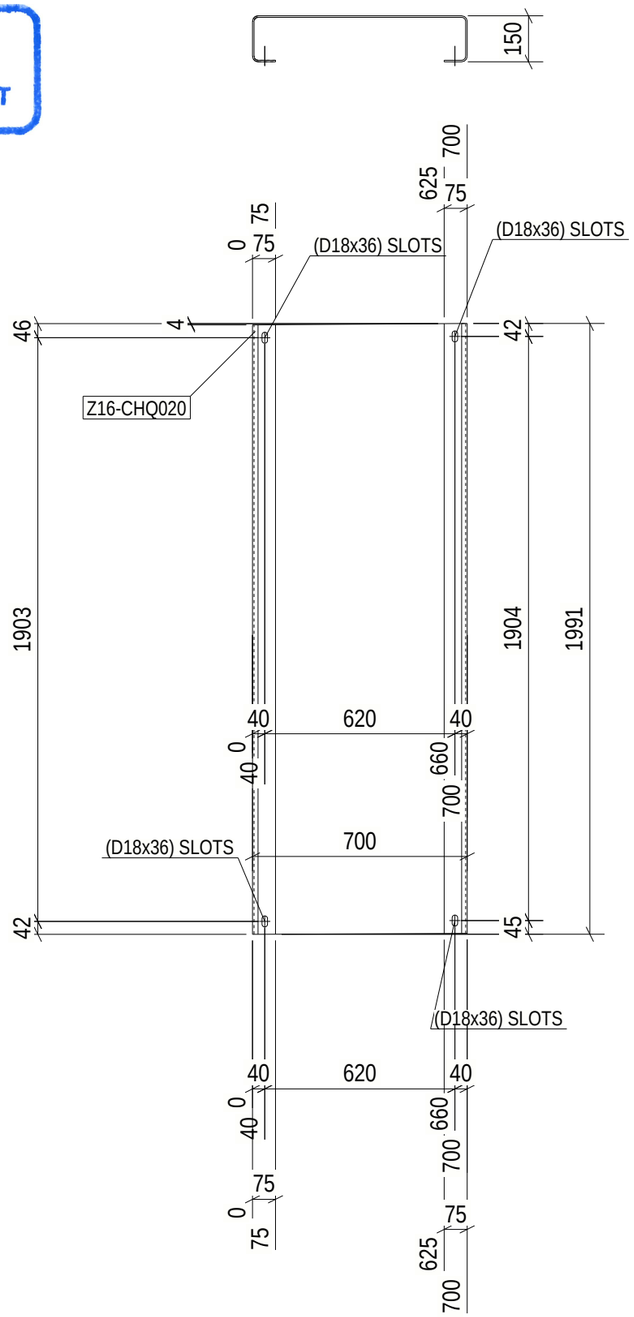

Length & Area & Weight per piece						
Z16-CHQ020	CHQD5*1103.4	S235JR	1	2087.4	4.41	85.7
Mark	Profile	Grade	QTY	Length	Area	Weight

1 REQ'D AS DRAWN MK'D Z16-CHQ020

6 October Monorail
Engineering Unit
Valid For Construction

GENERAL NOTES:

1. THE DIMENSIONS SHOWN ARE NOMINAL (IN MILLIMETERS), U.N.O.
2. WELD SIZESHALL BE AISC MINIMUM OF 6 mm UNLESS NOTED OTHERWISE.
3. ALL FIELD WELDS SHALL BE INSPECTED PER QUALITY ASSURANCE AND SPECIAL INSPECTIONS.

REFERENCE DRAWINGS

1	93M-BOA-NAT-LOT-04833
2	93M-BOA-NAT-LOT-09170
3	93M-BOA-NAT-LOT-01976
4	93M-BOA-NAT-LOT-20021
5	
6	
7	
8	
9	

6TH OF OCTOBER CITY RAIL TRANSIT MONORAIL

The Authority | Consultant: Hill International | Main Contractor: ORASCOM CONSTRUCTION, BOMBARDIER | Structural Designer: INNOVA TRANSPORTATION

KEY PLAN:

SCALE	SHOPDRAWING	DATE
AS SHOWN		09/29/2023

REV.	DATE	DSG.	CHK.	APP.	AMENDMENTS	STATUS
B	08/29/2023	M.KH	M.KH	DR.M.M	ISSUED FOR INFORMATION	IFI
A	09/21/2022	M.KH	M.KH	DR.M.M	ISSUED FOR INFORMATION	IFI

DRAWING TITLE

6TH OF OCTOBER MONORAIL
SERVICE WALKWAYS
ZONE(1016)
Z16-CHQ020

Project Code	Rubric	Initiator	Lot	Ref	Number	Revision
93M	0476	ACC	60DEP	DWG	16236	B

Tekla structures

Same comments as 93M-0476-ACC-60DEP-DWG-16053-B.

REVIEWED WITH COMMENT
MONORAILS PROJECT

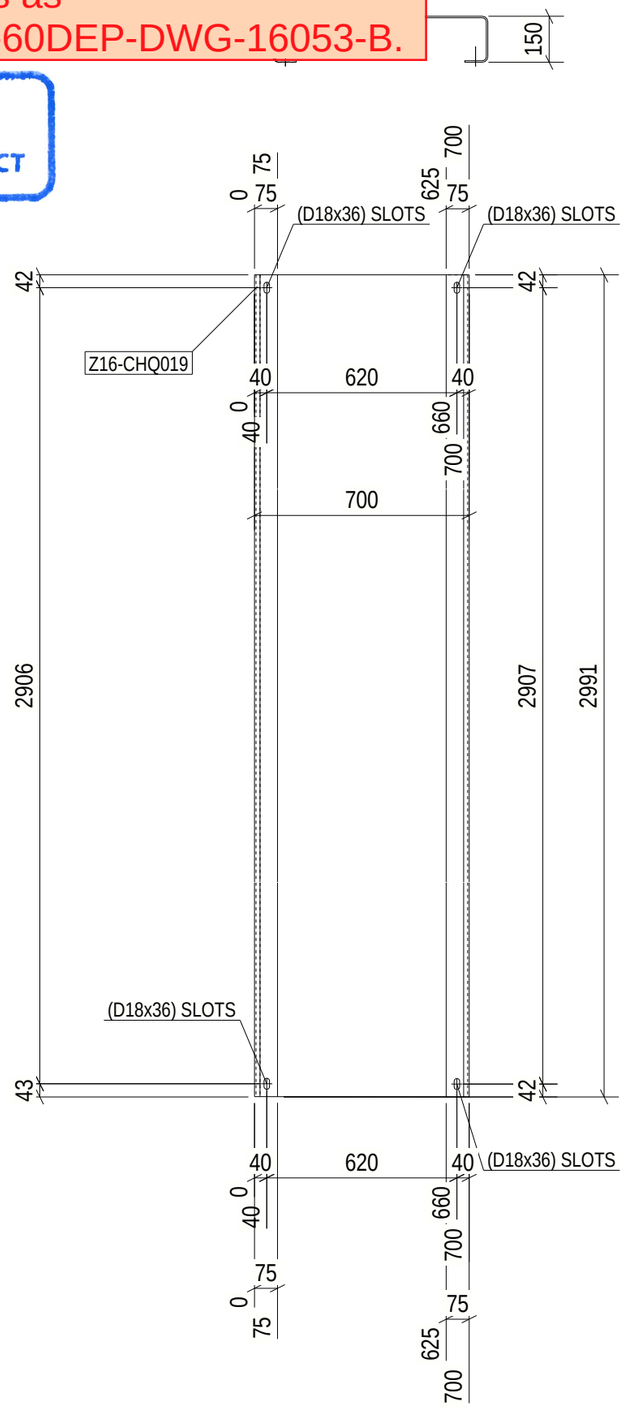

Length & Area & Weight per piece						
Z16-CHQ019	CHQD5*1103.4	S235JR	1	3090.6	6.63	129.0
Mark	Profile	Grade	QTY	Length	Area	Weight

1 REQ'D AS DRAWN MK'D Z16-CHQ019

6 October Monorail
Engineering Unit
Valid For Construction

GENERAL NOTES:

1. THE DIMENSIONS SHOWN ARE NOMINAL (IN MILLIMETERS), U.N.O.
2. WELD SIZESHALL BE AISC MINIMUM OF 6 mm UNLESS NOTED OTHERWISE.
3. ALL FIELD WELDS SHALL BE INSPECTED PER QUALITY ASSURANCE AND SPECIAL INSPECTIONS.

REFERENCE DRAWINGS

1	93M-BOA-NAT-LOT-04833
2	93M-BOA-NAT-LOT-09170
3	93M-BOA-NAT-LOT-01976
4	93M-BOA-NAT-LOT-20021
5	
6	
7	
8	
9	

6TH OF OCTOBER CITY RAIL TRANSIT MONORAIL

The Authority | Consultant: Hill International | Main Contractor: ORASCOM CONSTRUCTION, BOMBARDIER | Structural Designer: INNOVA TRANSPORTATION

KEY PLAN:

SCALE: AS SHOWN | SHOPDRAWING | DATE: 09/29/2023

REV	DATE	DSG.	CHK.	APP.	AMENDMENTS	STATUS
B	08/29/2023	M.KH	M.KH	DR.M.M	ISSUED FOR INFORMATION	IFI
A	09/21/2022	M.KH	M.KH	DR.M.M	ISSUED FOR INFORMATION	IFI

DRAWING TITLE
6TH OF OCTOBER MONORAIL
SERVICE WALKWAYS
ZONE(1016)
Z16-CHQ019

Project Code	Rubric	Initiator	Lot	Ref	Number	Revision
93M	0476	ACC	60DEP	DWG	16237	B

Tekla structures

Same comments as
93M-0476-ACC-60DEP-DWG-16053-B.

REVIEWED WITH COMMENT
MONORAILS PROJECT

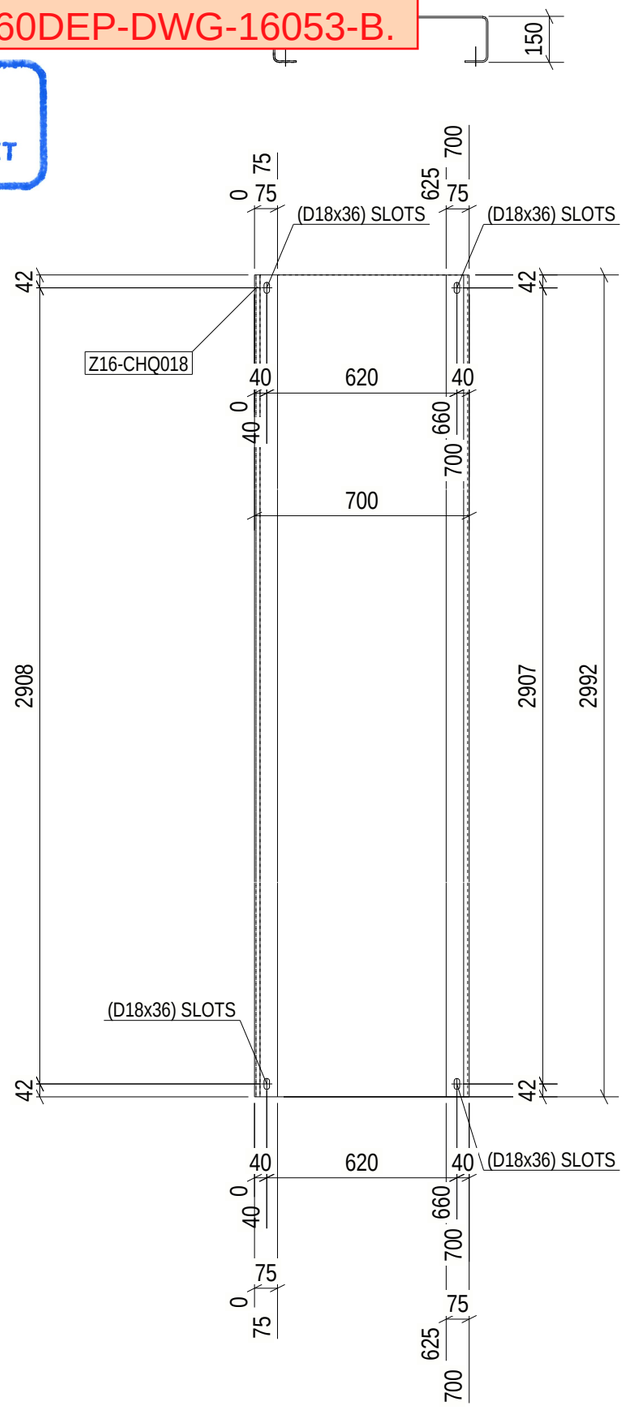

Length & Area & Weight per piece						
Z16-CHQ018	CHQD5*1103.4	S235JR	1	3091.5	6.64	129.0
Mark	Profile	Grade	QTY	Length	Area	Weight

1 REQ'D AS DRAWN MK'D Z16-CHQ018

6 October Monorail
Engineering Unit
Valid For Construction

GENERAL NOTES:

1. THE DIMENSIONS SHOWN ARE NOMINAL (IN MILLIMETERS), U.N.O.
2. WELD SIZESHALL BE AISC MINIMUM OF 6 mm UNLESS NOTED OTHERWISE.
3. ALL FIELD WELDS SHALL BE INSPECTED PER QUALITY ASSURANCE AND SPECIAL INSPECTIONS.

REFERENCE DRAWINGS

1	93M-BOA-NAT-LOT-04833
2	93M-BOA-NAT-LOT-09170
3	93M-BOA-NAT-LOT-01976
4	93M-BOA-NAT-LOT-20021
5	
6	
7	
8	
9	

6TH OF OCTOBER CITY RAIL TRANSIT MONORAIL

The Authority | Consultant: Hill International | Main Contractor: ORASCOM CONSTRUCTION, BOMBARDIER | Structural Designer: INNOVA TRANSPORTATION

KEY PLAN:

SCALE: AS SHOWN | SHOPDRAWING | DATE: 09/29/2023

REV	DATE	DSG.	CHK.	APP.	AMENDMENTS	STATUS
B	08/29/2023	M.KH	M.KH	DR.M.M	ISSUED FOR INFORMATION	IFI
A	09/21/2022	M.KH	M.KH	DR.M.M	ISSUED FOR INFORMATION	IFI

DRAWING TITLE
6TH OF OCTOBER MONORAIL
SERVICE WALKWAYS
ZONE(1016)
Z16-CHQ018

Project Code	Rubric	Initiator	Lot	Ref	Number	Revision
93M	0476	ACC	60DEP	DWG	16238	B

Tekla structures

Same comments as 93M-0476-ACC-60DEP-DWG-16053-B.

REVIEWED WITH COMMENT
MONORAILS PROJECT

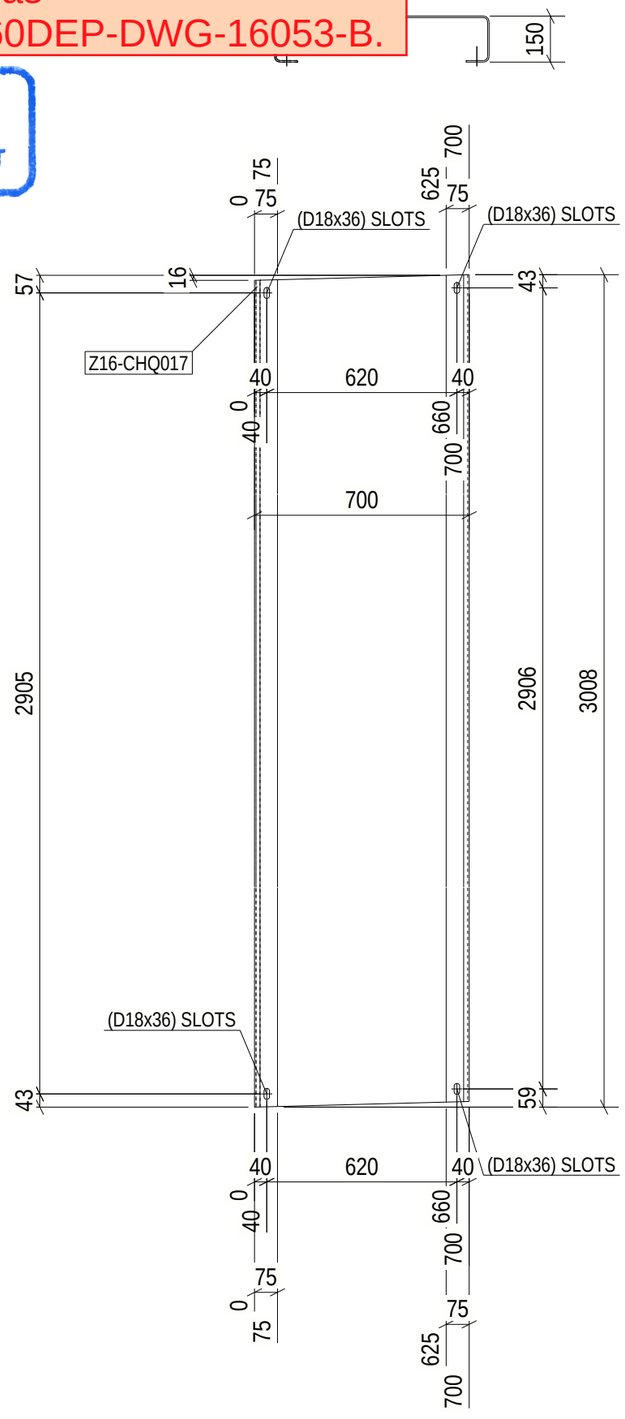

Length & Area & Weight per piece						
Z16-CHQ017	CHQD5*1103.4	S235JR	1	3088.4	6.63	129.0
Mark	Profile	Grade	QTY	Length	Area	Weight

1 REQ'D AS DRAWN MK'D Z16-CHQ017

6 October: Monorail
Engineering Unit
Valid For Construction

GENERAL NOTES:

1. THE DIMENSIONS SHOWN ARE NOMINAL (IN MILLIMETERS), U.N.O.
2. WELD SIZESHALL BE AISC MINIMUM OF 6 mm UNLESS NOTED OTHERWISE.
3. ALL FIELD WELDS SHALL BE INSPECTED PER QUALITY ASSURANCE AND SPECIAL INSPECTIONS.

REFERENCE DRAWINGS

1	93M-BOA-NAT-LOT-04833
2	93M-BOA-NAT-LOT-09170
3	93M-BOA-NAT-LOT-01976
4	93M-BOA-NAT-LOT-20021
5	
6	
7	
8	
9	

6TH OF OCTOBER CITY RAIL TRANSIT MONORAIL

The Authority | Consultant: Hill International | Main Contractor: ORASCOM CONSTRUCTION, BOMBARDIER | Structural Designer: INNOVA TRANSPORTATION

KEY PLAN:

SCALE	SHOPDRAWING	DATE
AS SHOWN		09/29/2023

REV	DATE	DSG.	CHK.	APP.	AMENDMENTS	STATUS
B	08/29/2023	M.KH	M.KH	DR.M.M	ISSUED FOR INFORMATION	IFI
A	09/21/2022	M.KH	M.KH	DR.M.M	ISSUED FOR INFORMATION	IFI

DRAWING TITLE

6TH OF OCTOBER MONORAIL
SERVICE WALKWAYS
ZONE(1016)
Z16-CHQ017

Project Code	Rubric	Initiator	Lot	Ref	Number	Revision
93M	0476	ACC	60DEP	DWG	16239	B

Tekla structures

Same comments as 93M-0476-ACC-60DEP-DWG-16053-B.

REVIEWED WITH COMMENT
MONORAILS PROJECT

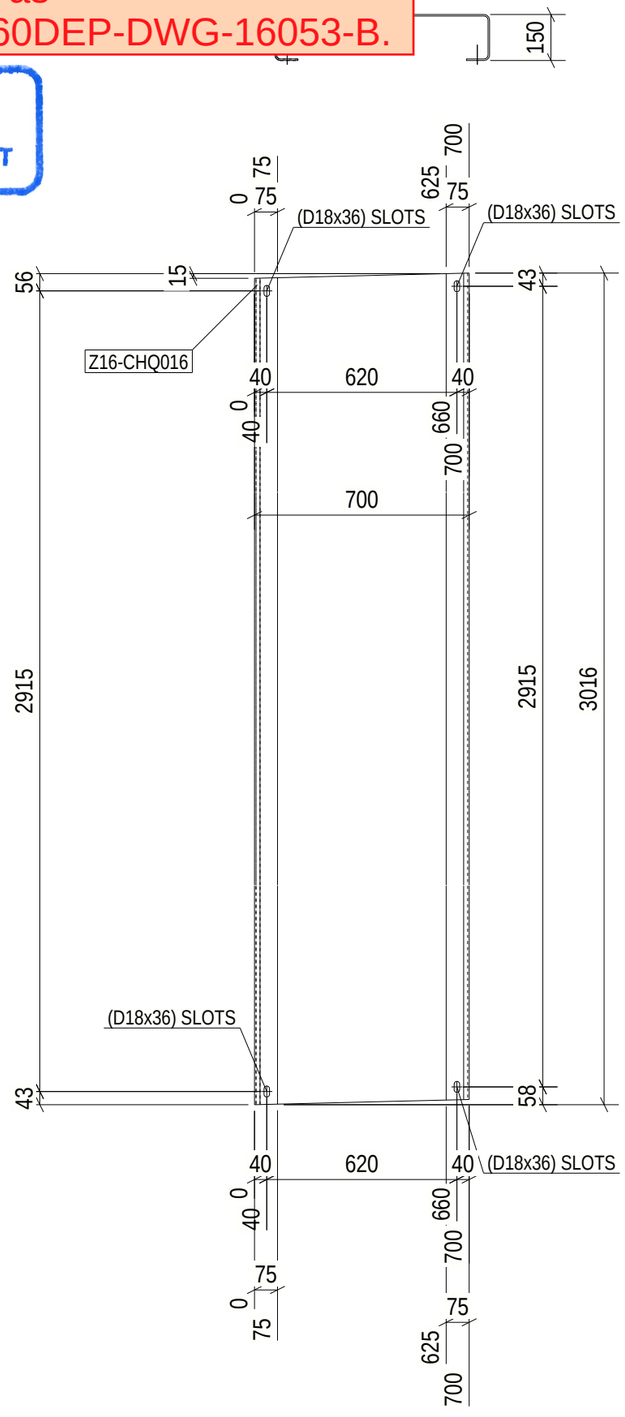

Length & Area & Weight per piece						
Z16-CHQ016	CHQD5*1103.4	S235JR	1	3097.7	6.65	129.3
Mark	Profile	Grade	QTY	Length	Area	Weight

1 REQ'D AS DRAWN MK'D Z16-CHQ016

6 October: Monorail
Engineering Unit
Valid For Construction

GENERAL NOTES:

1. THE DIMENSIONS SHOWN ARE NOMINAL (IN MILLIMETERS), U.N.O.
2. WELD SIZESHALL BE AISC MINIMUM OF 6 mm UNLESS NOTED OTHERWISE.
3. ALL FIELD WELDS SHALL BE INSPECTED PER QUALITY ASSURANCE AND SPECIAL INSPECTIONS.

REFERENCE DRAWINGS

1	93M-BOA-NAT-LOT-04833
2	93M-BOA-NAT-LOT-09170
3	93M-BOA-NAT-LOT-01976
4	93M-BOA-NAT-LOT-20021
5	
6	
7	
8	
9	

6TH OF OCTOBER CITY RAIL TRANSIT MONORAIL

The Authority | Consultant: Hill International | Main Contractor: ORASCOM CONSTRUCTION, BOMBARDIER | Structural Designer: INNOVA TRANSPORTATION

KEY PLAN:

SCALE: AS SHOWN | SHOPDRAWING | DATE: 09/29/2023

REV	DATE	DSG.	CHK.	APP.	AMENDMENTS	STATUS
B	08/29/2023	M.KH	M.KH	DR.M.M	ISSUED FOR INFORMATION	IFI
A	09/21/2022	M.KH	M.KH	DR.M.M	ISSUED FOR INFORMATION	IFI

DRAWING TITLE
6TH OF OCTOBER MONORAIL
SERVICE WALKWAYS
ZONE(1016)
Z16-CHQ016

Project Code	Rubric	Initiator	Lot	Ref	Number	Revision
93M	0476	ACC	60DEP	DWG	16240	B

Tekla structures

Same comments as
93M-0476-ACC-60DEP-DWG-16053-B.

REVIEWED WITH COMMENT
MONORAILS PROJECT

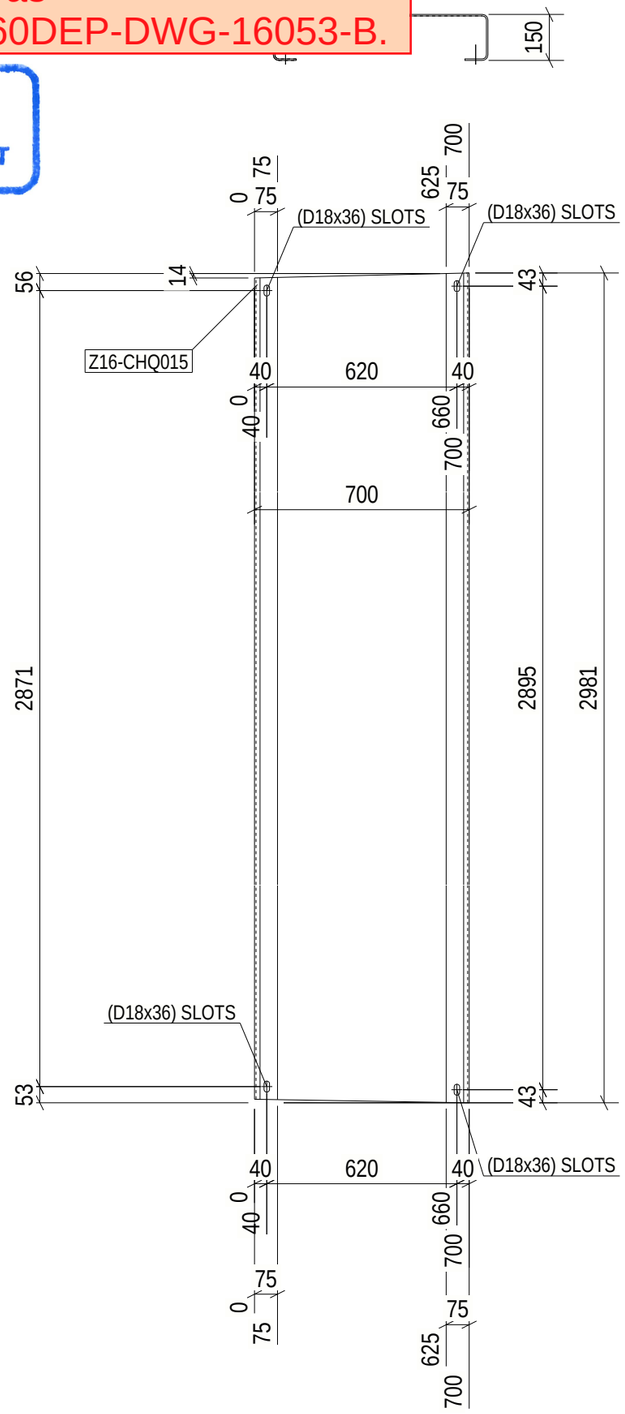

Length & Area & Weight per piece						
Z16-CHQ015	CHQD5*1103.4	S235JR	1	3063.5	6.58	128.0
Mark	Profile	Grade	QTY	Length	Area	Weight

1 REQ'D AS DRAWN MK'D Z16-CHQ015

6 October Monorail
Engineering Unit
Valid For Construction

GENERAL NOTES:

1. THE DIMENSIONS SHOWN ARE NOMINAL (IN MILLIMETERS), U.N.O.
2. WELD SIZESHALL BE AISC MINIMUM OF 6 mm UNLESS NOTED OTHERWISE.
3. ALL FIELD WELDS SHALL BE INSPECTED PER QUALITY ASSURANCE AND SPECIAL INSPECTIONS.

REFERENCE DRAWINGS

1	93M-BOA-NAT-LOT-04833
2	93M-BOA-NAT-LOT-09170
3	93M-BOA-NAT-LOT-01976
4	93M-BOA-NAT-LOT-20021
5	
6	
7	
8	
9	

6TH OF OCTOBER CITY RAIL TRANSIT MONORAIL

The Authority | Consultant: Hill International | Main Contractor: ORASCOM CONSTRUCTION, The Arab Contractors, BOMBARDIER | Structural Designer: INNOVA TRANSPORTATION

KEY PLAN:

SCALE	SHOPDRAWING	DATE
AS SHOWN		09/29/2023

REV	DATE	DSG.	CHK.	APP.	AMENDMENTS	STATUS
B	08/29/2023	M.KH	M.KH	DR.M.M	ISSUED FOR INFORMATION	IFI
A	09/21/2022	M.KH	M.KH	DR.M.M	ISSUED FOR INFORMATION	IFI

DRAWING TITLE
6TH OF OCTOBER MONORAIL
SERVICE WALKWAYS
ZONE(1016)
Z16-CHQ015

Project Code	Rubric	Initiator	Lot	Ref	Number	Revision
93M	0476	ACC	60DEP	DWG	16241	B

Tekla structures

Same comments as 93M-0476-ACC-60DEP-DWG-16053-B.

REVIEWED WITH COMMENT
MONORAILS PROJECT

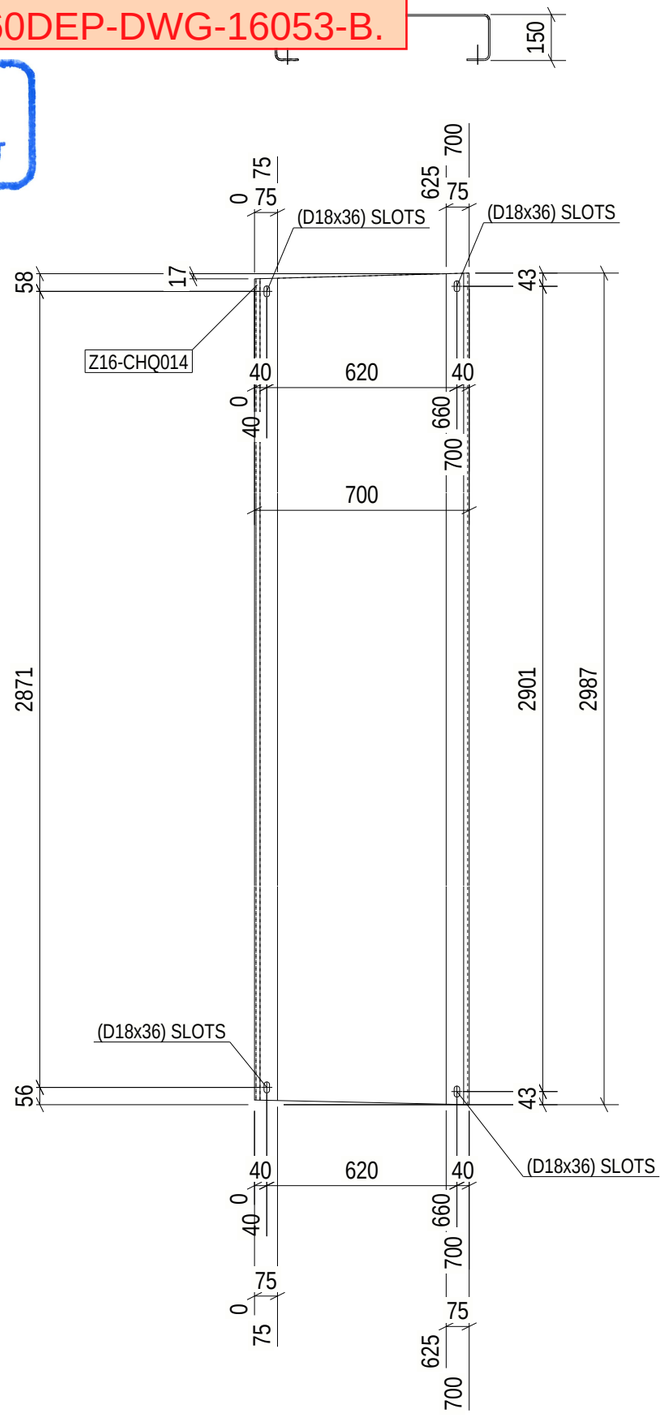

Length & Area & Weight per piece						
Z16-CHQ014	CHQD5*1103.4	S235JR	1	3066.4	6.59	128.1
Mark	Profile	Grade	QTY	Length	Area	Weight

1 REQ'D AS DRAWN MK'D Z16-CHQ014

6 October Monorail
Engineering Unit
Valid For Construction

GENERAL NOTES:

1. THE DIMENSIONS SHOWN ARE NOMINAL (IN MILLIMETERS), U.N.O.
2. WELD SIZESHALL BE AISC MINIMUM OF 6 mm UNLESS NOTED OTHERWISE.
3. ALL FIELD WELDS SHALL BE INSPECTED PER QUALITY ASSURANCE AND SPECIAL INSPECTIONS.

REFERENCE DRAWINGS

1	93M-BOA-NAT-LOT-04833
2	93M-BOA-NAT-LOT-09170
3	93M-BOA-NAT-LOT-01976
4	93M-BOA-NAT-LOT-20021
5	
6	
7	
8	
9	

6TH OF OCTOBER CITY RAIL TRANSIT MONORAIL

The Authority | Hill International Consultant | Main Contractor | Structural Designer

KEY PLAN:

SCALE: AS SHOWN | SHOPDRAWING | DATE: 03/29/2023

REV	DATE	DSG.	CHK.	APP.	AMENDMENTS	STATUS
B	08/29/2023	M.KH	M.KH	DR.M.M	ISSUED FOR INFORMATION	IFI
A	09/21/2022	M.KH	M.KH	DR.M.M	ISSUED FOR INFORMATION	IFI

DRAWING TITLE
6TH OF OCTOBER MONORAIL
SERVICE WALKWAYS
ZONE(1016)
Z16-CHQ014

Project Code	Rubric	Initiator	Lot	Ref	Number	Revision
93M	0476	ACC	60DEP	DWG	16242	B

Tekla structures

Same comments as
93M-0476-ACC-60DEP-DWG-16053-B.

REVIEWED WITH COMMENT
MONORAILS PROJECT

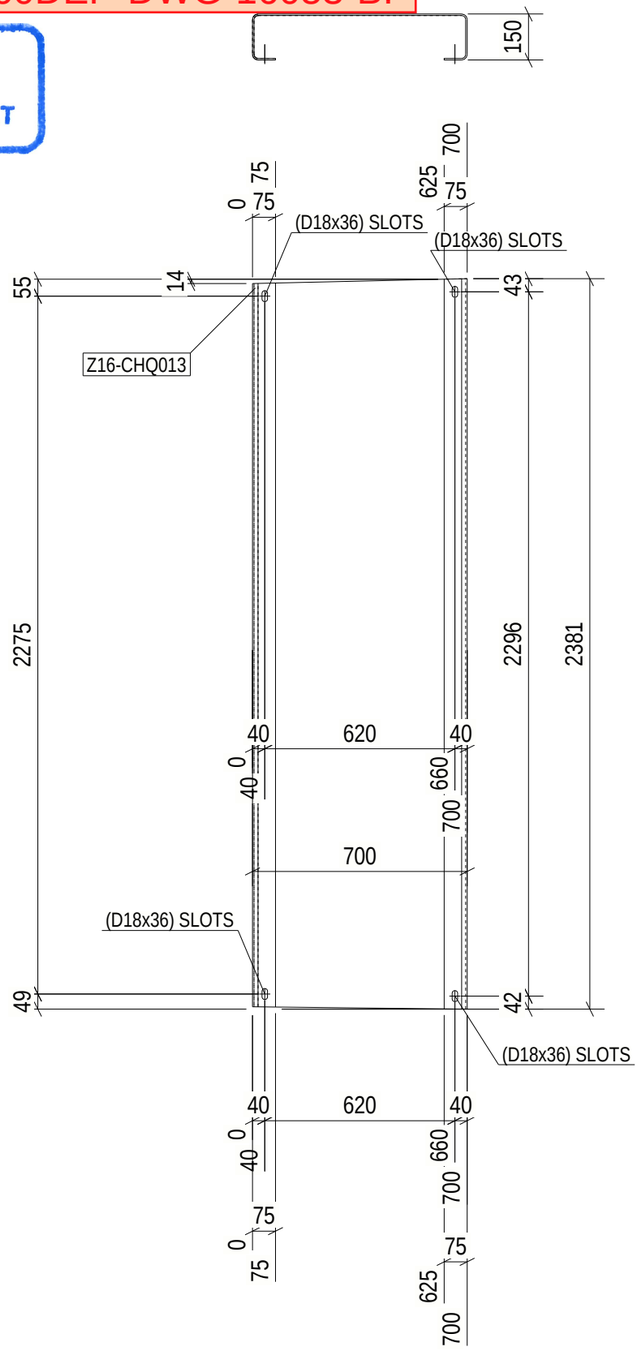

Length & Area & Weight per piece						
Z16-CHQ013	CHQD5*1103.4	S235JR	1	2466.9	5.26	102.2
Mark	Profile	Grade	QTY	Length	Area	Weight

1 REQ'D AS DRAWN MK'D Z16-CHQ013

6 October Monorail
Engineering Unit
Valid For Construction

GENERAL NOTES:

1. THE DIMENSIONS SHOWN ARE NOMINAL (IN MILLIMETERS), U.N.O.
2. WELD SIZESHALL BE AISC MINIMUM OF 6 mm UNLESS NOTED OTHERWISE.
3. ALL FIELD WELDS SHALL BE INSPECTED PER QUALITY ASSURANCE AND SPECIAL INSPECTIONS.

REFERENCE DRAWINGS

1	93M-BOA-NAT-LOT-04833
2	93M-BOA-NAT-LOT-09170
3	93M-BOA-NAT-LOT-01976
4	93M-BOA-NAT-LOT-20021
5	
6	
7	
8	
9	

6TH OF OCTOBER CITY RAIL TRANSIT MONORAIL

The Authority — Hill International (Consultant) — Main Contractor — Structural Designer

KEY PLAN:

SCALE	SHOPDRAWING	DATE
AS SHOWN		09/29/2023

REV.	DATE	DSG.	CHK.	APP.	AMENDMENTS	STATUS
B	08/29/2023	M.KH	M.KH	DR.M.M	ISSUED FOR INFORMATION	IFI
A	09/21/2022	M.KH	M.KH	DR.M.M	ISSUED FOR INFORMATION	IFI

DRAWING TITLE

6TH OF OCTOBER MONORAIL
SERVICE WALKWAYS
ZONE(1016)
Z16-CHQ013

Project Code	Rubric	Initiator	Lot	Ref	Number	Revision
93M	0476	ACC	60DEP	DWG	16243	B

Tekla structures

Same comments as
93M-0476-ACC-60DEP-DWG-16053-B.

REVIEWED WITH COMMENT MONORAILS PROJECT

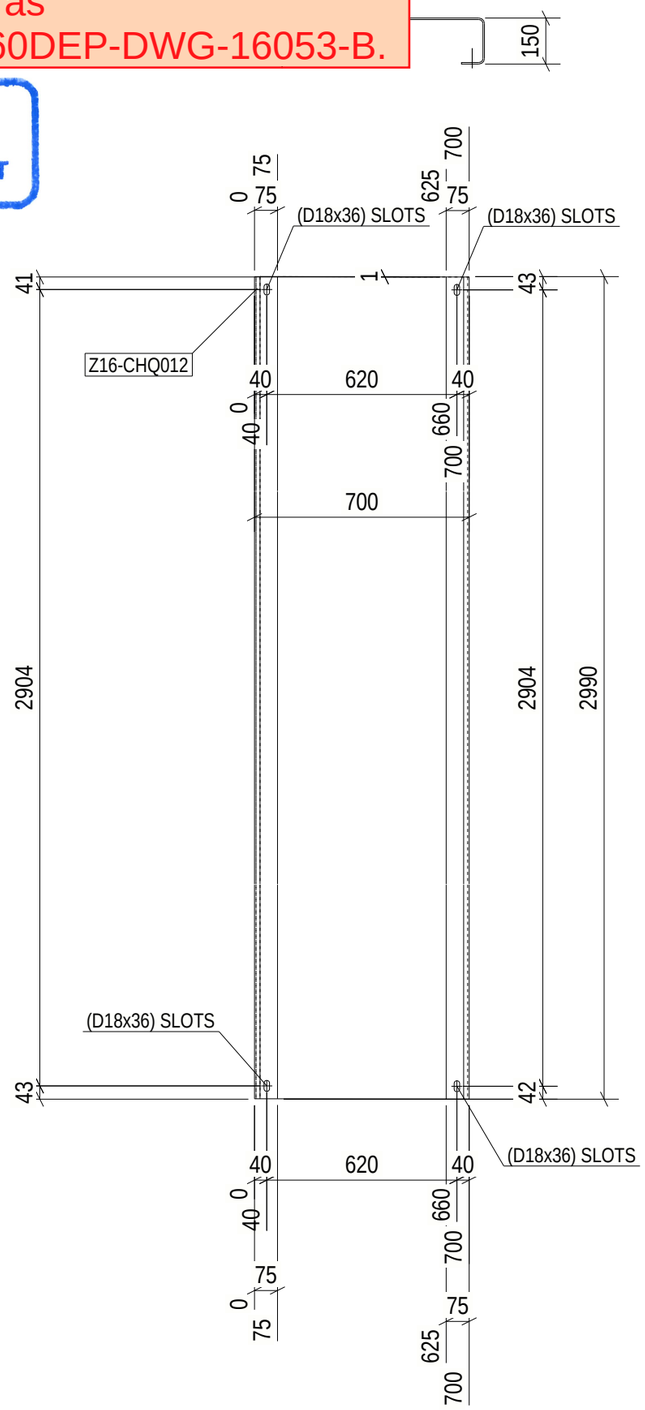

Length & Area & Weight per piece						
Z16-CHQ012	CHQD5*1103.4	S235JR	2	3088.2	6.63	128.9
Mark	Profile	Grade	QTY	Length	Area	Weight

2 REQ'D AS DRAWN MK'D Z16-CHQ012

6 October Monorail Engineering Unit
Valid For Construction

GENERAL NOTES:

1. THE DIMENSIONS SHOWN ARE NOMINAL (IN MILLIMETERS), U.N.O.
2. WELD SIZESHALL BE AISC MINIMUM OF 6 mm UNLESS NOTED OTHERWISE.
3. ALL FIELD WELDS SHALL BE INSPECTED PER QUALITY ASSURANCE AND SPECIAL INSPECTIONS.

REFERENCE DRAWINGS

1	93M-BOA-NAT-LOT-04833
2	93M-BOA-NAT-LOT-09170
3	93M-BOA-NAT-LOT-01976
4	93M-BOA-NAT-LOT-20021
5	
6	
7	
8	
9	

6TH OF OCTOBER CITY RAIL TRANSIT MONORAIL

The Authority | Hill International Consultant | ORASCOM BOMBARDIER Main Contractor | INNOVA Structural Designer

KEY PLAN:

SCALE	SHOPDRAWING	DATE
AS SHOWN		09/29/2023

REV	DATE	DSG.	CHK.	APP.	AMENDMENTS	STATUS
B	08/29/2023	M.KH	M.KH	DR.M.M	ISSUED FOR INFORMATION	IFI
A	09/21/2022	M.KH	M.KH	DR.M.M	ISSUED FOR INFORMATION	IFI

DRAWING TITLE
6TH OF OCTOBER MONORAIL
SERVICE WALKWAYS
ZONE(1016)
Z16-CHQ012

Project Code	Rubric	Initiator	Lot	Ref	Number	Revision
93M	0476	ACC	60DEP	DWG	16244	B

Tekla structures

Same comments as
93M-0476-ACC-60DEP-DWG-16053-B.

REVIEWED WITH COMMENT
MONORAILS PROJECT

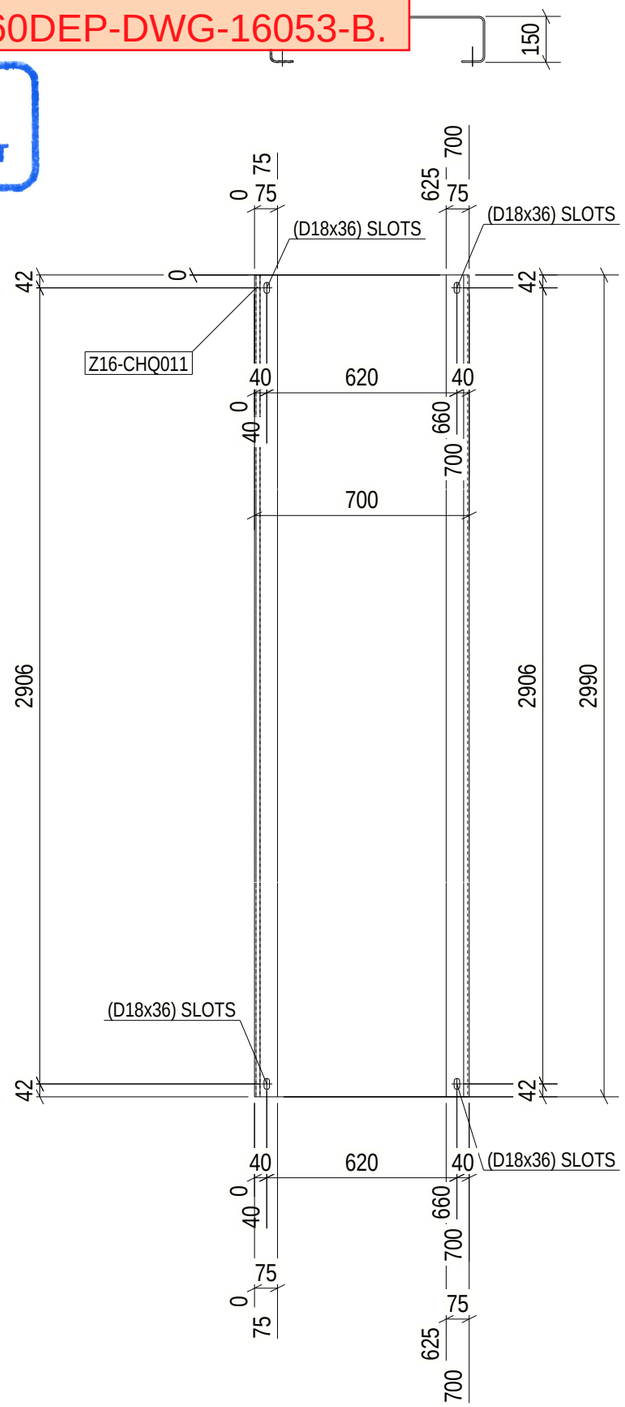

Length & Area & Weight per piece						
Z16-CHQ011	CHQD5*1103.4	S235JR	13	3090.2	6.63	129.0
Mark	Profile	Grade	QTY	Length	Area	Weight

13 REQ'D AS DRAWN MK'D Z16-CHQ011

6 October Monorail
Engineering Unit
Valid For Construction

GENERAL NOTES:

1. THE DIMENSIONS SHOWN ARE NOMINAL (IN MILLIMETERS), U.N.O.
2. WELD SIZESHALL BE AISC MINIMUM OF 6 mm UNLESS NOTED OTHERWISE.
3. ALL FIELD WELDS SHALL BE INSPECTED PER QUALITY ASSURANCE AND SPECIAL INSPECTIONS.

REFERENCE DRAWINGS

1	93M-BOA-NAT-LOT-04833
2	93M-BOA-NAT-LOT-09170
3	93M-BOA-NAT-LOT-01976
4	93M-BOA-NAT-LOT-20021
5	
6	
7	
8	
9	

6TH OF OCTOBER CITY RAIL TRANSIT MONORAIL

The Authority | Consultant: Hill International | Main Contractor: ORASCOM CONSTRUCTION, BOMBARDIER | Structural Designer: INNOVA TRANSPORTATION

KEY PLAN:

SCALE: AS SHOWN | SHOPDRAWING | DATE: 09/29/2023

REV	DATE	DSG.	CHK.	APP.	AMENDMENTS	STATUS
B	08/29/2023	M.KH	M.KH	DR.M.M	ISSUED FOR INFORMATION	IFI
A	09/21/2022	M.KH	M.KH	DR.M.M	ISSUED FOR INFORMATION	IFI

DRAWING TITLE
6TH OF OCTOBER MONORAIL
SERVICE WALKWAYS
ZONE(1016)
Z16-CHQ011

Project Code	Rubric	Initiator	Lot	Ref	Number	Revision
93M	0476	ACC	60DEP	DWG	16245	B

Tekla structures

Same comments as
93M-0476-ACC-60DEP-DWG-16053-B.

REVIEWED WITH COMMENT
MONORAILS PROJECT

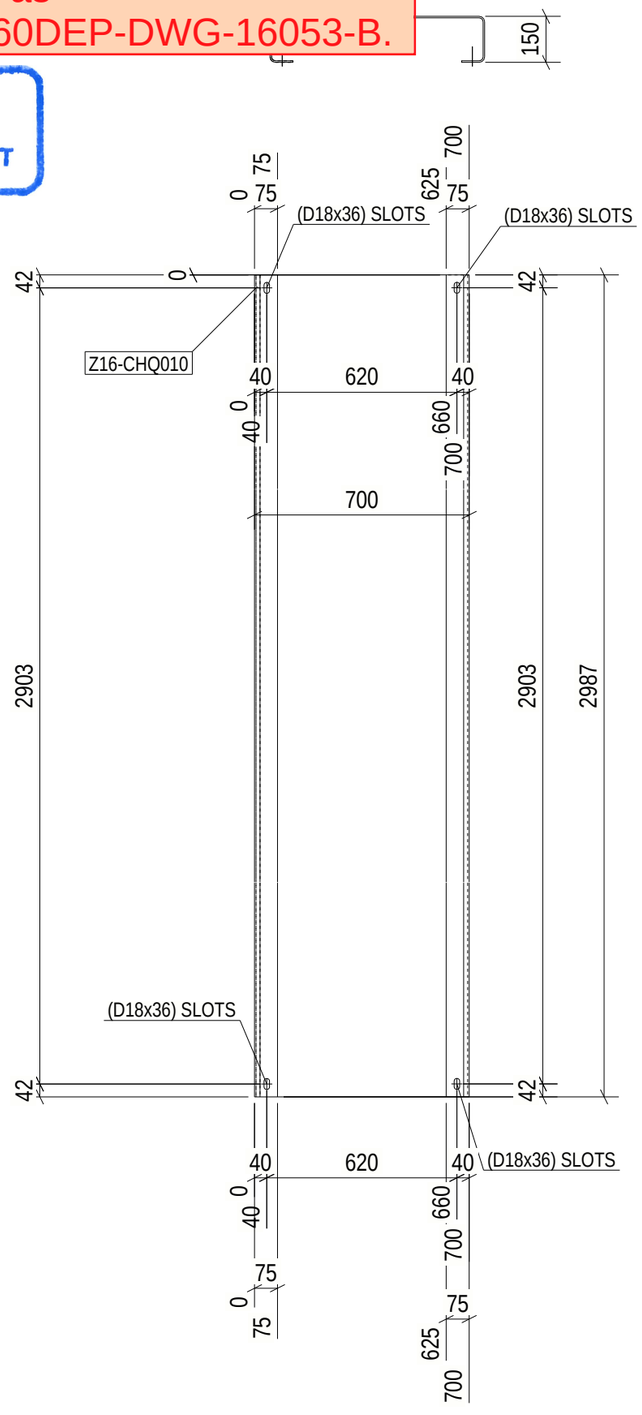

Length & Area & Weight per piece						
Z16-CHQ010	CHQD5*1103.4	S235JR	2	3087.1	6.63	128.9
Mark	Profile	Grade	QTY	Length	Area	Weight

2 REQ'D AS DRAWN MK'D Z16-CHQ010

6 October: Monorail
Engineering Unit
Valid For Construction

GENERAL NOTES:

1. THE DIMENSIONS SHOWN ARE NOMINAL (IN MILLIMETERS), U.N.O.
2. WELD SIZESHALL BE AISC MINIMUM OF 6 mm UNLESS NOTED OTHERWISE.
3. ALL FIELD WELDS SHALL BE INSPECTED PER QUALITY ASSURANCE AND SPECIAL INSPECTIONS.

REFERENCE DRAWINGS

1	93M-BOA-NAT-LOT-04833
2	93M-BOA-NAT-LOT-09170
3	93M-BOA-NAT-LOT-01976
4	93M-BOA-NAT-LOT-20021
5	
6	
7	
8	
9	

6TH OF OCTOBER CITY RAIL TRANSIT MONORAIL

The Authority | Consultant: Hill International | Main Contractor: ORASCOM CONSTRUCTION, BOMBARDIER | Structural Designer: INNOVA TRANSPORTATION

KEY PLAN:

SCALE: AS SHOWN | SHOPDRAWING | DATE: 09/29/2023

REV	DATE	DSG.	CHK.	APP.	AMENDMENTS	STATUS
B	08/29/2023	M.KH	M.KH	DR.M.M	ISSUED FOR INFORMATION	IFI
A	09/21/2022	M.KH	M.KH	DR.M.M	ISSUED FOR INFORMATION	IFI

DRAWING TITLE
6TH OF OCTOBER MONORAIL
SERVICE WALKWAYS
ZONE(1016)
Z16-CHQ010

Project Code	Rubric	Initiator	Lot	Ref	Number	Revision
93M	0476	ACC	60	DEP	DWG-16246	B

Tekla structures

Slot size is missing in the drawing.

REVIEWED WITH COMMENT MONORAILS PROJECT

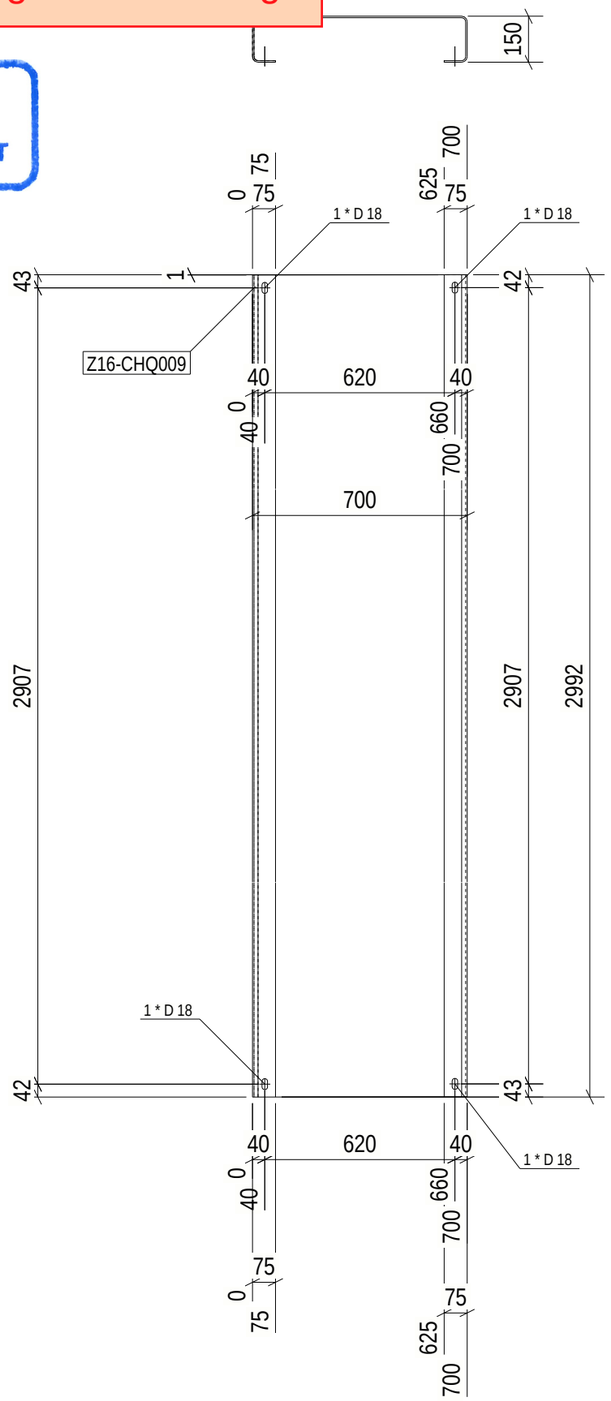

Length & Area & Weight per piece						
Z16-CHQ009	CHQD5*1103.4	S235JR	4	3091.3	6.64	129.0
Mark	Profile	Grade	QTY	Length	Area	Weight

4 REQ'D AS DRAWN MK'D Z16-CHQ009

6 October Monorail Engineering Unit Valid For Construction

GENERAL NOTES:

1. THE DIMENSIONS SHOWN ARE NOMINAL (IN MILLIMETERS), U.N.O.
2. WELD SIZESHALL BE AISC MINIMUM OF 6 mm UNLESS NOTED OTHERWISE.
3. ALL FIELD WELDS SHALL BE INSPECTED PER QUALITY ASSURANCE AND SPECIAL INSPECTIONS.

REFERENCE DRAWINGS

1	93M-BOA-NAT-LOT-04833
2	93M-BOA-NAT-LOT-09170
3	93M-BOA-NAT-LOT-01976
4	93M-BOA-NAT-LOT-20021
5	
6	
7	
8	
9	

6TH OF OCTOBER CITY RAIL TRANSIT MONORAIL

The Authority | Hill International Consultant | ORASCOM BOMBARDIER Main Contractor | INNOVA Structural Designer

KEY PLAN:

SCALE	SHOPDRAWING	DATE
AS SHOWN		09/29/2023

REV	DATE	DSG.	CHK.	APP.	AMENDMENTS	STATUS
B	08/29/2023	M.KH	M.KH	DR.M.M	ISSUED FOR INFORMATION	IFI
A	09/21/2022	M.KH	M.KH	DR.M.M	ISSUED FOR INFORMATION	IFI

DRAWING TITLE

6TH OF OCTOBER MONORAIL SERVICE WALKWAYS ZONE(1016)

Z16-CHQ009

Project Code	Rubric	Initiator	Lot	Ref	Number	Revision
93M	0476	ACC	60DEP	DWG	16247	B

Tekla structures

Same comments as
93M-0476-ACC-60DEP-DWG-16053-B.

REVIEWED WITH COMMENT
MONORAILS PROJECT

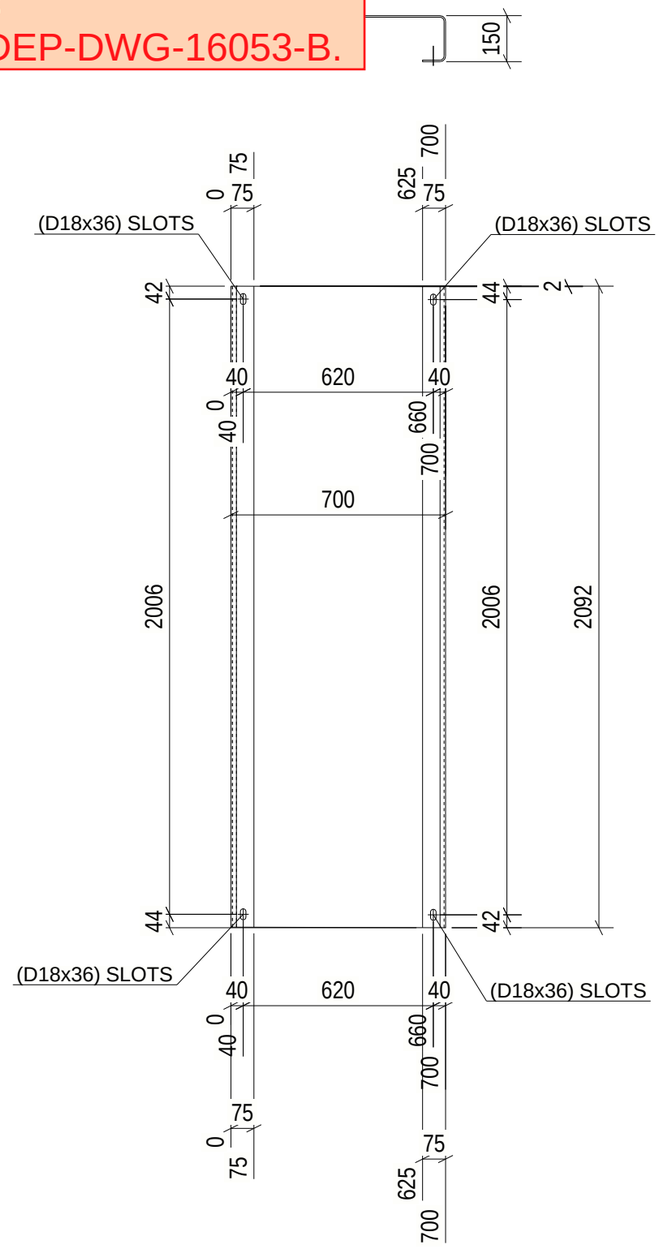

Length & Area & Weight per piece						
Z16-CHQ008	CHQD5*1103.4	S235JR	1	2189.7	4.64	90.1
Mark	Profile	Grade	QTY	Length	Area	Weight

1 REQ'D AS DRAWN MK'D Z16-CHQ008

6 October Monorail
Engineering Unit
Valid For Construction

GENERAL NOTES:

1. THE DIMENSIONS SHOWN ARE NOMINAL (IN MILLIMETERS), U.N.O.
2. WELD SIZESHALL BE AISC MINIMUM OF 6 mm UNLESS NOTED OTHERWISE.
3. ALL FIELD WELDS SHALL BE INSPECTED PER QUALITY ASSURANCE AND SPECIAL INSPECTIONS.

REFERENCE DRAWINGS

1	93M-BOA-NAT-LOT-04833
2	93M-BOA-NAT-LOT-09170
3	93M-BOA-NAT-LOT-01976
4	93M-BOA-NAT-LOT-20021
5	
6	
7	
8	
9	

6TH OF OCTOBER CITY RAIL TRANSIT MONORAIL

The Authority | Consultant: Hill International | Main Contractor: ORASCOM CONSTRUCTION, BOMBARDIER | Structural Designer: INNOVA TRANSPORTATION

KEY PLAN:

SCALE	SHOPDRAWING	DATE
AS SHOWN		09/29/2023

REV	DATE	DSG.	CHK.	APP.	AMENDMENTS	STATUS
B	09/29/2023	M.KH	M.KH	DR.M.M	ISSUED FOR INFORMATION.	IFI
A	09/21/2022	M.KH	M.KH	DR.M.M	ISSUED FOR INFORMATION.	IFI

DRAWING TITLE
6TH OF OCTOBER MONORAIL
SERVICE WALKWAYS
ZONE(1016)
Z16-CHQ008

Project Code	Rubric	Initiator	Lot	Ref	Number	Revision
93	M047	ACC	60DEP	DWG	16248	B

Tekla structures

Same comments as
93M-0476-ACC-60DEP-DWG-16053-B.

REVIEWED WITH COMMENT
MONORAILS PROJECT

Length & Area & Weight per piece						
Z16-CHQ007	CHQD5*1103.4	S235JR	1	3094.0	6.64	129.1
Mark	Profile	Grade	QTY	Length	Area	Weight

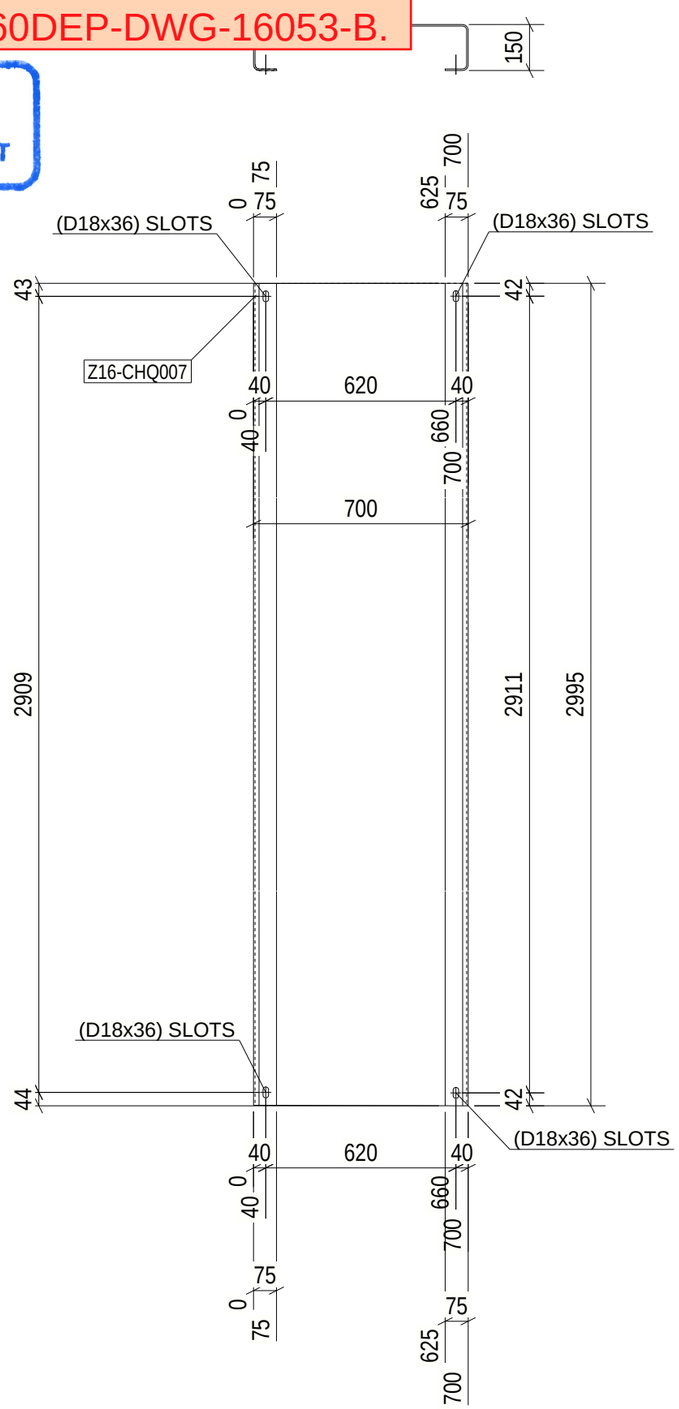

1 REQ'D AS DRAWN MK'D Z16-CHQ007

6 October Monorail
Engineering Unit
Valid For Construction

GENERAL NOTES:

1. THE DIMENSIONS SHOWN ARE NOMINAL (IN MILLIMETERS), U.N.O.
2. WELD SIZESHALL BE AISC MINIMUM OF 6 mm UNLESS NOTED OTHERWISE.
3. ALL FIELD WELDS SHALL BE INSPECTED PER QUALITY ASSURANCE AND SPECIAL INSPECTIONS.

REFERENCE DRAWINGS

1	93M-BOA-NAT-LOT-04833
2	93M-BOA-NAT-LOT-09170
3	93M-BOA-NAT-LOT-01976
4	93M-BOA-NAT-LOT-20021
5	
6	
7	
8	
9	

6TH OF OCTOBER CITY RAIL TRANSIT MONORAIL

The Authority | Consultant: Hill International | Main Contractor: ORASCOM CONSTRUCTION, BOMBARDIER | Structural Designer: INNOVA TRANSPORTATION

KEY PLAN:

SCALE	SHOPDRAWING	DATE
AS SHOWN		09/29/2023

DRAWING TITLE
6TH OF OCTOBER MONORAIL
SERVICE WALKWAYS
ZONE(1016)
Z16-CHQ007

REV.	DATE	DSG.	CHK.	APP.	AMENDMENTS	STATUS
B	08/29/2023	M.KH	M.KH	DR.M.M	ISSUED FOR INFORMATION	IFI
A	09/21/2022	M.KH	M.KH	DR.M.M	ISSUED FOR INFORMATION	IFI

Project Code	Rubric	Initiator	Lot	Ref	Number	Revision
93M	0476	ACC	60DEP	DWG	16249	B

Tekla structures

Same comments as
93M-0476-ACC-60DEP-DWG-16053-B.

REVIEWED WITH COMMENT
MONORAILS PROJECT

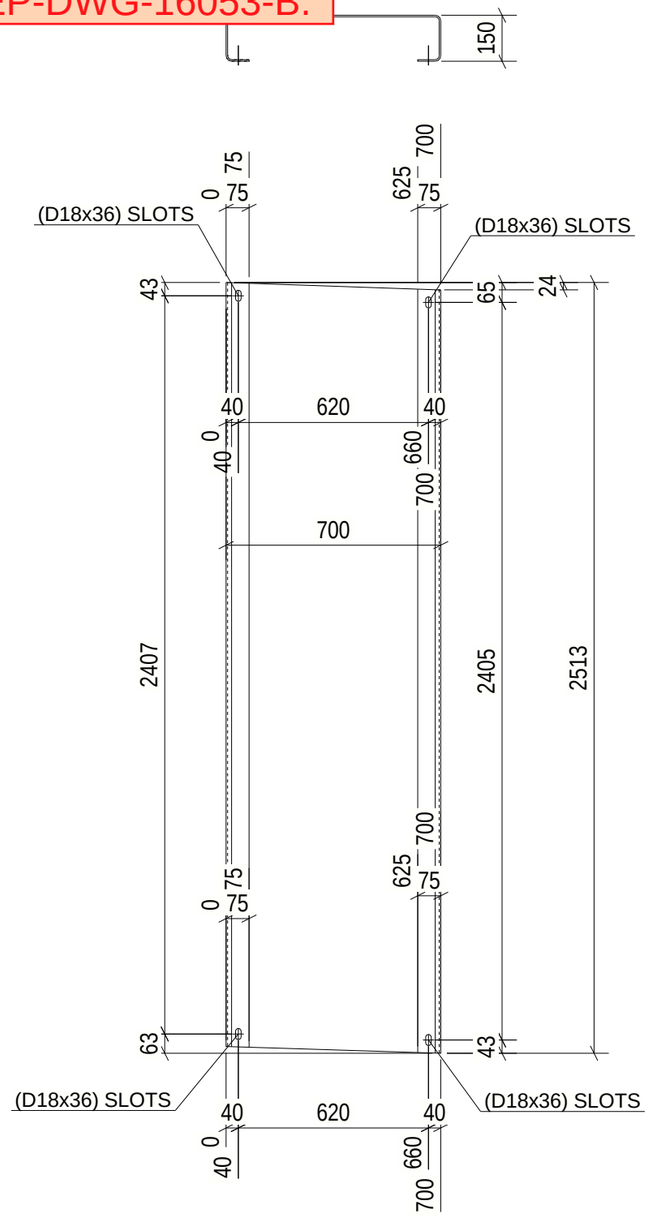

Length & Area & Weight per piece						
Z16-CHQ006	CHQD5*1103.4	S235JR	1	2588.0	5.52	107.4
Mark	Profile	Grade	QTY	Length	Area	Weight

1 REQ'D AS DRAWN MK'D Z16-CHQ006

6 October Monorail
Engineering Unit
Valid For Construction

GENERAL NOTES:

1. THE DIMENSIONS SHOWN ARE NOMINAL (IN MILLIMETERS), U.N.O.
2. WELD SIZESHALL BE AISC MINIMUM OF 6 mm UNLESS NOTED OTHERWISE.
3. ALL FIELD WELDS SHALL BE INSPECTED PER QUALITY ASSURANCE AND SPECIAL INSPECTIONS.

REFERENCE DRAWINGS

1	93M-BOA-NAT-LOT-04833
2	93M-BOA-NAT-LOT-09170
3	93M-BOA-NAT-LOT-01976
4	93M-BOA-NAT-LOT-20021
5	
6	
7	
8	
9	

6TH OF OCTOBER CITY RAIL TRANSIT MONORAIL

The Authority | Consultant: Hill International | Main Contractor: ORASCOM CONSTRUCTION / BOMBARDIER | Structural Designer: INNOVA

KEY PLAN:

SCALE: AS SHOWN | SHOPDRAWING | DATE: 09/29/2023

REV	DATE	DSG.	CHK.	APP.	AMENDMENTS	STATUS
B	08/29/2023	M.KH	M.KH	DR.M.M	ISSUED FOR INFORMATION	IFI
A	09/21/2022	M.KH	M.KH	DR.M.M	ISSUED FOR INFORMATION	IFI

DRAWING TITLE
6TH OF OCTOBER MONORAIL
SERVICE WALKWAYS
ZONE(1016)
Z16-CHQ006

Project Code	Rubric	Initiator	Lot	Ref	Number	Revision
93	M047	6ACC	60DE	P	DWG	16250	B

Tekla structures

Same comments as 93M-0476-ACC-60DEP-DWG-16053-B.

REVIEWED WITH COMMENT
MONORAILS PROJECT

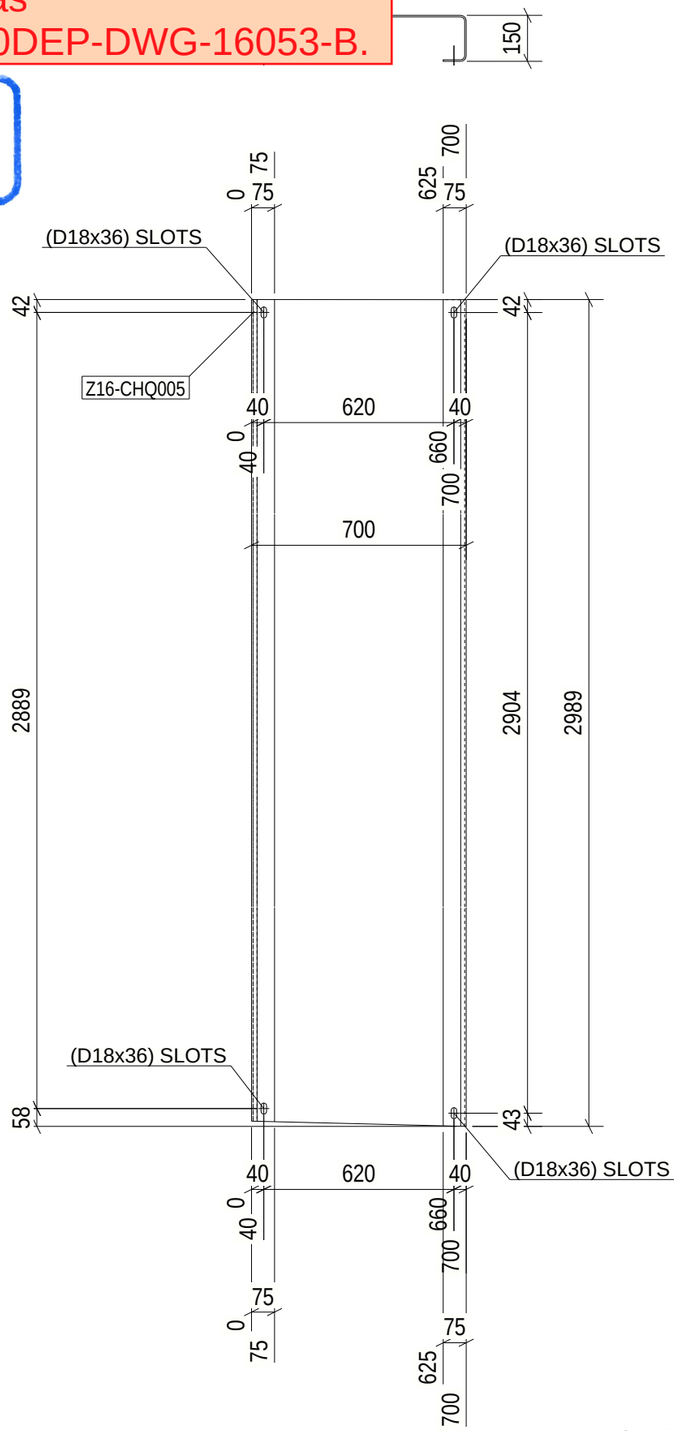

Length & Area & Weight per piece						
Z16-CHQ005	CHQD5*1103.4	S235JR	1	3081.9	6.61	128.6
Mark	Profile	Grade	QTY	Length	Area	Weight

1 REQ'D AS DRAWN MK'D Z16-CHQ005

6 October Monorail
Engineering Unit
Valid For Construction

GENERAL NOTES:

1. THE DIMENSIONS SHOWN ARE NOMINAL (IN MILLIMETERS), U.N.O.
2. WELD SIZESHALL BE AISC MINIMUM OF 6 mm UNLESS NOTED OTHERWISE.
3. ALL FIELD WELDS SHALL BE INSPECTED PER QUALITY ASSURANCE AND SPECIAL INSPECTIONS.

REFERENCE DRAWINGS

1	93M-BOA-NAT-LOT-04833
2	93M-BOA-NAT-LOT-09170
3	93M-BOA-NAT-LOT-01976
4	93M-BOA-NAT-LOT-20021
5	
6	
7	
8	
9	

6TH OF OCTOBER CITY RAIL TRANSIT MONORAIL

The Authority | Consultant: Hill International | Main Contractor: ORASCOM CONSTRUCTION, BOMBARDIER | Structural Designer: INNOVA TRANSPORTATION

KEY PLAN:

SCALE: AS SHOWN | SHOPDRAWING | DATE: 03/29/2023

REV	DATE	DSG.	CHK.	APP.	AMENDMENTS	STATUS
B	08/29/2023	M.KH	M.KH	DR.M.M	ISSUED FOR INFORMATION	IFI
A	09/21/2022	M.KH	M.KH	DR.M.M	ISSUED FOR INFORMATION	IFI

DRAWING TITLE
6TH OF OCTOBER MONORAIL
SERVICE WALKWAYS
ZONE(1016)
Z16-CHQ005

Project Code	Rubric	Initiator	Lot	Ref	Number	Revision
93M	0476	ACC	60DEP	DWG	16251	B

Tekla structures

Same comments as
93M-0476-ACC-60DEP-DWG-16247-B.

REVIEWED WITH COMMENT
MONORAILS PROJECT

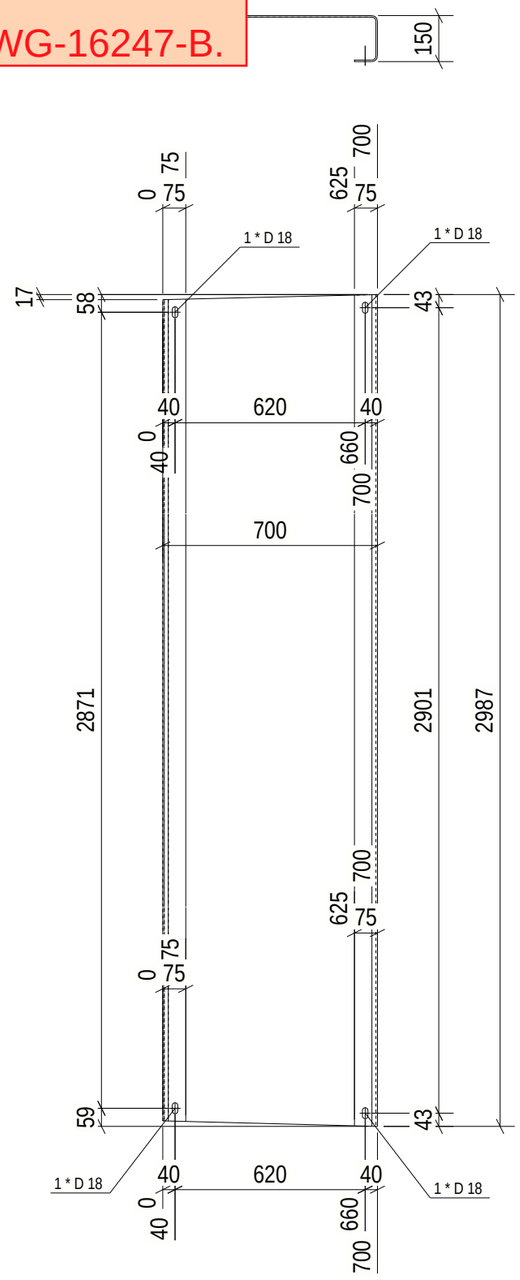

Length & Area & Weight per piece						
Z16-CHQ004	CHQD5*1103.4	S235JR	1	3072.3	6.59	128.1
Mark	Profile	Grade	QTY	Length	Area	Weight

1 REQ'D AS DRAWN MK'D Z16-CHQ004

6 October Monorail
Engineering Unit
Valid For Construction

GENERAL NOTES:

1. THE DIMENSIONS SHOWN ARE NOMINAL (IN MILLIMETERS), U.N.O.
2. WELD SIZESHALL BE AISC MINIMUM OF 6 mm UNLESS NOTED OTHERWISE.
3. ALL FIELD WELDS SHALL BE INSPECTED PER QUALITY ASSURANCE AND SPECIAL INSPECTIONS.

REFERENCE DRAWINGS

1	93M-BOA-NAT-LOT-04833
2	93M-BOA-NAT-LOT-09170
3	93M-BOA-NAT-LOT-01976
4	93M-BOA-NAT-LOT-20021
5	
6	
7	
8	
9	

6TH OF OCTOBER CITY RAIL TRANSIT MONORAIL

The Authority | Consultant: Hill International | Main Contractor: Orascom Construction – Bombardier | Structural Designer: Innova

KEY PLAN:

SCALE: AS SHOWN | SHOPDRAWING | DATE: 09/29/2023

REV	DATE	DSG.	CHK.	APP.	AMENDMENTS	STATUS
B	09/29/2023	M.KH	M.KH	DR.M.M	ISSUED FOR INFORMATION	IFI
A	09/21/2022	M.KH	M.KH	DR.M.M	ISSUED FOR INFORMATION	IFI

DRAWING TITLE
6TH OF OCTOBER MONORAIL
SERVICE WALKWAYS
ZONE(1016)
Z16-CHQ004

Project Code	Rubric	Initiator	Lot	Ref	Number	Revision
93	M047	6ACC	60DE	P	DWG	16252	B

Tekla structures

Same comments as
93M-0476-ACC-60DEP-DWG-16247-B.

REVIEWED WITH COMMENT
MONORAILS PROJECT

Length & Area & Weight per piece						
Z16-CHQ003	CHQD5*1103.4	S235JR	1	3076.9	6.60	128.3
Mark	Profile	Grade	QTY	Length	Area	Weight

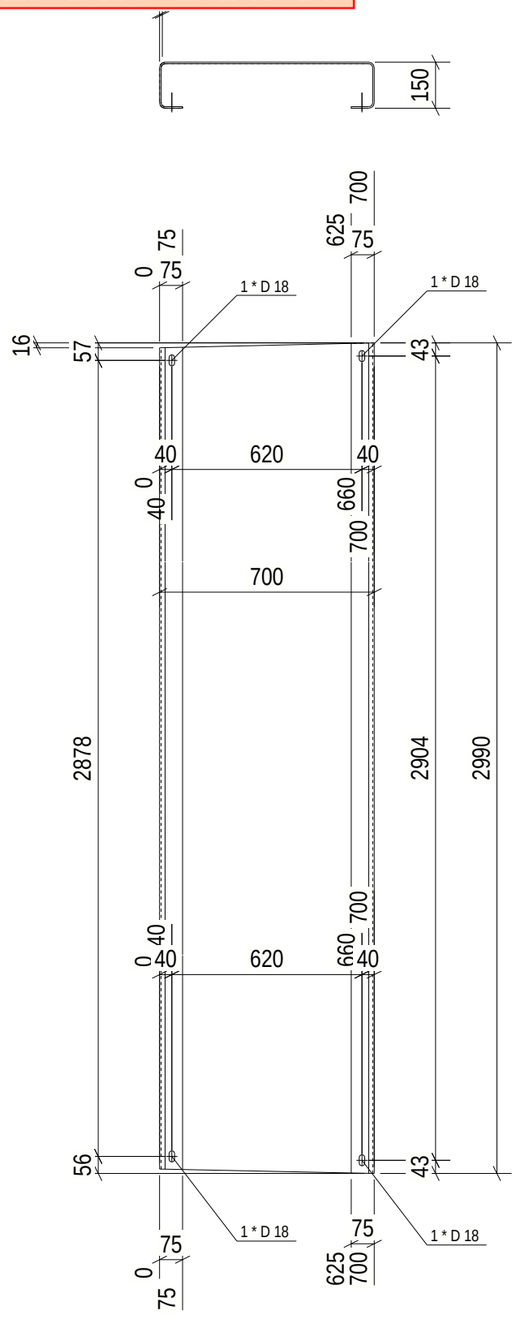

1 REQ'D AS DRAWN MK'D Z16-CHQ003

6 October Monorail
Engineering Unit
Valid For Construction

GENERAL NOTES:

1. THE DIMENSIONS SHOWN ARE NOMINAL (IN MILLIMETERS), U.N.O.
2. WELD SIZESHALL BE AISC MINIMUM OF 6 mm UNLESS NOTED OTHERWISE.
3. ALL FIELD WELDS SHALL BE INSPECTED PER QUALITY ASSURANCE AND SPECIAL INSPECTIONS.

REFERENCE DRAWINGS

1	93M-BOA-NAT-LOT-04833
2	93M-BOA-NAT-LOT-09170
3	93M-BOA-NAT-LOT-01976
4	93M-BOA-NAT-LOT-20021
5	
6	
7	
8	
9	

6TH OF OCTOBER CITY RAIL TRANSIT MONORAIL

The Authority — Hill International (Consultant) — Main Contractor — Structural Designer

KEY PLAN:

SCALE	SHOPDRAWING	DATE
AS SHOWN		09/29/2023

REV	DATE	DSG.	CHK.	APP.	AMENDMENTS	STATUS
B	08/29/2023	M.KH	M.KH	DR.M.M	ISSUED FOR INFORMATION	IFI
A	09/21/2022	M.KH	M.KH	DR.M.M	ISSUED FOR INFORMATION	IFI

DRAWING TITLE
6TH OF OCTOBER MONORAIL
SERVICE WALKWAYS
ZONE(1016)
Z16-CHQ003

Project Code	Rubric	Initiator	Lot	Ref	Number	Revision
93	M047	6ACC	60DEP	DWG	16253	B

Tekla structures

Same comments as 93M-0476-ACC-60DEP-DWG-16247-B.

REVIEWED WITH COMMENT
MONORAILS PROJECT

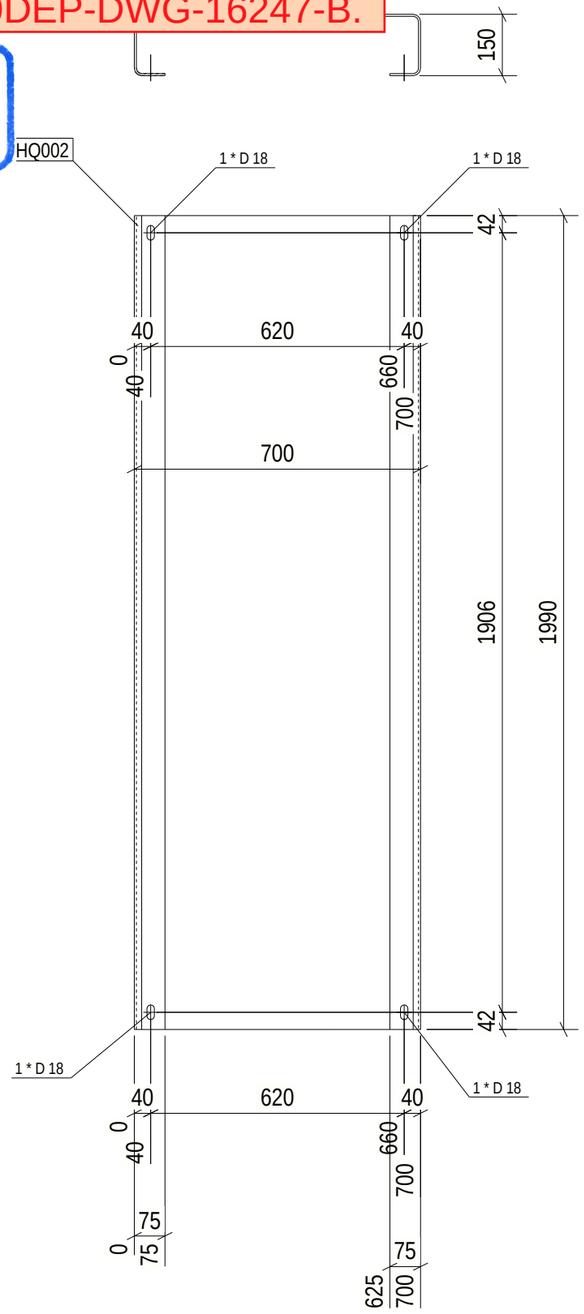

Length & Area & Weight per piece						
Z16-CHQ002	CHQD5*1103.4	S235JR	1	2090.0	4.42	85.8
Mark	Profile	Grade	QTY	Length	Area	Weight

1 REQ'D AS DRAWN MK'D Z16-CHQ002

6 October: Monorail
Engineering Unit
Valid For Construction

GENERAL NOTES:

1. THE DIMENSIONS SHOWN ARE NOMINAL (IN MILLIMETERS), U.N.O.
2. WELD SIZESHALL BE AISC MINIMUM OF 6 mm UNLESS NOTED OTHERWISE.
3. ALL FIELD WELDS SHALL BE INSPECTED PER QUALITY ASSURANCE AND SPECIAL INSPECTIONS.

REFERENCE DRAWINGS

1	93M-BOA-NAT-LOT-04833
2	93M-BOA-NAT-LOT-09170
3	93M-BOA-NAT-LOT-01976
4	93M-BOA-NAT-LOT-20021
5	
6	
7	
8	
9	

6TH OF OCTOBER CITY RAIL TRANSIT MONORAIL

The Authority | Consultant: Hill International | Main Contractor: ORASCOM CONSTRUCTION, BOMBARDIER | Structural Designer: INNOVA TRANSPORTATION

KEY PLAN:

SCALE: AS SHOWN | SHOPDRAWING | DATE: 09/29/2023

REV	DATE	DSG.	CHK.	APP.	AMENDMENTS	STATUS
B	08/29/2023	M.KH	M.KH	DR.M.M	ISSUED FOR INFORMATION	IFI
A	09/21/2022	M.KH	M.KH	DR.M.M	ISSUED FOR INFORMATION	IFI

DRAWING TITLE
6TH OF OCTOBER MONORAIL
SERVICE WALKWAYS
ZONE(1016)
Z16-CHQ002

Project Code	Rubric	Initiator	Lot	Ref	Number	Revision
93M	0476	ACC	60DEP	DWG	16254	B

Tekla structures

Approval is subject to approval of coordination package between multi-discipline.

REVIEWED WITH COMMENT
MONORAILS PROJECT

Length & Area & Weight per piece						
Z16-BR028	L80*8	S235JR	1	1423.5	0.46	13.6
Mark	Profile	Grade	QTY	Length	Area	Weight

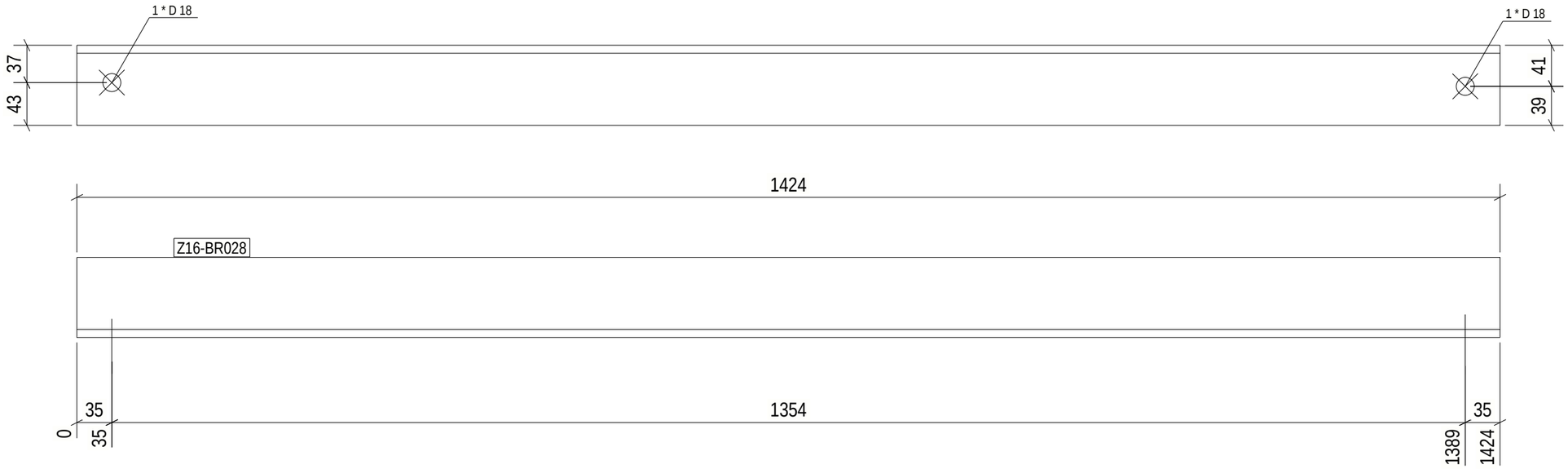

1 REQ'D AS DRAWN MK'D Z16-BR028

6 October Monorail
Engineering Unit
Valid For Construction

GENERAL NOTES:

1. THE DIMENSIONS SHOWN ARE NOMINAL (IN MILLIMETERS), U.N.O.
2. WELD SIZESHALL BE AISC MINIMUM OF 6 mm UNLESS NOTED OTHERWISE.
3. ALL FIELD WELDS SHALL BE INSPECTED PER QUALITY ASSURANCE AND SPECIAL INSPECTIONS.

REFERENCE DRAWINGS

1	93M-BOA-NAT-LOT-04833
2	93M-BOA-NAT-LOT-09170
3	93M-BOA-NAT-LOT-01976
4	93M-BOA-NAT-LOT-20021
5	
6	
7	
8	
9	

6TH OF OCTOBER CITY RAIL TRANSIT MONORAIL

The Authority | Hill International Consultant | ORASCOM CONSTRUCTION BOMBARDIER Main Contractor | INNOVA TRANSPORTATION Structural Designer

KEY PLAN:

SCALE AS SHOWN | SHOPDRAWING | DATE 09/29/2023

REV	DATE	DSG.	CHK.	APP.	AMENDMENTS	STATUS
B	08/29/2023	M.KH	M.KH	DR.M.M	ISSUED FOR INFORMATION	IFI
A	09/21/2022	M.KH	M.KH	DR.M.M	ISSUED FOR INFORMATION	IFI

DRAWING TITLE

6TH OF OCTOBER MONORAIL
SERVICE WALKWAYS
ZONE(1016)
Z16-BR028

Project Code	Rubric	Initiator	Lot	Ref	Number	Revision
93M	0476	ACC60DEP	DWG	162555	B

Tekla structures

Approval is subject to approval of coordination package between multi-discipline.

REVIEWED WITH COMMENT MONORAILS PROJECT

Length & Area & Weight per piece						
Z16-BR027	L80*8	S235JR	1	1379.3	0.44	13.2
Mark	Profile	Grade	QTY	Length	Area	Weight

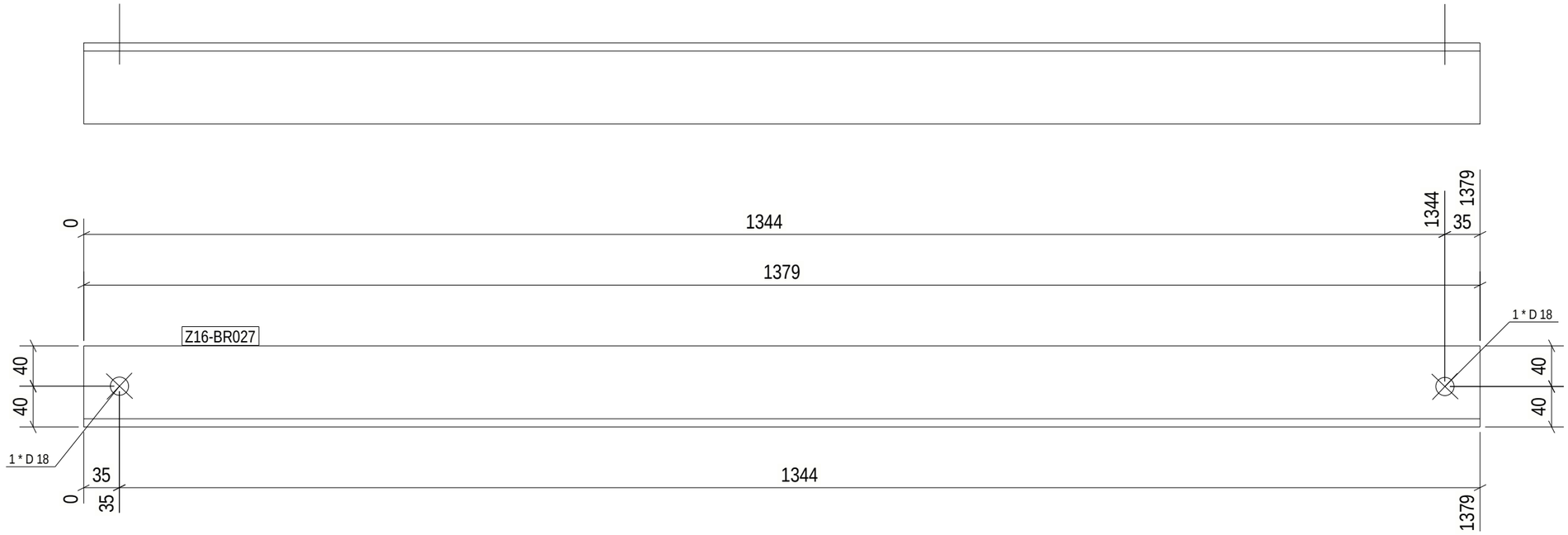

1 REQ'D AS DRAWN MK'D Z16-BR027

6 October Monorail Engineering Unit
Valid For Construction

GENERAL NOTES:

1. THE DIMENSIONS SHOWN ARE NOMINAL (IN MILLIMETERS), U.N.O.
2. WELD SIZESHALL BE AISC MINIMUM OF 6 mm UNLESS NOTED OTHERWISE.
3. ALL FIELD WELDS SHALL BE INSPECTED PER QUALITY ASSURANCE AND SPECIAL INSPECTIONS.

REFERENCE DRAWINGS

1	93M-BOA-NAT-LOT-04833
2	93M-BOA-NAT-LOT-09170
3	93M-BOA-NAT-LOT-01976
4	93M-BOA-NAT-LOT-20021
5	
6	
7	
8	
9	

6TH OF OCTOBER CITY RAIL TRANSIT MONORAIL

The Authority | Hill International Consultant | ORASCOM BOMBARDIER Main Contractor | INNOVA Structural Designer

KEY PLAN:

SCALE	SHOPDRAWING	DATE
AS SHOWN		09/29/2023

REV	DATE	DSG.	CHK.	APP.	AMENDMENTS	STATUS
B	08/29/2023	M.KH	M.KH	DR.M.M	ISSUED FOR INFORMATION	IFI
A	09/21/2022	M.KH	M.KH	DR.M.M	ISSUED FOR INFORMATION	IFI

DRAWING TITLE

6TH OF OCTOBER MONORAIL SERVICE WALKWAYS ZONE(1016)
Z16-BR027

Project Code	Rubric	Initiator	Lot	Ref	Number	Revision
93M	0476	ACC	60DEP	DWG	16256	B

Tekla structures

Approval is subject to approval of coordination package between multi-discipline.

REVIEWED WITH COMMENT
MONORAILS PROJECT

Length & Area & Weight per piece						
Z16-BR026	L80*8	S235JR	1	1434.3	0.46	13.7
Mark	Profile	Grade	QTY	Length	Area	Weight

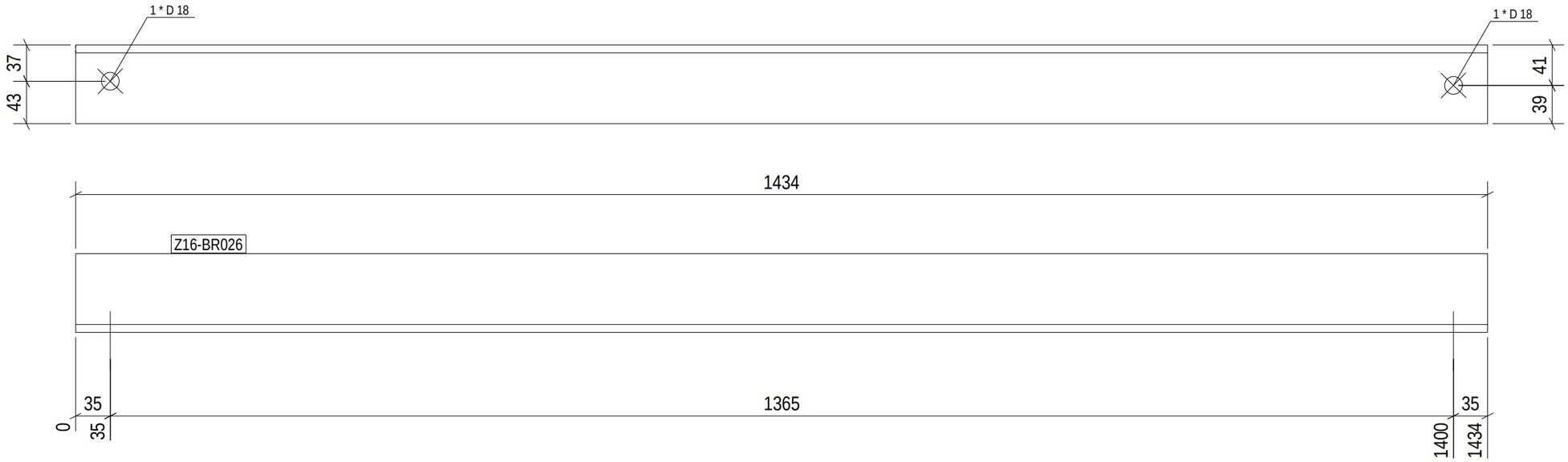

1 REQ'D AS DRAWN MK'D Z16-BR026

6 October: Monorail
Engineering Unit
Valid For Construction

GENERAL NOTES:

1. THE DIMENSIONS SHOWN ARE NOMINAL (IN MILLIMETERS), U.N.O.
2. WELD SIZESHALL BE AISC MINIMUM OF 6 mm UNLESS NOTED OTHERWISE.
3. ALL FIELD WELDS SHALL BE INSPECTED PER QUALITY ASSURANCE AND SPECIAL INSPECTIONS.

REFERENCE DRAWINGS

1	93M-BOA-NAT-LOT-04833
2	93M-BOA-NAT-LOT-09170
3	93M-BOA-NAT-LOT-01976
4	93M-BOA-NAT-LOT-20021
5	
6	
7	
8	
9	

6TH OF OCTOBER CITY RAIL TRANSIT MONORAIL

The Authority — Hill International (Consultant) — Main Contractor — Structural Designer

KEY PLAN:

SCALE: AS SHOWN | SHOPDRAWING | DATE: 09/29/2023

REV	DATE	DSG.	CHK.	APP.	AMENDMENTS	STATUS
B	08/29/2023	M.KH	M.KH	DR.M.M	ISSUED FOR INFORMATION	IFI
A	09/21/2022	M.KH	M.KH	DR.M.M	ISSUED FOR INFORMATION	IFI

DRAWING TITLE

6TH OF OCTOBER MONORAIL
SERVICE WALKWAYS
ZONE(1016)
Z16-BR026

Project Code	Rubric	Initiator	Lot	Ref	Number	Revision
93M	0476	ACC60DEP	DWG	16257		B

Tekla structures

Approval is subject to approval of coordination package between multi-discipline.

REVIEWED WITH COMMENT
MONORAILS PROJECT

Length & Area & Weight per piece						
Z16-BR025	L80*8	S235JR	1	1412.4	0.45	13.5
Mark	Profile	Grade	QTY	Length	Area	Weight

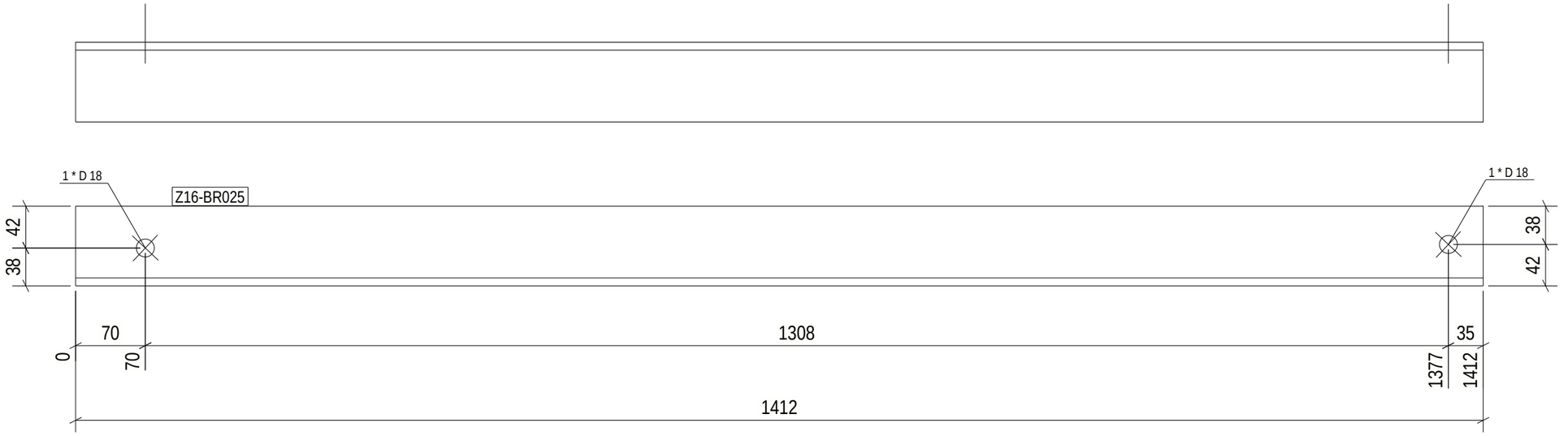

1 REQ'D AS DRAWN MK'D Z16-BR025

6 October: Monorail
Engineering Unit
Valid For Construction

GENERAL NOTES:

1. THE DIMENSIONS SHOWN ARE NOMINAL (IN MILLIMETERS), U.N.O.
2. WELD SIZESHALL BE AISC MINIMUM OF 6 mm UNLESS NOTED OTHERWISE.
3. ALL FIELD WELDS SHALL BE INSPECTED PER QUALITY ASSURANCE AND SPECIAL INSPECTIONS.

REFERENCE DRAWINGS

1	93M-BOA-NAT-LOT-04833
2	93M-BOA-NAT-LOT-09170
3	93M-BOA-NAT-LOT-01976
4	93M-BOA-NAT-LOT-20021
5	
6	
7	
8	
9	

6TH OF OCTOBER CITY RAIL TRANSIT MONORAIL

The Authority — Hill International (Consultant) — Main Contractor — Structural Designer

KEY PLAN:

SCALE: AS SHOWN | SHOPDRAWING | DATE: 09/29/2023

REV	DATE	DSG.	CHK.	APP.	AMENDMENTS	STATUS
B	08/29/2023	M.KH	M.KH	DR.M.M	ISSUED FOR INFORMATION	IFI
A	09/21/2022	M.KH	M.KH	DR.M.M	ISSUED FOR INFORMATION	IFI

DRAWING TITLE

6TH OF OCTOBER MONORAIL
SERVICE WALKWAYS
ZONE(1016)
Z16-BR025

Project Code	Rubric	Initiator	Lot	Ref	Number	Revision
93M	047	6ACC	60DE	P	DWG	16258	B

Tekla structures

Approval is subject to approval of coordination package between multi-discipline.

REVIEWED WITH COMMENT
MONORAILS PROJECT

Length & Area & Weight per piece						
Z16-BR024	L100*10	S235JR	1	2806.0	1.13	41.9
Mark	Profile	Grade	QTY	Length	Area	Weight

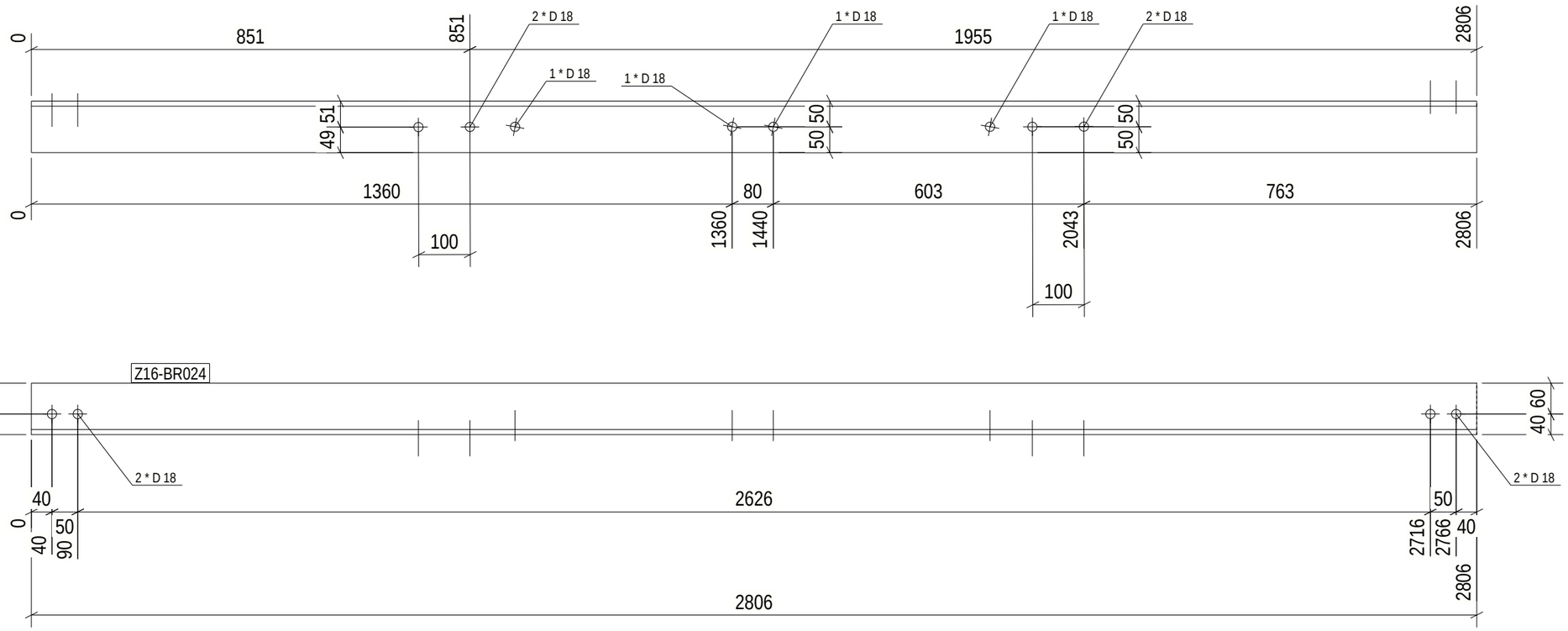

1 REQ'D AS DRAWN MK'D Z16-BR024

6 October Monorail
Engineering Unit
Valid For Construction

GENERAL NOTES:

1. THE DIMENSIONS SHOWN ARE NOMINAL (IN MILLIMETERS), U.N.O.
2. WELD SIZESHALL BE AISC MINIMUM OF 6 mm UNLESS NOTED OTHERWISE.
3. ALL FIELD WELDS SHALL BE INSPECTED PER QUALITY ASSURANCE AND SPECIAL INSPECTIONS.

REFERENCE DRAWINGS

1	93M-BOA-NAT-LOT-04833
2	93M-BOA-NAT-LOT-09170
3	93M-BOA-NAT-LOT-01976
4	93M-BOA-NAT-LOT-20021
5	
6	
7	
8	
9	

6TH OF OCTOBER CITY RAIL TRANSIT MONORAIL

The Authority | Consultant: Hill International | Main Contractor: ORASCOM CONSTRUCTION, BOMBARDIER | Structural Designer: INNOVA TRANSPORTATION

KEY PLAN:

SCALE	SHOPDRAWING	DATE
AS SHOWN		09/29/2023

REV	DATE	DSG.	CHK.	APP.	AMENDMENTS	STATUS
B	08/29/2023	M.KH	M.KH	DR.M.M	ISSUED FOR INFORMATION	IFI
A	09/21/2022	M.KH	M.KH	DR.M.M	ISSUED FOR INFORMATION	IFI

DRAWING TITLE
6TH OF OCTOBER MONORAIL
SERVICE WALKWAYS
ZONE(1016)
Z16-BR024

Project Code	Rubric	Initiator	Lot	Ref	Number	Revision
9 3 M	0 4 7 6	A C C	6 0 D E P	D W G	1 6 2 5 9	B

Tekla structures

Approval is subject to approval of coordination package between multi-discipline.

REVIEWED WITH COMMENT MONORAILS PROJECT

Length & Area & Weight per piece						
Z16-BR023	L100*10	S235JR	1	2807.5	1.13	41.9
Mark	Profile	Grade	QTY	Length	Area	Weight

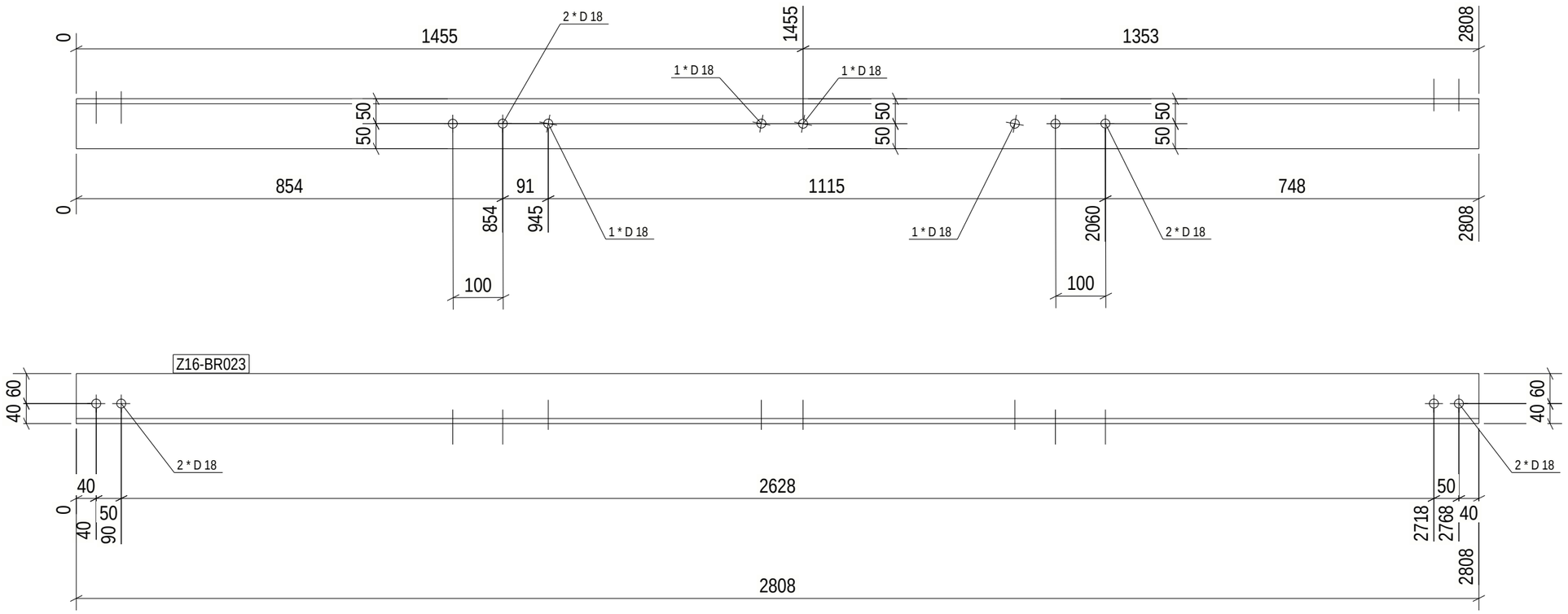

1 REQ'D AS DRAWN MK'D Z16-BR023

6 October Monorail Engineering Unit
Valid For Construction

GENERAL NOTES:

1. THE DIMENSIONS SHOWN ARE NOMINAL (IN MILLIMETERS), U.N.O.
2. WELD SIZESHALL BE AISC MINIMUM OF 6 mm UNLESS NOTED OTHERWISE.
3. ALL FIELD WELDS SHALL BE INSPECTED PER QUALITY ASSURANCE AND SPECIAL INSPECTIONS.

REFERENCE DRAWINGS

1	93M-BOA-NAT-LOT-04833
2	93M-BOA-NAT-LOT-09170
3	93M-BOA-NAT-LOT-01976
4	93M-BOA-NAT-LOT-20021
5	
6	
7	
8	
9	

6TH OF OCTOBER CITY RAIL TRANSIT MONORAIL

The Authority | Hill International Consultant | ORASCOM BOMBARDIER Main Contractor | INNOVA Structural Designer

KEY PLAN:

SCALE: AS SHOWN | SHOPDRAWING | DATE: 09/29/2023

REV	DATE	DSG.	CHK.	APP.	AMENDMENTS	STATUS
B	08/29/2023	M.KH	M.KH	DR.M.M	ISSUED FOR INFORMATION	IFI
A	09/21/2022	M.KH	M.KH	DR.M.M	ISSUED FOR INFORMATION	IFI

DRAWING TITLE

6TH OF OCTOBER MONORAIL SERVICE WALKWAYS ZONE(1016)
Z16-BR023

Project Code	Rubric	Initiator	Lot	Ref	Number	Revision
93M	0476	ACC	60DEP	DWG	16260	B

Tekla structures

Approval is subject to approval of coordination package between multi-discipline.

REVIEWED WITH COMMENT
MONORAILS PROJECT

Length & Area & Weight per piece						
Z16-BR022	L60*6	S235JR	2	1060.6	0.26	5.7
Mark	Profile	Grade	QTY	Length	Area	Weight

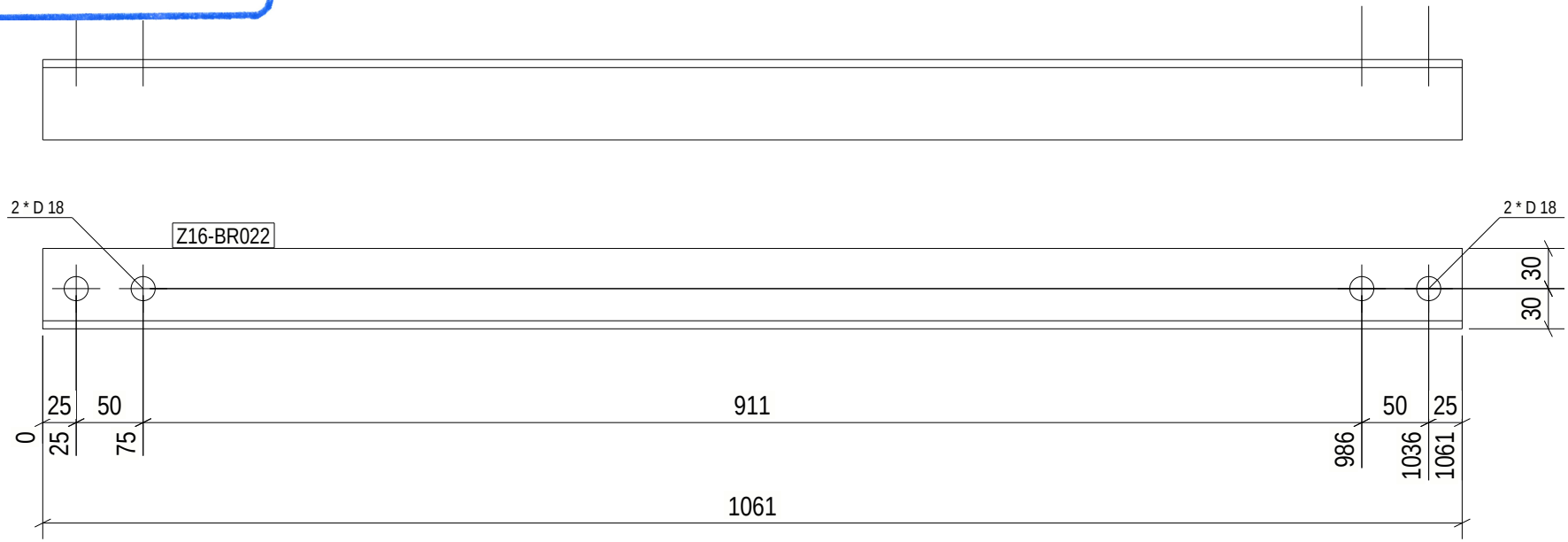

2 REQ'D AS DRAWN MK'D Z16-BR022

6 October Monorail
Engineering Unit
Valid For Construction

GENERAL NOTES:

1. THE DIMENSIONS SHOWN ARE NOMINAL (IN MILLIMETERS), U.N.O.
2. WELD SIZESHALL BE AISC MINIMUM OF 6 mm UNLESS NOTED OTHERWISE.
3. ALL FIELD WELDS SHALL BE INSPECTED PER QUALITY ASSURANCE AND SPECIAL INSPECTIONS.

REFERENCE DRAWINGS

1	93M-BOA-NAT-LOT-04833
2	93M-BOA-NAT-LOT-09170
3	93M-BOA-NAT-LOT-01976
4	93M-BOA-NAT-LOT-20021
5	
6	
7	
8	
9	

6TH OF OCTOBER CITY RAIL TRANSIT MONORAIL

The Authority | Hill International Consultant | Main Contractor | Structural Designer

KEY PLAN:

SCALE: AS SHOWN | SHOP DRAWING | DATE: 08/29/2023

DRAWING TITLE: 6TH OF OCTOBER MONORAIL SERVICE WALKWAYS ZONE(1016) Z16-BR022

REV	DATE	DSG	CHK	APP	AMENDMENTS	STATUS
B	08/29/2023	MAH	MAH	DRAW	ISSUED FOR INFORMATION	IFI
A	08/11/2022	MAH	MAH	DRAW	ISSUED FOR INFORMATION	IFI

Project Code	Rubric	Initiator	Lot	Ref	Number	Revision
9 3 M	0 4 7 6	A C C	6 0 D E P	D W G	1 6 2 6 1	B

Tekla structures

Approval is subject to approval of coordination package between multi-discipline.

REVIEWED WITH COMMENT
MONORAILS PROJECT

Length & Area & Weight per piece						
Z16-BR021	L60*6	S235JR	2	1060.6	0.26	5.7
Mark	Profile	Grade	QTY	Length	Area	Weight

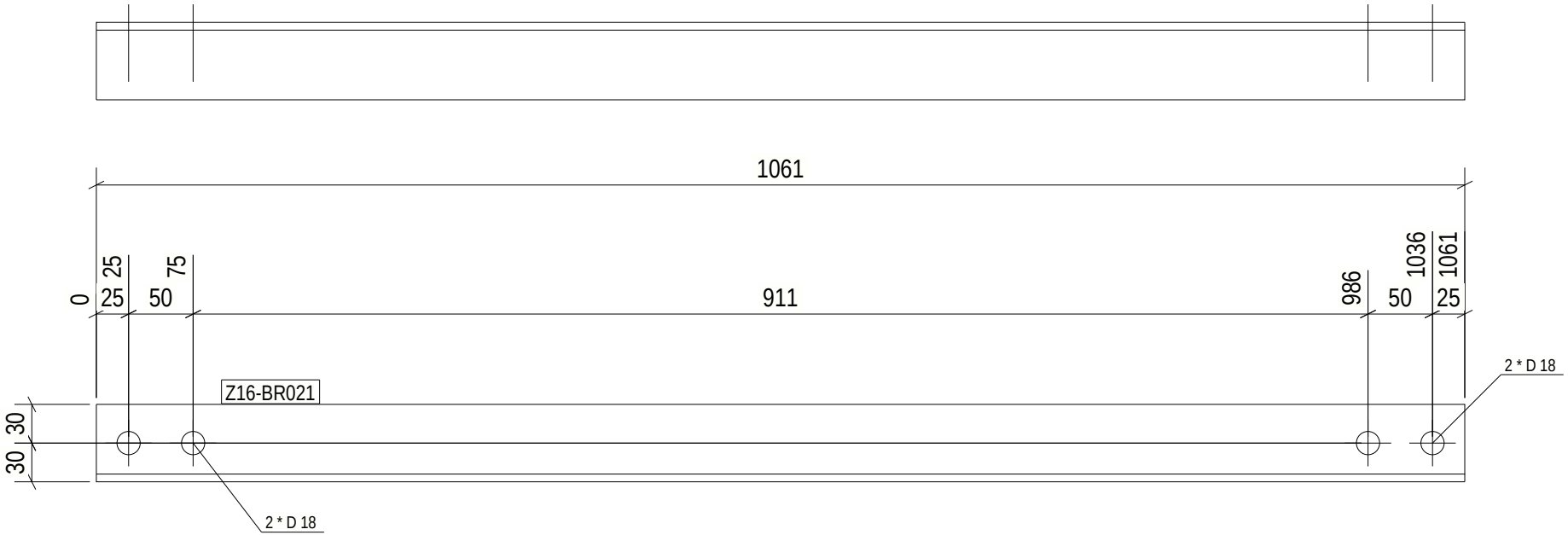

2 REQ'D AS DRAWN MK'D Z16-BR021

6 October Monorail
Engineering Unit
Valid For Construction

GENERAL NOTES:

1. THE DIMENSIONS SHOWN ARE NOMINAL (IN MILLIMETERS), U.N.O.
2. WELD SIZESHALL BE AISC MINIMUM OF 6 mm UNLESS NOTED OTHERWISE.
3. ALL FIELD WELDS SHALL BE INSPECTED PER QUALITY ASSURANCE AND SPECIAL INSPECTIONS.

REFERENCE DRAWINGS

1	93M-BOA-NAT-LOT-04833
2	93M-BOA-NAT-LOT-09170
3	93M-BOA-NAT-LOT-01976
4	93M-BOA-NAT-LOT-20021
5	
6	
7	
8	
9	

6TH OF OCTOBER CITY RAIL TRANSIT MONORAIL

The Authority | Hill International Consultant | Main Contractor | Structural Designer

KEY PLAN:

SCALE: AS SHOWN | SHOP DRAWING | DATE: 08/29/2023

DRAWING TITLE: 6TH OF OCTOBER MONORAIL SERVICE WALKWAYS ZONE(1016) Z16-BR021

REV	DATE	DSG	CHK	APP	AMENDMENTS	STATUS
B	08/29/2023	MAH	MAH	DRAW	ISSUED FOR INFORMATION	IFI
A	08/11/2022	MAH	MAH	DRAW	ISSUED FOR INFORMATION	IFI

Project Code	Rubric	Initiator	Lot	Ref	Number	Revision
9 3 M	0 4 7 6	A C C	6 0 D E P	D W G	1 6 2 6 2	B

Tekla structures

Approval is subject to approval of coordination package between multi-discipline.

REVIEWED WITH COMMENT
MONORAILS PROJECT

Length & Area & Weight per piece						
Z16-BR017	L80*8	S235JR	1	2822.8	0.91	26.9
Mark	Profile	Grade	QTY	Length	Area	Weight

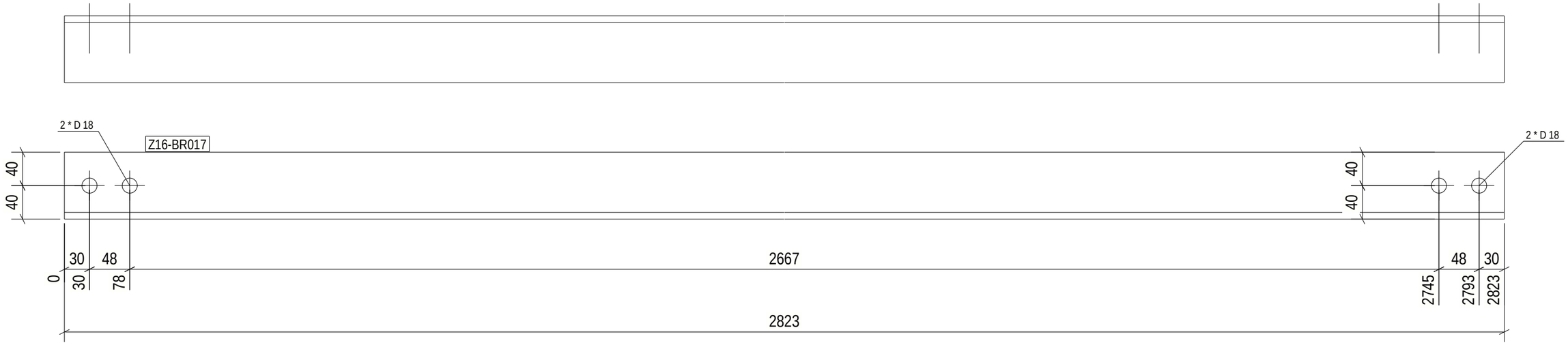

1 REQ'D AS DRAWN MK'D Z16-BR017

6 October Monorail
Engineering Unit
Valid For Construction

GENERAL NOTES:

1. THE DIMENSIONS SHOWN ARE NOMINAL (IN MILLIMETERS), U.N.O.
2. WELD SIZESHALL BE AISC MINIMUM OF 6 mm UNLESS NOTED OTHERWISE.
3. ALL FIELD WELDS SHALL BE INSPECTED PER QUALITY ASSURANCE AND SPECIAL INSPECTIONS.

REFERENCE DRAWINGS

1	93M-BOA-NAT-LOT-04833
2	93M-BOA-NAT-LOT-09170
3	93M-BOA-NAT-LOT-01976
4	93M-BOA-NAT-LOT-20021
5	
6	
7	
8	
9	

6TH OF OCTOBER CITY RAIL TRANSIT MONORAIL

The Authority | Hill International Consultant | ORASCOM CONSTRUCTION / BOMBARDIER Main Contractor | INNOVA TRANSPORTATION Structural Designer

KEY PLAN:

SCALE	SHOPDRAWING	DATE
AS SHOWN		09/29/2023

REV	DATE	DSG.	CHK.	APP.	AMENDMENTS	STATUS
B	08/29/2023	M.KH	M.KH	DR.M.M	ISSUED FOR INFORMATION	IFI
A	09/21/2022	M.KH	M.KH	DR.M.M	ISSUED FOR INFORMATION	IFI

DRAWING TITLE

6TH OF OCTOBER MONORAIL
SERVICE WALKWAYS
ZONE(1016)
Z16-BR017

Project Code	Rubric	Initiator	Lot	Ref	Number	Revision
93M	0476	ACC60DEP	DWG	1626	3	B

Tekla structures

Approval is subject to approval of coordination package between multi-discipline.

REVIEWED WITH COMMENT
MONORAILS PROJECT

Length & Area & Weight per piece						
Z16-BR016	L80*8	S235JR	1	2837.1	0.91	27.1
Mark	Profile	Grade	QTY	Length	Area	Weight

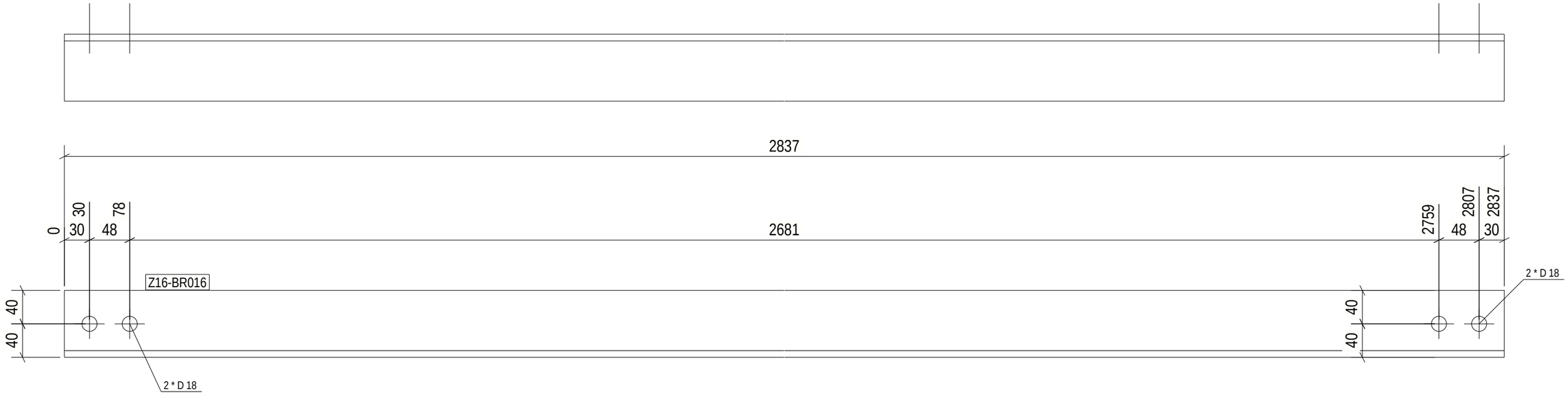

1 REQ'D AS DRAWN MK'D Z16-BR016

6 October: Monorail
Engineering Unit
Valid For Construction

GENERAL NOTES:

1. THE DIMENSIONS SHOWN ARE NOMINAL (IN MILLIMETERS), U.N.O.
2. WELD SIZESHALL BE AISC MINIMUM OF 6 mm UNLESS NOTED OTHERWISE.
3. ALL FIELD WELDS SHALL BE INSPECTED PER QUALITY ASSURANCE AND SPECIAL INSPECTIONS.

REFERENCE DRAWINGS

1	93M-BOA-NAT-LOT-04833
2	93M-BOA-NAT-LOT-09170
3	93M-BOA-NAT-LOT-01976
4	93M-BOA-NAT-LOT-20021
5	
6	
7	
8	
9	

6TH OF OCTOBER CITY RAIL TRANSIT MONORAIL

The Authority | Hill International (Consultant) | ORASCOM CONSTRUCTION / BOMBARDIER (Main Contractor) | INNOVA TRANSPORTATION (Structural Designer)

KEY PLAN:

SCALE: AS SHOWN | SHOPDRAWING | DATE: 09/29/2023

REV	DATE	DSG.	CHK.	APP.	AMENDMENTS	STATUS
B	08/29/2023	M.KH	M.KH	DR.M.M	ISSUED FOR INFORMATION	IFI
A	09/21/2022	M.KH	M.KH	DR.M.M	ISSUED FOR INFORMATION	IFI

DRAWING TITLE

6TH OF OCTOBER MONORAIL
SERVICE WALKWAYS
ZONE(1016)
Z16-BR016

Project Code	Rubric	Initiator	Lot	Ref	Number	Revision
93M	047	ACC	60DEP	DWG	16264	B

Tekla structures

Approval is subject to approval of coordination package between multi-discipline.

REVIEWED WITH COMMENT
MONORAILS PROJECT

Length & Area & Weight per piece						
Z16-BR015	L80*8	S235JR	1	3460.3	1.11	33.0
Mark	Profile	Grade	QTY	Length	Area	Weight

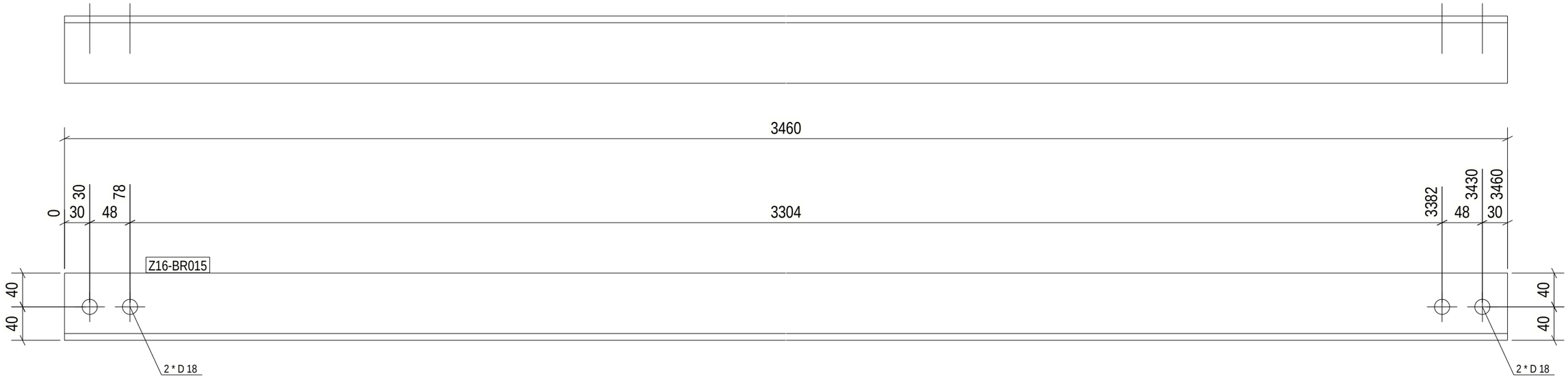

1 REQ'D AS DRAWN MK'D Z16-BR015

6 October: Monorail
Engineering Unit
Valid For Construction

GENERAL NOTES:

1. THE DIMENSIONS SHOWN ARE NOMINAL (IN MILLIMETERS), U.N.O.
2. WELD SIZESHALL BE AISC MINIMUM OF 6 mm UNLESS NOTED OTHERWISE.
3. ALL FIELD WELDS SHALL BE INSPECTED PER QUALITY ASSURANCE AND SPECIAL INSPECTIONS.

REFERENCE DRAWINGS

1	93M-BOA-NAT-LOT-04833
2	93M-BOA-NAT-LOT-09170
3	93M-BOA-NAT-LOT-01976
4	93M-BOA-NAT-LOT-20021
5	
6	
7	
8	
9	

6TH OF OCTOBER CITY RAIL TRANSIT MONORAIL

The Authority | Hill International (Consultant) | ORASCOM CONSTRUCTION / BOMBARDIER (Main Contractor) | INNOVA TRANSPORTATION (Structural Designer)

KEY PLAN:

SCALE	SHOPDRAWING	DATE
AS SHOWN		09/29/2023

REV	DATE	DSG.	CHK.	APP.	AMENDMENTS	STATUS
B	08/29/2023	M.KH	M.KH	DR.M.M	ISSUED FOR INFORMATION	IFI
A	09/21/2022	M.KH	M.KH	DR.M.M	ISSUED FOR INFORMATION	IFI

DRAWING TITLE

6TH OF OCTOBER MONORAIL
SERVICE WALKWAYS
ZONE(1016)
Z16-BR015

Project Code	Rubric	Initiator	Lot	Ref	Number	Revision
9 3 M	0 4 7 6	A C C	6 0 D E P	D W G	1 6 2 6 5	B

Tekla structures

Approval is subject to approval of coordination package between multi-discipline.

REVIEWED WITH COMMENT
MONORAILS PROJECT

Length & Area & Weight per piece						
Z16-BR014	L80*8	S235JR	1	3460.6	1.11	33.0
Mark	Profile	Grade	QTY	Length	Area	Weight

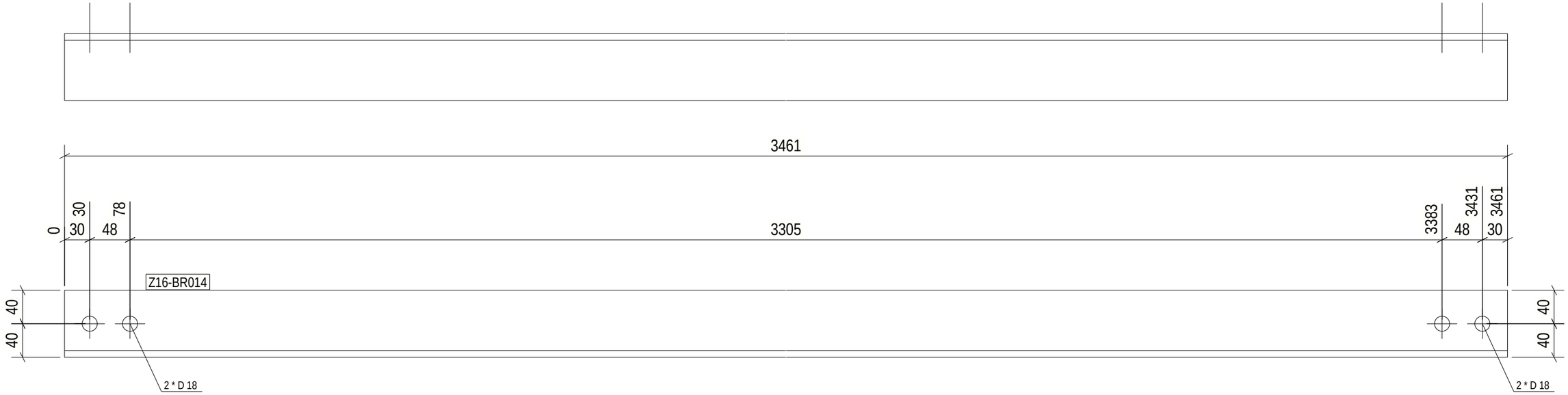

1 REQ'D AS DRAWN MK'D Z16-BR014

6 October Monorail
Engineering Unit
Valid For Construction

GENERAL NOTES:

1. THE DIMENSIONS SHOWN ARE NOMINAL (IN MILLIMETERS), U.N.O.
2. WELD SIZESHALL BE AISC MINIMUM OF 6 mm UNLESS NOTED OTHERWISE.
3. ALL FIELD WELDS SHALL BE INSPECTED PER QUALITY ASSURANCE AND SPECIAL INSPECTIONS.

REFERENCE DRAWINGS

1	93M-BOA-NAT-LOT-04833
2	93M-BOA-NAT-LOT-09170
3	93M-BOA-NAT-LOT-01976
4	93M-BOA-NAT-LOT-20021
5	
6	
7	
8	
9	

6TH OF OCTOBER CITY RAIL TRANSIT MONORAIL

The Authority | Hill International (Consultant) | ORASCOM CONSTRUCTION / BOMBARDIER (Main Contractor) | INNOVA TRANSPORTATION (Structural Designer)

KEY PLAN:

REV	DATE	DSG.	CHK.	APP.	AMENDMENTS	STATUS
B	08/29/2023	M.KH	M.KH	DR.M.M	ISSUED FOR INFORMATION	IFI
A	09/21/2022	M.KH	M.KH	DR.M.M	ISSUED FOR INFORMATION	IFI

SCALE: AS SHOWN | SHOPDRAWING | DATE: 09/29/2023

DRAWING TITLE
6TH OF OCTOBER MONORAIL
SERVICE WALKWAYS
ZONE(1016)
Z16-BR014

Project Code	Rubric	Initiator	Lot	Ref	Number	Revision
9 3 M	0 4 7 6	A C C	6 0 D E P	D W G	1 6 2 6 6	B

Tekla structures

Approval is subject to approval of coordination package between multi-discipline.

REVIEWED WITH COMMENT
MONORAILS PROJECT

Length & Area & Weight per piece						
Z16-BR013	L80*8	S235JR	2	3462.4	1.11	33.1
Mark	Profile	Grade	QTY	Length	Area	Weight

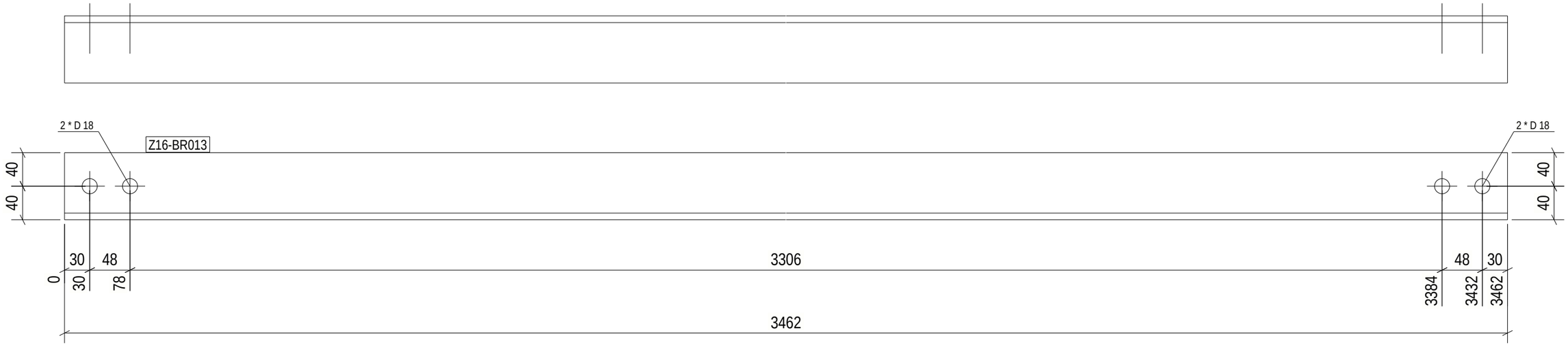

2 REQ'D AS DRAWN MK'D Z16-BR013

6 October Monorail
Engineering Unit
Valid For Construction

GENERAL NOTES:

1. THE DIMENSIONS SHOWN ARE NOMINAL (IN MILLIMETERS), U.N.O.
2. WELD SIZESHALL BE AISC MINIMUM OF 6 mm UNLESS NOTED OTHERWISE.
3. ALL FIELD WELDS SHALL BE INSPECTED PER QUALITY ASSURANCE AND SPECIAL INSPECTIONS.

REFERENCE DRAWINGS

1	93M-BOA-NAT-LOT-04833
2	93M-BOA-NAT-LOT-09170
3	93M-BOA-NAT-LOT-01976
4	93M-BOA-NAT-LOT-20021
5	
6	
7	
8	
9	

6TH OF OCTOBER CITY RAIL TRANSIT MONORAIL

The Authority | Hill International Consultant | Main Contractor | Structural Designer

KEY PLAN:

SCALE: AS SHOWN | SHOPDRAWING | DATE: 09/29/2023

REV	DATE	DSG.	CHK.	APP.	AMENDMENTS	STATUS
B	08/29/2023	M.KH	M.KH	DR.M.M	ISSUED FOR INFORMATION	IFI
A	09/21/2022	M.KH	M.KH	DR.M.M	ISSUED FOR INFORMATION	IFI

DRAWING TITLE

6TH OF OCTOBER MONORAIL
SERVICE WALKWAYS
ZONE(1016)
Z16-BR013

Project Code	Rubric	Initiator	Lot	Ref	Number	Revision
93M	0476	ACC60DEP	DWG	16267		B

Tekla structures

Approval is subject to approval of coordination package between multi-discipline.

REVIEWED WITH COMMENT
MONORAILS PROJECT

Length & Area & Weight per piece						
Z16-BR012	L80*8	S235JR	1	3462.4	1.11	33.1
Mark	Profile	Grade	QTY	Length	Area	Weight

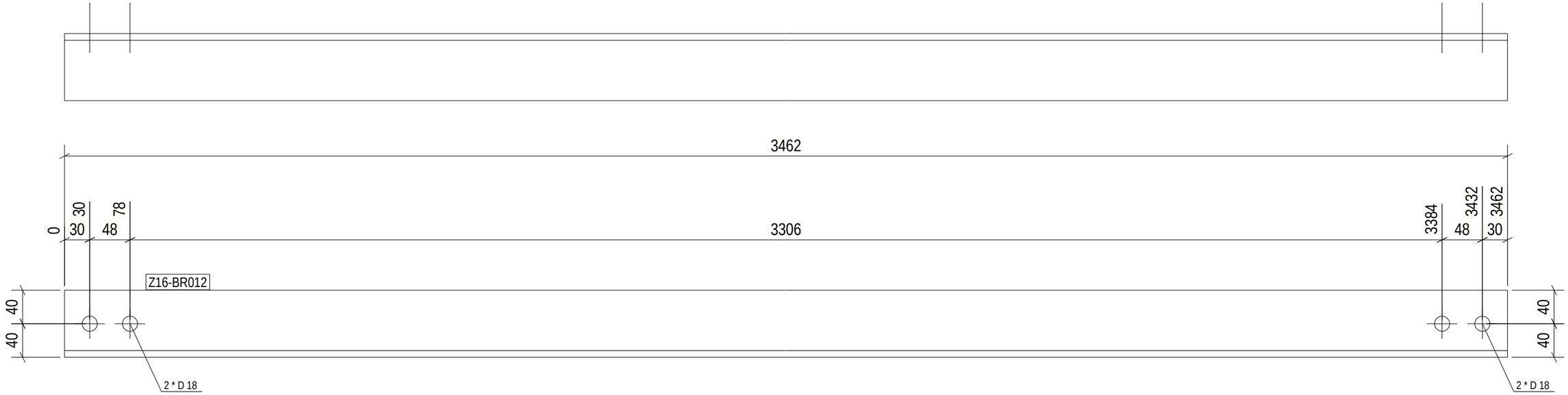

1 REQ'D AS DRAWN MK'D Z16-BR012

6 October Monorail
Engineering Unit
Valid For Construction

GENERAL NOTES:

1. THE DIMENSIONS SHOWN ARE NOMINAL (IN MILLIMETERS), U.N.O.
2. WELD SIZESHALL BE AISC MINIMUM OF 6 mm UNLESS NOTED OTHERWISE.
3. ALL FIELD WELDS SHALL BE INSPECTED PER QUALITY ASSURANCE AND SPECIAL INSPECTIONS.

REFERENCE DRAWINGS

1	93M-BOA-NAT-LOT-04833
2	93M-BOA-NAT-LOT-09170
3	93M-BOA-NAT-LOT-01976
4	93M-BOA-NAT-LOT-20021
5	
6	
7	
8	
9	

6TH OF OCTOBER CITY RAIL TRANSIT MONORAIL

The Authority | Hill International (Consultant) | ORASCOM CONSTRUCTION / BOMBARDIER (Main Contractor) | INNOVA TRANSPORTATION (Structural Designer)

KEY PLAN:

SCALE: AS SHOWN | SHOPDRAWING | DATE: 09/29/2023

REV	DATE	DSG.	CHK.	APP.	AMENDMENTS	STATUS
B	08/29/2023	M.KH	M.KH	DR.M.M	ISSUED FOR INFORMATION	IFI
A	09/21/2022	M.KH	M.KH	DR.M.M	ISSUED FOR INFORMATION	IFI

DRAWING TITLE

6TH OF OCTOBER MONORAIL
SERVICE WALKWAYS
ZONE(1016)
Z16-BR012

Project Code	Rubric	Initiator	Lot	Ref	Number	Revision
93M	0476	ACC60DEP	DWG	16268		B

Tekla structures

Approval is subject to approval of coordination package between multi-discipline.

REVIEWED WITH COMMENT
MONORAILS PROJECT

Length & Area & Weight per piece						
Z16-BR011	L80*8	S235JR	1	3453.0	1.11	33.0
Mark	Profile	Grade	QTY	Length	Area	Weight

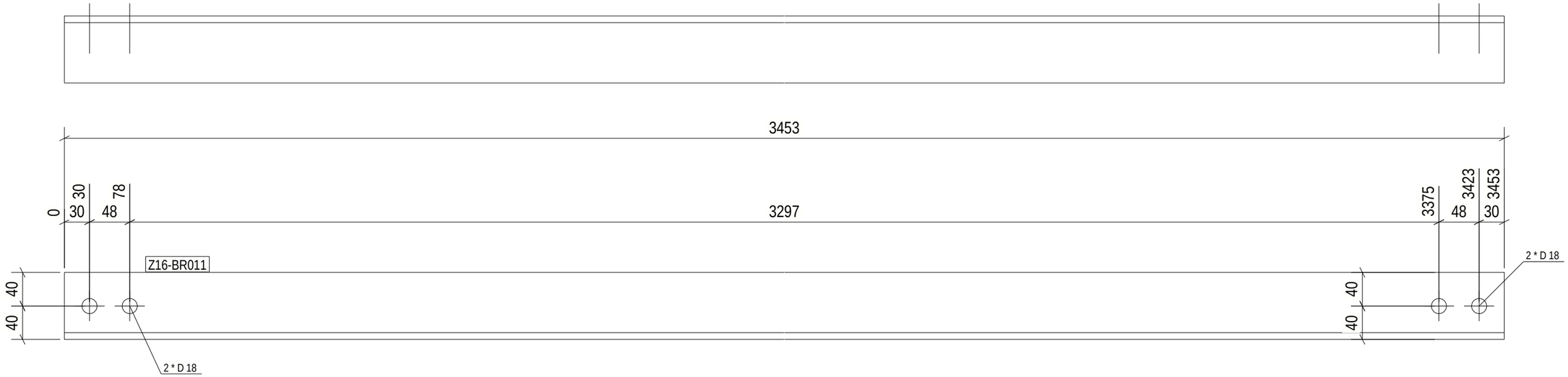

1 REQ'D AS DRAWN MK'D Z16-BR011

6 October Monorail
Engineering Unit
Valid For Construction

GENERAL NOTES:

1. THE DIMENSIONS SHOWN ARE NOMINAL (IN MILLIMETERS), U.N.O.
2. WELD SIZESHALL BE AISC MINIMUM OF 6 mm UNLESS NOTED OTHERWISE.
3. ALL FIELD WELDS SHALL BE INSPECTED PER QUALITY ASSURANCE AND SPECIAL INSPECTIONS.

REFERENCE DRAWINGS

1	93M-BOA-NAT-LOT-04833
2	93M-BOA-NAT-LOT-09170
3	93M-BOA-NAT-LOT-01976
4	93M-BOA-NAT-LOT-20021
5	
6	
7	
8	
9	

6TH OF OCTOBER CITY RAIL TRANSIT MONORAIL

The Authority | Hill International (Consultant) | ORASCOM CONSTRUCTION / BOMBARDIER (Main Contractor) | INNOVA TRANSPORTATION (Structural Designer)

KEY PLAN:

SCALE: AS SHOWN | SHOPDRAWING | DATE: 09/29/2023

REV	DATE	DSG.	CHK.	APP.	AMENDMENTS	STATUS
B	08/29/2023	M.KH	M.KH	DR.M.M	ISSUED FOR INFORMATION	IFI
A	09/21/2022	M.KH	M.KH	DR.M.M	ISSUED FOR INFORMATION	IFI

DRAWING TITLE

6TH OF OCTOBER MONORAIL
SERVICE WALKWAYS
ZONE(1016)
Z16-BR011

Project Code	Rubric	Initiator	Lot	Ref	Number	Revision
93M	0476	ACC60DEP	DWG	16269		B

Tekla structures

Approval is subject to approval of coordination package between multi-discipline.

REVIEWED WITH COMMENT
MONORAILS PROJECT

Length & Area & Weight per piece						
Z16-BR010	L80*8	S235JR	1	3447.0	1.11	32.9
Mark	Profile	Grade	QTY	Length	Area	Weight

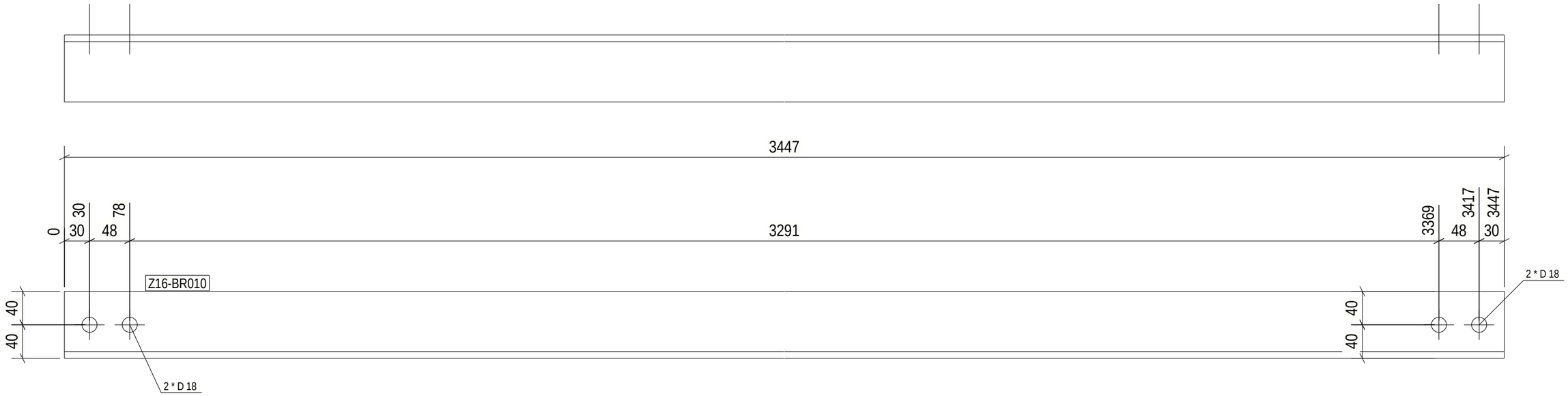

1 REQ'D AS DRAWN MK'D Z16-BR010

6 October: Monorail
Engineering Unit
Valid For Construction

GENERAL NOTES:

1. THE DIMENSIONS SHOWN ARE NOMINAL (IN MILLIMETERS), U.N.O.
2. WELD SIZESHALL BE AISC MINIMUM OF 6 mm UNLESS NOTED OTHERWISE.
3. ALL FIELD WELDS SHALL BE INSPECTED PER QUALITY ASSURANCE AND SPECIAL INSPECTIONS.

REFERENCE DRAWINGS

1	93M-BOA-NAT-LOT-04833
2	93M-BOA-NAT-LOT-09170
3	93M-BOA-NAT-LOT-01976
4	93M-BOA-NAT-LOT-20021
5	
6	
7	
8	
9	

6TH OF OCTOBER CITY RAIL TRANSIT MONORAIL

The Authority | Hill International Consultant | Main Contractor | Structural Designer

KEY PLAN:

SCALE: AS SHOWN | SHOPDRAWING | DATE: 09/29/2023

REV	DATE	DSG.	CHK.	APP.	AMENDMENTS	STATUS
B	08/29/2023	M.KH	M.KH	DR.M.M	ISSUED FOR INFORMATION	IFI
A	09/21/2022	M.KH	M.KH	DR.M.M	ISSUED FOR INFORMATION	IFI

DRAWING TITLE

6TH OF OCTOBER MONORAIL
SERVICE WALKWAYS
ZONE(1016)
Z16-BR010

Project Code	Rubric	Initiator	Lot	Ref	Number	Revision
93M	0476	ACC60DEP	DWG	16270		B

Tekla structures

Approval is subject to approval of coordination package between multi-discipline.

REVIEWED WITH COMMENT
MONORAILS PROJECT

Length & Area & Weight per piece						
Z16-BR009	L80*8	S235JR	1	3497.1	1.12	33.4
Mark	Profile	Grade	QTY	Length	Area	Weight

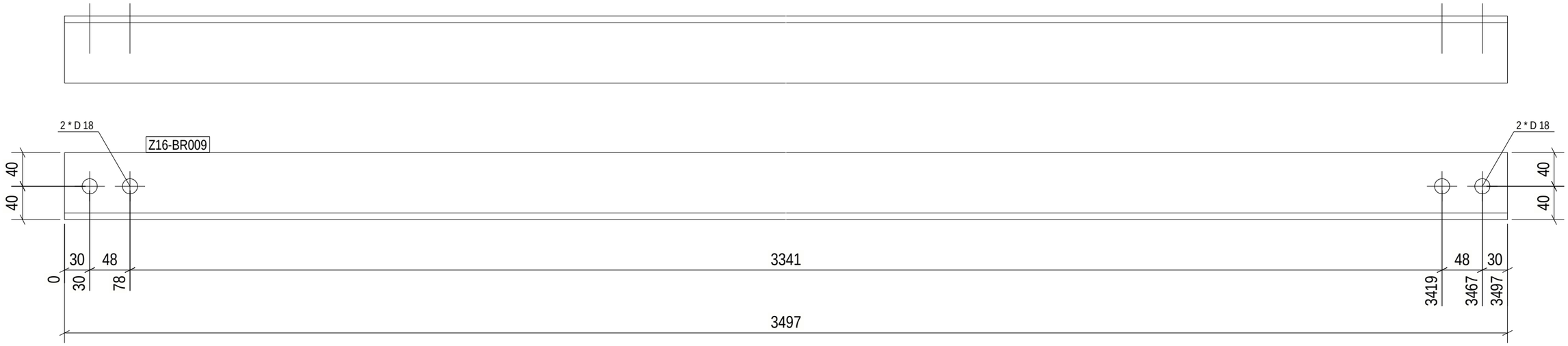

1 REQ'D AS DRAWN MK'D Z16-BR009

6 October Monorail
Engineering Unit
Valid For Construction

GENERAL NOTES:

1. THE DIMENSIONS SHOWN ARE NOMINAL (IN MILLIMETERS), U.N.O.
2. WELD SIZESHALL BE AISC MINIMUM OF 6 mm UNLESS NOTED OTHERWISE.
3. ALL FIELD WELDS SHALL BE INSPECTED PER QUALITY ASSURANCE AND SPECIAL INSPECTIONS.

REFERENCE DRAWINGS

1	93M-BOA-NAT-LOT-04833
2	93M-BOA-NAT-LOT-09170
3	93M-BOA-NAT-LOT-01976
4	93M-BOA-NAT-LOT-20021
5	
6	
7	
8	
9	

6TH OF OCTOBER CITY RAIL TRANSIT MONORAIL

The Authority | Hill International Consultant | ORASCOM CONSTRUCTION / BOMBARDIER Main Contractor | INNOVA TRANSPORTATION Structural Designer

KEY PLAN:

SCALE	SHOPDRAWING	DATE
AS SHOWN		09/29/2023

REV	DATE	DSG.	CHK.	APP.	AMENDMENTS	STATUS
B	08/29/2023	M.KH	M.KH	DR.M.M	ISSUED FOR INFORMATION	IFI
A	09/21/2022	M.KH	M.KH	DR.M.M	ISSUED FOR INFORMATION	IFI

DRAWING TITLE

6TH OF OCTOBER MONORAIL
SERVICE WALKWAYS
ZONE(1016)
Z16-BR009

Project Code	Rubric	Initiator	Lot	Ref	Number	Revision
9 3 M	0 4 7 6	A C C	6 0 D E P	D W G	1 6 2 7 1	B

Tekla structures

Approval is subject to approval of coordination package between multi-discipline.

REVIEWED WITH COMMENT
MONORAILS PROJECT

Length & Area & Weight per piece						
Z16-BR008	L80*8	S235JR	1	3463.7	1.11	33.1
Mark	Profile	Grade	QTY	Length	Area	Weight

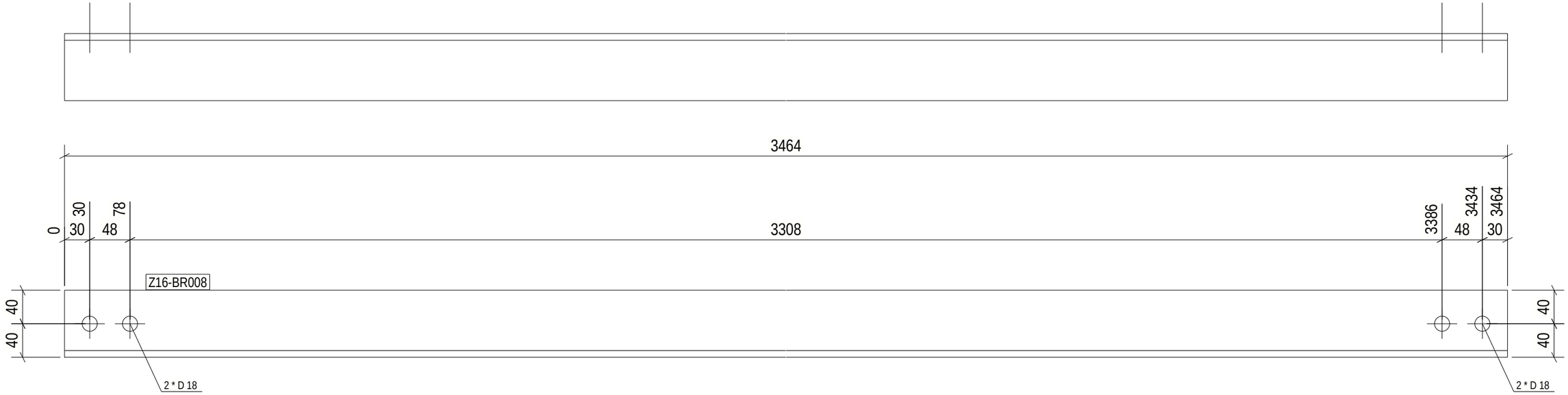

1 REQ'D AS DRAWN MK'D Z16-BR008

GENERAL NOTES:

1. THE DIMENSIONS SHOWN ARE NOMINAL (IN MILLIMETERS), U.N.O.
2. WELD SIZESHALL BE AISC MINIMUM OF 6 mm UNLESS NOTED OTHERWISE.
3. ALL FIELD WELDS SHALL BE INSPECTED PER QUALITY ASSURANCE AND SPECIAL INSPECTIONS.

REFERENCE DRAWINGS

1	93M-BOA-NAT-LOT-04833
2	93M-BOA-NAT-LOT-09170
3	93M-BOA-NAT-LOT-01976
4	93M-BOA-NAT-LOT-20021
5	
6	
7	
8	
9	

6TH OF OCTOBER CITY RAIL TRANSIT MONORAIL

The Authority | Consultant: Hill International | Main Contractor: ORASCOM CONSTRUCTION, BOMBARDIER | Structural Designer: INNOVA TRANSPORTATION

KEY PLAN:

6 October Monorail
Engineering Unit
Valid For Construction

SCALE: AS SHOWN | SHOPDRAWING | DATE: 09/29/2023

REV	DATE	DSG.	CHK.	APP.	AMENDMENTS	STATUS
B	08/29/2023	M.KH	M.KH	DR.M.M	ISSUED FOR INFORMATION	IFI
A	09/21/2022	M.KH	M.KH	DR.M.M	ISSUED FOR INFORMATION	IFI

DRAWING TITLE
6TH OF OCTOBER MONORAIL
SERVICE WALKWAYS
ZONE(1016)
Z16-BR008

Project Code	Rubric	Initiator	Lot	Ref	Number	Revision
93M	0476	ACC60DEP	DWG	1627		B

Tekla structures

Approval is subject to approval of coordination package between multi-discipline.

REVIEWED WITH COMMENT
MONORAILS PROJECT

Length & Area & Weight per piece						
W874	CHS48.3*4.0	S235JR	3	75.4	0.01	0.3
Mark	Profile	Grade	QTY	Length	Area	Weight

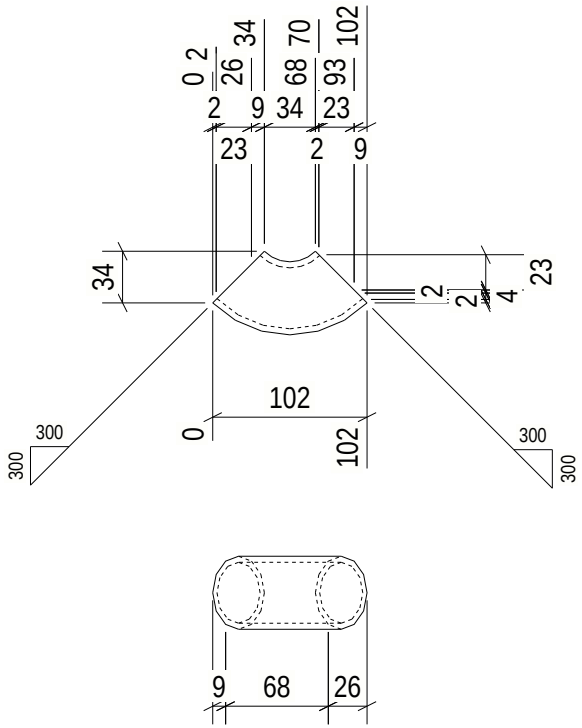

3 REQ'D AS DRAWN MK'D W874

6 October Monorail
Engineering Unit
Valid For Construction

GENERAL NOTES:

1. THE DIMENSIONS SHOWN ARE NOMINAL (IN MILLIMETERS), U.N.O.
2. WELD SIZESHALL BE AISC MINIMUM OF 6 mm UNLESS NOTED OTHERWISE.
3. ALL FIELD WELDS SHALL BE INSPECTED PER QUALITY ASSURANCE AND SPECIAL INSPECTIONS.

REFERENCE DRAWINGS

1	93M-BOA-NAT-LOT-04833
2	93M-BOA-NAT-LOT-09170
3	93M-BOA-NAT-LOT-01976
4	93M-BOA-NAT-LOT-20021
5	
6	
7	
8	
9	

6TH OF OCTOBER CITY RAIL TRANSIT MONORAIL

The Authority | Hill International Consultant | Main Contractor | Structural Designer

KEY PLAN:

SCALE	SHOP DRAWING	DATE
AS SHOWN		08/29/2023

DRAWING TITLE
6TH OF OCTOBER MONORAIL
SERVICE WALKWAYS
ZONE(1016)
W874

REV	DATE	DSG	CHK	APP	AMENDMENTS	STATUS
B	08/29/2023	MAH	MAH	DRAW	ISSUED FOR INFORMATION	IFI
A	08/11/2022	MAH	MAH	DRAW	ISSUED FOR INFORMATION	IFI

Project Code	Rubric	Initiator	Lot	Ref	Number	Revision
9 3 M	0 4 7 6	A C C	6 0 D E P	D W G	1 6 2 7 3	B

Tekla structures

Approval is subject to approval of coordination package between multi-discipline.

REVIEWED WITH COMMENT
MONORAILS PROJECT

Length & Area & Weight per piece						
W873	CHS48.3*4.0	S235JR	4	22.0	0.00	0.1
Mark	Profile	Grade	QTY	Length	Area	Weight

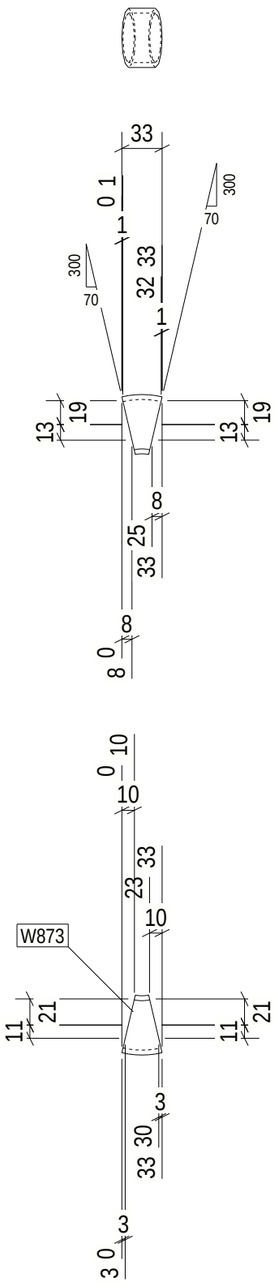

4 REQ'D AS DRAWN MK'D W873

6TH OF OCTOBER CITY RAIL TRANSIT MONORAIL

The Authority | Consultant: Hill International | Main Contractor: ORASCOM CONSTRUCTION / BOMBARDIER | Structural Designer: INNOVA TRANSPORTATION

KEY PLAN:

6 October Monorail
Engineering Unit
Valid For Construction

GENERAL NOTES:

1. THE DIMENSIONS SHOWN ARE NOMINAL (IN MILLIMETERS), U.N.O.
2. WELD SIZESHALL BE AISC MINIMUM OF 6 mm UNLESS NOTED OTHERWISE.
3. ALL FIELD WELDS SHALL BE INSPECTED PER QUALITY ASSURANCE AND SPECIAL INSPECTIONS.

REFERENCE DRAWINGS

1	93M-BOA-NAT-LOT-04833
2	93M-BOA-NAT-LOT-09170
3	93M-BOA-NAT-LOT-01976
4	93M-BOA-NAT-LOT-20021
5	
6	
7	
8	
9	

SCALE	SHOPDRAWING	DATE
AS SHOWN		09/29/2023

REV	DATE	DSG.	CHK.	APP.	AMENDMENTS	STATUS
B	08/29/2023	M.KH	M.KH	DR.M.M	ISSUED FOR INFORMATION	IFI
A	09/21/2022	M.KH	M.KH	DR.M.M	ISSUED FOR INFORMATION	IFI

DRAWING TITLE

6TH OF OCTOBER MONORAIL
SERVICE WALKWAYS
ZONE(1016)
W873

Project Code	Rubric	Initiator	Lot	Ref	Number	Revision
93M	047	6ACC	60DEP	DWG	1627	B

Tekla structures

Approval is subject to approval of coordination package between multi-discipline.

REVIEWED WITH COMMENT
MONORAILS PROJECT

Length & Area & Weight per piece						
W872	PL12*80	S355JR	3	180.0	0.04	1.4
Mark	Profile	Grade	QTY	Length	Area	Weight

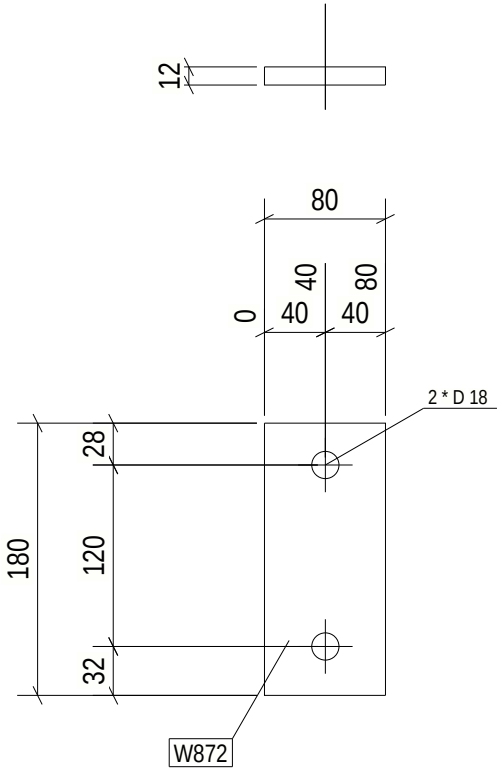

3 REQ'D AS DRAWN MK'D W872

6 October Monorail
Engineering Unit
Valid For Construction

GENERAL NOTES:

1. THE DIMENSIONS SHOWN ARE NOMINAL (IN MILLIMETERS), U.N.O.
2. WELD SIZESHALL BE AISC MINIMUM OF 6 mm UNLESS NOTED OTHERWISE.
3. ALL FIELD WELDS SHALL BE INSPECTED PER QUALITY ASSURANCE AND SPECIAL INSPECTIONS.

REFERENCE DRAWINGS

1	93M-BOA-NAT-LOT-04833
2	93M-BOA-NAT-LOT-09170
3	93M-BOA-NAT-LOT-01976
4	93M-BOA-NAT-LOT-20021
5	
6	
7	
8	
9	

6TH OF OCTOBER CITY RAIL TRANSIT MONORAIL

The Authority | Hill International Consultant | Main Contractor | Structural Designer

KEY PLAN:

SCALE: AS SHOWN | SHOP DRAWING | DATE: 08/29/2023

DRAWING TITLE: 6TH OF OCTOBER MONORAIL SERVICE WALKWAYS ZONE(1016) W872

REV	DATE	DSG	CHK	APP	AMENDMENTS	STATUS
B	08/29/2023	MAH	MAH	DRAW	ISSUED FOR INFORMATION	IFI
A	08/11/2022	MAH	MAH	DRAW	ISSUED FOR INFORMATION	IFI

Project Code	Rubric	Initiator	Lot	Ref	Number	Revision
9 3 M	0 4 7 6	A C C	6 0 D E P	D W G	1 6 2 7 5	B

Tekla structures

Approval is subject to approval of coordination package between multi-discipline.

REVIEWED WITH COMMENT
MONORAILS PROJECT

Length & Area & Weight per piece						
W871	CHS48.3*4.0	S235JR	12	64.2	0.01	0.3
Mark	Profile	Grade	QTY	Length	Area	Weight

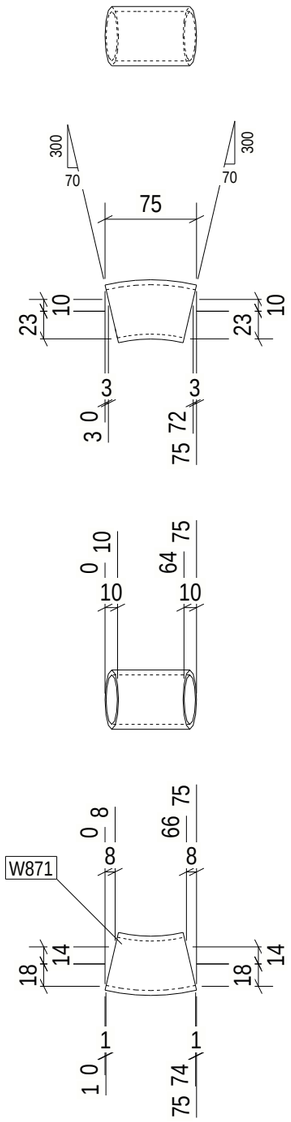

12 REQ'D AS DRAWN MK'D W871

6 October Monorail
Engineering Unit
Valid For Construction

GENERAL NOTES:

1. THE DIMENSIONS SHOWN ARE NOMINAL (IN MILLIMETERS), U.N.O.
2. WELD SIZESHALL BE AISC MINIMUM OF 6 mm UNLESS NOTED OTHERWISE.
3. ALL FIELD WELDS SHALL BE INSPECTED PER QUALITY ASSURANCE AND SPECIAL INSPECTIONS.

REFERENCE DRAWINGS

1	93M-BOA-NAT-LOT-04833
2	93M-BOA-NAT-LOT-09170
3	93M-BOA-NAT-LOT-01976
4	93M-BOA-NAT-LOT-20021
5	
6	
7	
8	
9	

6TH OF OCTOBER CITY RAIL TRANSIT MONORAIL

The Authority | Hill International Consultant | ORASCOM BOMBARDIER Main Contractor | INNOVA Structural Designer

KEY PLAN:

SCALE AS SHOWN | SHOPDRAWING | DATE 09/29/2023

REV	DATE	DSG.	CHK.	APP.	AMENDMENTS	STATUS
B	08/29/2023	M.KH	M.KH	DR.M.M	ISSUED FOR INFORMATION	IFI
A	09/21/2022	M.KH	M.KH	DR.M.M	ISSUED FOR INFORMATION	IFI

DRAWING TITLE
6TH OF OCTOBER MONORAIL
SERVICE WALKWAYS
ZONE(1016)
W871

Project Code	Rubric	Initiator	Lot	Ref	Number	Revision
9 3 M	0 4 7 6	A C C	6 0 D E P	D W G	1 6 2 7 6	B

Tekla structures

Approval is subject to approval of coordination package between multi-discipline.

REVIEWED WITH COMMENT MONORAILS PROJECT

Length & Area & Weight per piece						
W870	PL12*80	S355JR	5	180.0	0.04	1.4
Mark	Profile	Grade	QTY	Length	Area	Weight

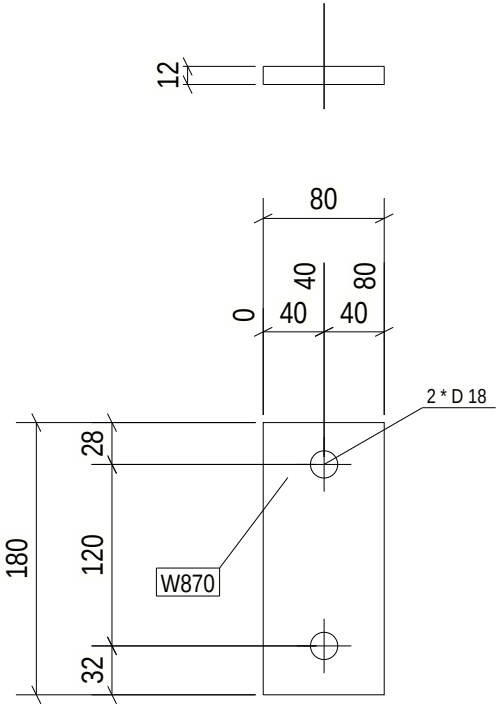

5 REQ'D AS DRAWN MK'D W870

6 October Monorail Engineering Unit Valid For Construction

GENERAL NOTES:

1. THE DIMENSIONS SHOWN ARE NOMINAL (IN MILLIMETERS), U.N.O.
2. WELD SIZESHALL BE AISC MINIMUM OF 6 mm UNLESS NOTED OTHERWISE.
3. ALL FIELD WELDS SHALL BE INSPECTED PER QUALITY ASSURANCE AND SPECIAL INSPECTIONS.

REFERENCE DRAWINGS

1	93M-BOA-NAT-LOT-04833
2	93M-BOA-NAT-LOT-09170
3	93M-BOA-NAT-LOT-01976
4	93M-BOA-NAT-LOT-20021
5	
6	
7	
8	
9	

6TH OF OCTOBER CITY RAIL TRANSIT MONORAIL

The Authority | Hill International Consultant | Main Contractor | Structural Designer

KEY PLAN:

SCALE	SHOP DRAWING	DATE
AS SHOWN		08/29/2023

DRAWING TITLE

6TH OF OCTOBER MONORAIL SERVICE WALKWAYS ZONE(1016)
W870

REV	DATE	DSG	CHK	APP	AMENDMENTS	STATUS
B	08/29/2023	MAH	MAH	DRAW	ISSUED FOR INFORMATION	IFI
A	08/11/2022	MAH	MAH	DRAW	ISSUED FOR INFORMATION	IFI

Project Code	Rubric	Initiator	Lot	Ref	Number	Revision
9 3 M	0 4 7 6	A C C	6 0 D E P	D W G	1 6 2 7 7	B

Tekla structures

Approval is subject to approval of coordination package between multi-discipline.

REVIEWED WITH COMMENT
MONORAILS PROJECT

Length & Area & Weight per piece						
W869	PL25*300	S355JR	12	300.0	0.21	17.7
Mark	Profile	Grade	QTY	Length	Area	Weight

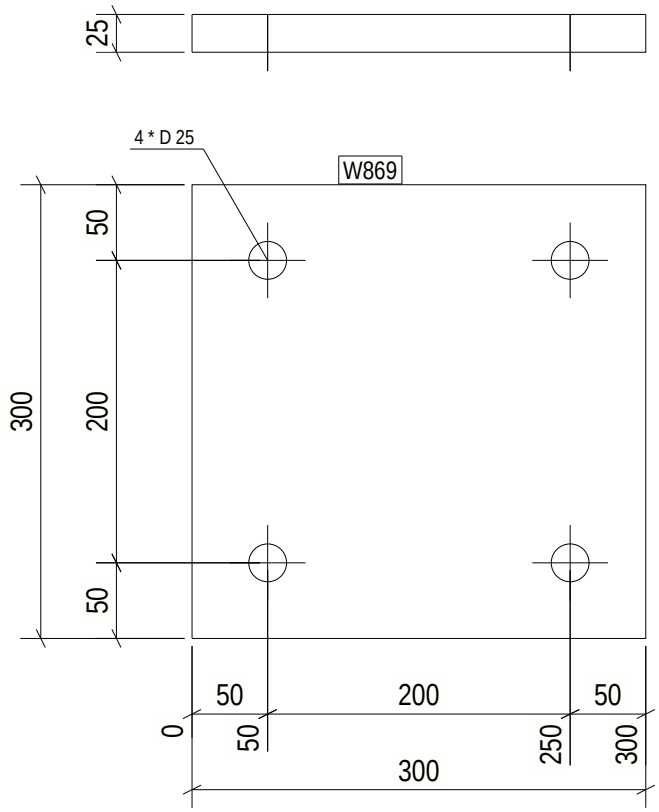

12 REQ'D AS DRAWN MK'D W869

6 October Monorail
Engineering Unit
Valid For Construction

GENERAL NOTES:

1. THE DIMENSIONS SHOWN ARE NOMINAL (IN MILLIMETERS), U.N.O.
2. WELD SIZESHALL BE AISC MINIMUM OF 6 mm UNLESS NOTED OTHERWISE.
3. ALL FIELD WELDS SHALL BE INSPECTED PER QUALITY ASSURANCE AND SPECIAL INSPECTIONS.

REFERENCE DRAWINGS

1	93M-BOA-NAT-LOT-04833
2	93M-BOA-NAT-LOT-09170
3	93M-BOA-NAT-LOT-01976
4	93M-BOA-NAT-LOT-20021
5	
6	
7	
8	
9	

6TH OF OCTOBER CITY RAIL TRANSIT MONORAIL

The Authority | Hill International Consultant | Main Contractor | Structural Designer

KEY PLAN:

SCALE: AS SHOWN | SHOP DRAWING | DATE: 08/29/2023

DRAWING TITLE: 6TH OF OCTOBER MONORAIL SERVICE WALKWAYS ZONE(1016) W869

REV	DATE	DSG	CHK	APP	AMENDMENTS	STATUS
B	08/29/2023	MAH	MAH	DRAW	ISSUED FOR INFORMATION	IFI
A	08/11/2022	MAH	MAH	DRAW	ISSUED FOR INFORMATION	IFI

Project Code	Rubric	Initiator	Lot	Ref	Number	Revision
9 3 M	0 4 7 6	A C C	6 0 D E P	D W G	1 6 2 7 8	B

Tekla structures

Approval is subject to approval of coordination package between multi-discipline.

REVIEWED WITH COMMENT
MONORAILS PROJECT

Length & Area & Weight per piece						
W868	PL8*113.4	S355JR	8	205.3	0.04	1.1
Mark	Profile	Grade	QTY	Length	Area	Weight

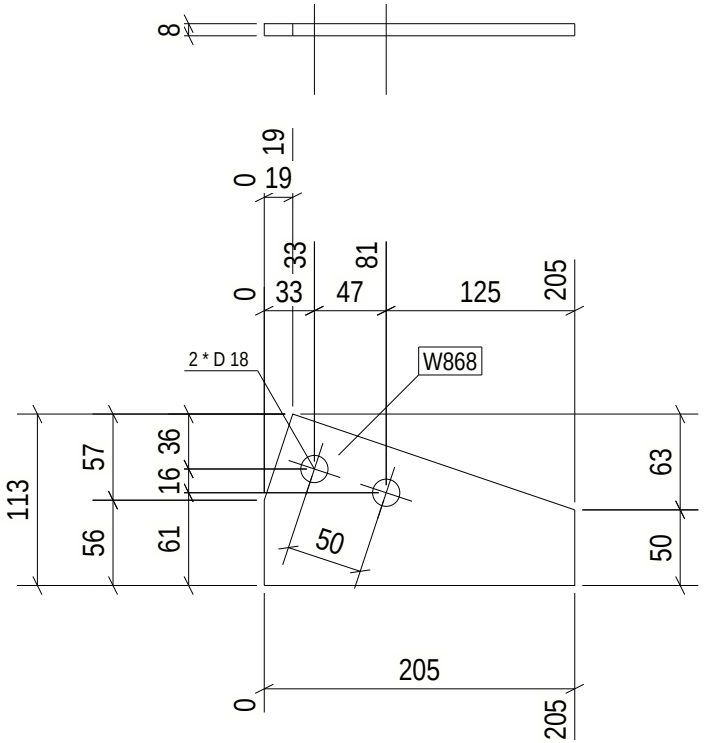

8 REQ'D AS DRAWN MK'D W868

6 October Monorail
Engineering Unit
Valid For Construction

GENERAL NOTES:

1. THE DIMENSIONS SHOWN ARE NOMINAL (IN MILLIMETERS), U.N.O.
2. WELD SIZESHALL BE AISC MINIMUM OF 6 mm UNLESS NOTED OTHERWISE.
3. ALL FIELD WELDS SHALL BE INSPECTED PER QUALITY ASSURANCE AND SPECIAL INSPECTIONS.

REFERENCE DRAWINGS

1	93M-BOA-NAT-LOT-04833
2	93M-BOA-NAT-LOT-09170
3	93M-BOA-NAT-LOT-01976
4	93M-BOA-NAT-LOT-20021
5	
6	
7	
8	
9	

6TH OF OCTOBER CITY RAIL TRANSIT MONORAIL

The Authority | Hill International Consultant | Main Contractor | Structural Designer

KEY PLAN:

SCALE: AS SHOWN | SHOP DRAWING | DATE: 08/29/2023

DRAWING TITLE: 6TH OF OCTOBER MONORAIL SERVICE WALKWAYS ZONE(1016) W868

REV	DATE	DSG	CHK	APP	AMENDMENTS	STATUS
B	08/29/2023	MAH	MAH	DRAW	ISSUED FOR INFORMATION	IFI
A	08/11/2022	MAH	MAH	DRAW	ISSUED FOR INFORMATION	IFI

Project Code	Rubric	Initiator	Lot	Ref	Number	Revision
9 3 M	0 4 7 6	A C C	6 0 D E P	D W G	1 6 2 7 9	B

Tekla structures

Approval is subject to approval of coordination package between multi-discipline.

REVIEWED WITH COMMENT
MONORAILS PROJECT

Length & Area & Weight per piece						
W867	PL10*159.4	S355JR	1	178.1	0.05	1.6
Mark	Profile	Grade	QTY	Length	Area	Weight

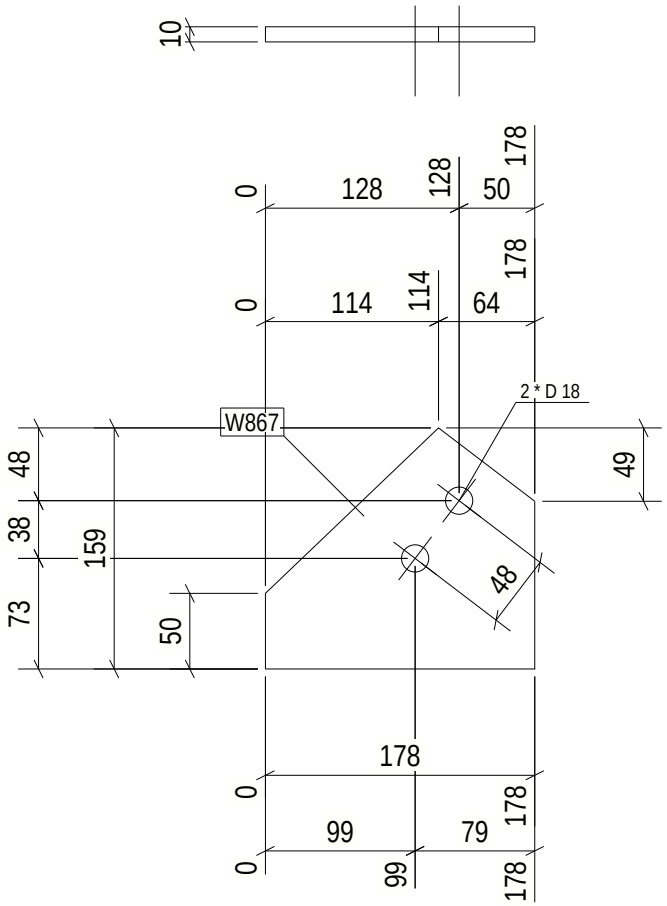

1 REQ'D AS DRAWN MK'D W867

6 October Monorail
Engineering Unit
Valid For Construction

GENERAL NOTES:

1. THE DIMENSIONS SHOWN ARE NOMINAL (IN MILLIMETERS), U.N.O.
2. WELD SIZESHALL BE AISC MINIMUM OF 6 mm UNLESS NOTED OTHERWISE.
3. ALL FIELD WELDS SHALL BE INSPECTED PER QUALITY ASSURANCE AND SPECIAL INSPECTIONS.

REFERENCE DRAWINGS

1	93M-BOA-NAT-LOT-04833
2	93M-BOA-NAT-LOT-09170
3	93M-BOA-NAT-LOT-01976
4	93M-BOA-NAT-LOT-20021
5	
6	
7	
8	
9	

6TH OF OCTOBER CITY RAIL TRANSIT MONORAIL

The Authority | Hill International Consultant | Main Contractor | Structural Designer

KEY PLAN:

SCALE: AS SHOWN | SHOP DRAWING | DATE: 08/29/2023

DRAWING TITLE: 6TH OF OCTOBER MONORAIL SERVICE WALKWAYS ZONE(1016) W867

REV	DATE	DSG	CHK	APP	AMENDMENTS	STATUS
B	08/29/2023	MAH	MAH	DRAW	ISSUED FOR INFORMATION	IFI
A	08/11/2022	MAH	MAH	DRAW	ISSUED FOR INFORMATION	IFI

Project Code	Rubric	Initiator	Lot	Ref	Number	Revision
9 3 M	0 4 7 6	A C C	6 0 D E P	D W G	1 6 2 8 0	B

Tekla structures

Approval is subject to approval of coordination package between multi-discipline.

REVIEWED WITH COMMENT
MONORAILS PROJECT

Length & Area & Weight per piece						
W866	PL10*159.4	S355JR	5	197.6	0.05	1.8
Mark	Profile	Grade	QTY	Length	Area	Weight

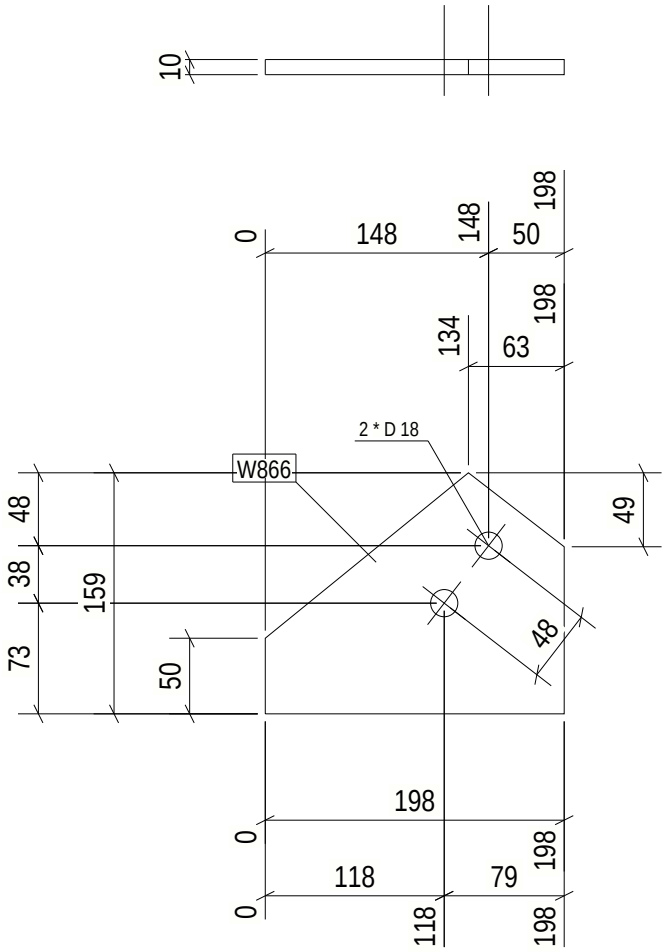

5 REQ'D AS DRAWN MK'D W866

6 October Monorail
Engineering Unit
Valid For Construction

GENERAL NOTES:

1. THE DIMENSIONS SHOWN ARE NOMINAL (IN MILLIMETERS), U.N.O.
2. WELD SIZESHALL BE AISC MINIMUM OF 6 mm UNLESS NOTED OTHERWISE.
3. ALL FIELD WELDS SHALL BE INSPECTED PER QUALITY ASSURANCE AND SPECIAL INSPECTIONS.

REFERENCE DRAWINGS

1	93M-BOA-NAT-LOT-04833
2	93M-BOA-NAT-LOT-09170
3	93M-BOA-NAT-LOT-01976
4	93M-BOA-NAT-LOT-20021
5	
6	
7	
8	
9	

6TH OF OCTOBER CITY RAIL TRANSIT MONORAIL

The Authority | Hill International Consultant | Main Contractor | Structural Designer

KEY PLAN:

SCALE: AS SHOWN | SHOP DRAWING | DATE: 08/29/2023

DRAWING TITLE: 6TH OF OCTOBER MONORAIL SERVICE WALKWAYS ZONE(1016) W866

REV	DATE	DSG	CHK	APP	AMENDMENTS	STATUS
B	08/29/2023	MAH	MAH	DRAW	ISSUED FOR INFORMATION	IFI
A	08/11/2022	MAH	MAH	DRAW	ISSUED FOR INFORMATION	IFI

Project Code	Rubric	Initiator	Lot	Ref	Number	Revision
9 3 M	0 4 7 6	A C C	6 0 D E P	D W G	1 6 2 8 1	B

Tekla structures

Approval is subject to approval of coordination package between multi-discipline.

REVIEWED WITH COMMENT
MONORAILS PROJECT

Length & Area & Weight per piece						
W860	CHS48.3*4.0	S235JR	1	333.5	0.05	1.5
Mark	Profile	Grade	QTY	Length	Area	Weight

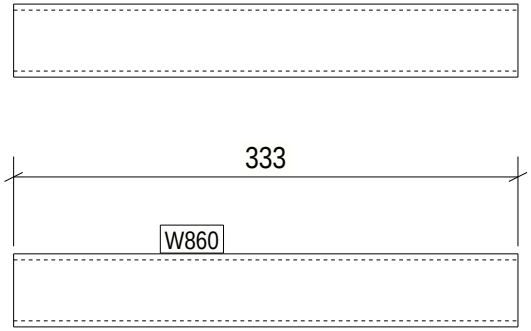

1 REQ'D AS DRAWN MK'D W860

6 October Monorail
Engineering Unit
Valid For Construction

GENERAL NOTES:

1. THE DIMENSIONS SHOWN ARE NOMINAL (IN MILLIMETERS), U.N.O.
2. WELD SIZESHALL BE AISC MINIMUM OF 6 mm UNLESS NOTED OTHERWISE.
3. ALL FIELD WELDS SHALL BE INSPECTED PER QUALITY ASSURANCE AND SPECIAL INSPECTIONS.

REFERENCE DRAWINGS

1	93M-BOA-NAT-LOT-04833
2	93M-BOA-NAT-LOT-09170
3	93M-BOA-NAT-LOT-01976
4	93M-BOA-NAT-LOT-20021
5	
6	
7	
8	
9	

6TH OF OCTOBER CITY RAIL TRANSIT MONORAIL

The Authority — Hill International Consultant — Main Contractor — Structural Designer

KEY PLAN:

REV	DATE	DSG	CHK	APP	AMENDMENTS	STATUS
B	08/29/2023	MAH	MAH	DR.MJE	ISSUED FOR INFORMATION	IFI
A	08/11/2022	MAH	MAH	DR.MJE	ISSUED FOR INFORMATION	IFI

SCALE: AS SHOWN | SHOP DRAWING | DATE: 08/29/2023

DRAWING TITLE: 6TH OF OCTOBER MONORAIL SERVICE WALKWAYS ZONE(1016) W860

Project Code	Rubric	Initiator	Lot	Ref	Number	Revision
93M	0476	ACC	60DEP	DWG	1628	B

Tekla structures

Approval is subject to approval of coordination package between multi-discipline.

REVIEWED WITH COMMENT
MONORAILS PROJECT

Length & Area & Weight per piece						
W859	CHS48.3*4.0	S235JR	2	269.1	0.04	1.2
Mark	Profile	Grade	QTY	Length	Area	Weight

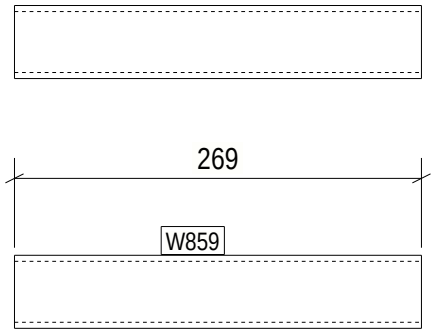

2 REQ'D AS DRAWN MK'D W859

6 October Monorail
Engineering Unit
Valid For Construction

Tekla structures

GENERAL NOTES:

1. THE DIMENSIONS SHOWN ARE NOMINAL (IN MILLIMETERS), U.N.O.
2. WELD SIZESHALL BE AISC MINIMUM OF 6 mm UNLESS NOTED OTHERWISE.
3. ALL FIELD WELDS SHALL BE INSPECTED PER QUALITY ASSURANCE AND SPECIAL INSPECTIONS.

REFERENCE DRAWINGS

1	93M-BOA-NAT-LOT-04833
2	93M-BOA-NAT-LOT-09170
3	93M-BOA-NAT-LOT-01976
4	93M-BOA-NAT-LOT-20021
5	
6	
7	
8	
9	

6TH OF OCTOBER CITY RAIL TRANSIT MONORAIL

The Authority | Hill International Consultant | Main Contractor | Structural Designer

KEY PLAN:

SCALE	SHOP DRAWING	DATE
AS SHOWN		08/29/2023

DRAWING TITLE
6TH OF OCTOBER MONORAIL SERVICE WALKWAYS ZONE(1016)
W859

REV	DATE	DSG	CHK	APP	AMENDMENTS	STATUS
B	08/29/2023	MAH	MAH	DRAW	ISSUED FOR INFORMATION	IFI
A	08/11/2022	MAH	MAH	DRAW	ISSUED FOR INFORMATION	IFI

Project Code	Rubric	Initiator	Lot	Ref	Number	Revision
9 3 M	0 4 7 6	A C C	6 0 D E P	D W G	1 6 2 8 3	B

Approval is subject to approval of coordination package between multi-discipline.

REVIEWED WITH COMMENT
MONORAILS PROJECT

Length & Area & Weight per piece						
W858	CHS48.3*4.0	S235JR	2	102.6	0.02	0.4
Mark	Profile	Grade	QTY	Length	Area	Weight

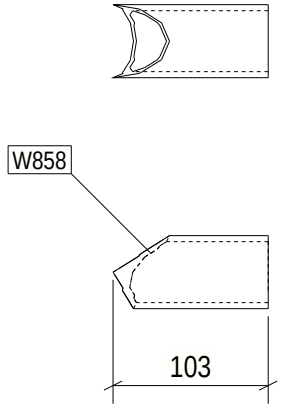

2 REQ'D AS DRAWN MK'D W858

6 October Monorail
Engineering Unit
Valid For Construction

GENERAL NOTES:

1. THE DIMENSIONS SHOWN ARE NOMINAL (IN MILLIMETERS), U.N.O.
2. WELD SIZESHALL BE AISC MINIMUM OF 6 mm UNLESS NOTED OTHERWISE.
3. ALL FIELD WELDS SHALL BE INSPECTED PER QUALITY ASSURANCE AND SPECIAL INSPECTIONS.

REFERENCE DRAWINGS

1	93M-BOA-NAT-LOT-04833
2	93M-BOA-NAT-LOT-09170
3	93M-BOA-NAT-LOT-01976
4	93M-BOA-NAT-LOT-20021
5	
6	
7	
8	
9	

6TH OF OCTOBER CITY RAIL TRANSIT MONORAIL

The Authority | Hill International Consultant | Main Contractor | Structural Designer

KEY PLAN:

SCALE: AS SHOWN | SHOP DRAWING | DATE: 08/29/2023

DRAWING TITLE: 6TH OF OCTOBER MONORAIL SERVICE WALKWAYS ZONE(1016) W858

REV	DATE	DSG	CHK	APP	AMENDMENTS	STATUS
B	08/29/2023	MAH	MAH	DRAW	ISSUED FOR INFORMATION	IFI
A	08/11/2022	MAH	MAH	DRAW	ISSUED FOR INFORMATION	IFI

Project Code	Rubric	Initiator	Lot	Ref	Number	Revision
93M	0476	ACC	60DEP	DWG	1628	4 B

Tekla structures

Approval is subject to approval of coordination package between multi-discipline.

REVIEWED WITH COMMENT
MONORAILS PROJECT

Length & Area & Weight per piece						
W857	CHS48.3*4.0	S235JR	1	139.0	0.02	0.6
Mark	Profile	Grade	QTY	Length	Area	Weight

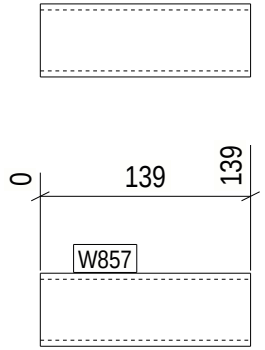

1 REQ'D AS DRAWN MK'D W857

6 October Monorail
Engineering Unit
Valid For Construction

GENERAL NOTES:

1. THE DIMENSIONS SHOWN ARE NOMINAL (IN MILLIMETERS), U.N.O.
2. WELD SIZESHALL BE AISC MINIMUM OF 6 mm UNLESS NOTED OTHERWISE.
3. ALL FIELD WELDS SHALL BE INSPECTED PER QUALITY ASSURANCE AND SPECIAL INSPECTIONS.

REFERENCE DRAWINGS

1	93M-BOA-NAT-LOT-04833
2	93M-BOA-NAT-LOT-09170
3	93M-BOA-NAT-LOT-01976
4	93M-BOA-NAT-LOT-20021
5	
6	
7	
8	
9	

6TH OF OCTOBER CITY RAIL TRANSIT MONORAIL

The Authority | Hill International Consultant | Main Contractor | Structural Designer

KEY PLAN:

SCALE: AS SHOWN | SHOP DRAWING | DATE: 08/29/2023

DRAWING TITLE: 6TH OF OCTOBER MONORAIL SERVICE WALKWAYS ZONE(1016) W857

REV	DATE	DSG	CHK	APP	AMENDMENTS	STATUS
B	08/29/2023	MAH	MAH	DRAW	ISSUED FOR INFORMATION	IFI
A	06/11/2022	MAH	MAH	DRAW	ISSUED FOR INFORMATION	IFI

Project Code	Rubric	Initiator	Lot	Ref	Number	Revision
9 3 M	0 4 7 6	A C C	6 0 D E P	D W G	1 6 2 8 5	B

Tekla structures

Approval is subject to approval of coordination package between multi-discipline.

REVIEWED WITH COMMENT
MONORAILS PROJECT

Length & Area & Weight per piece						
W856	CHS48.3*4.0	S235JR	1	709.4	0.11	3.1
Mark	Profile	Grade	QTY	Length	Area	Weight

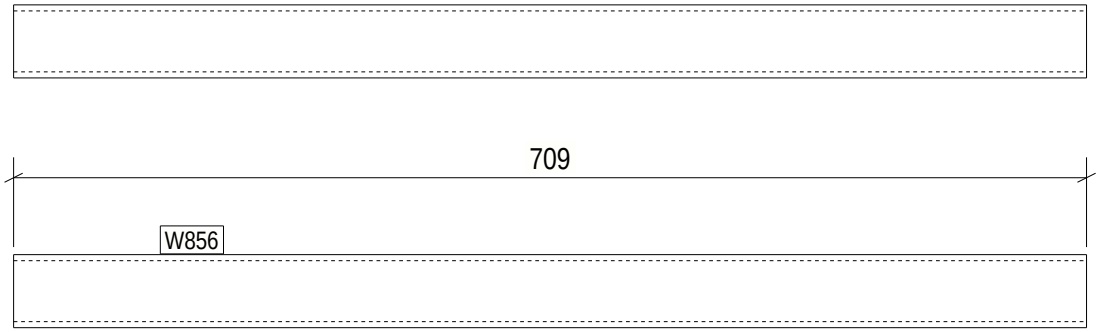

1 REQ'D AS DRAWN MK'D W856

6 October Monorail
Engineering Unit
Valid For Construction

Tekla structures

GENERAL NOTES:

1. THE DIMENSIONS SHOWN ARE NOMINAL (IN MILLIMETERS), U.N.O.
2. WELD SIZESHALL BE AISC MINIMUM OF 6 mm UNLESS NOTED OTHERWISE.
3. ALL FIELD WELDS SHALL BE INSPECTED PER QUALITY ASSURANCE AND SPECIAL INSPECTIONS.

REFERENCE DRAWINGS

1	93M-BOA-NAT-LOT-04833
2	93M-BOA-NAT-LOT-09170
3	93M-BOA-NAT-LOT-01976
4	93M-BOA-NAT-LOT-20021
5	
6	
7	
8	
9	

6TH OF OCTOBER CITY RAIL TRANSIT MONORAIL

The Authority — Hill International Consultant — Main Contractor — Structural Designer

KEY PLAN:

REV	DATE	DSG	CHK	APP	AMENDMENTS	STATUS
B	08/25/2023	MAH	MAH	DRAW	ISSUED FOR INFORMATION	IFI
A	08/11/2022	MAH	MAH	DRAW	ISSUED FOR INFORMATION	IFI

SCALE: AS SHOWN
SHOP DRAWING
DATE: 08/29/2023

DRAWING TITLE
6TH OF OCTOBER MONORAIL
SERVICE WALKWAYS
ZONE(1016)
W856

Project Code	Rubric	Initiator	Lot	Ref	Number	Revision
93M047	ACC60	DEP	DWG	1628	6	B

Approval is subject to approval of coordination package between multi-discipline.

REVIEWED WITH COMMENT
MONORAILS PROJECT

Length & Area & Weight per piece						
W855	CHS48.3*4.0	S235JR	2	645.0	0.10	2.8
Mark	Profile	Grade	QTY	Length	Area	Weight

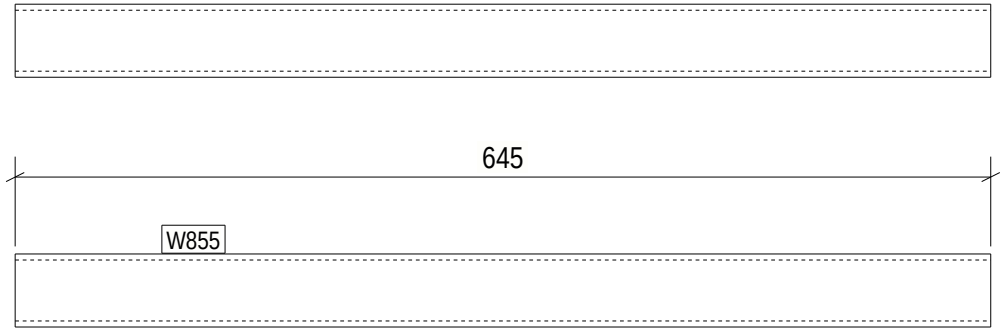

2 REQ'D AS DRAWN MK'D W855

6 October Monorail
Engineering Unit
Valid For Construction

Tekla structures

GENERAL NOTES:

1. THE DIMENSIONS SHOWN ARE NOMINAL (IN MILLIMETERS), U.N.O.
2. WELD SIZESHALL BE AISC MINIMUM OF 6 mm UNLESS NOTED OTHERWISE.
3. ALL FIELD WELDS SHALL BE INSPECTED PER QUALITY ASSURANCE AND SPECIAL INSPECTIONS.

REFERENCE DRAWINGS

1	93M-BOA-NAT-LOT-04833
2	93M-BOA-NAT-LOT-09170
3	93M-BOA-NAT-LOT-01976
4	93M-BOA-NAT-LOT-20021
5	
6	
7	
8	
9	

6TH OF OCTOBER CITY RAIL TRANSIT MONORAIL

The Authority | Hill International Consultant | Main Contractor | Structural Designer

KEY PLAN:

SCALE: AS SHOWN | SHOP DRAWING | DATE: 08/29/2023

DRAWING TITLE: 6TH OF OCTOBER MONORAIL SERVICE WALKWAYS ZONE(1016) W855

REV	DATE	DSG	CHK	APP	AMENDMENTS	STATUS
B	08/29/2023	MAH	MAH	DRAW	ISSUED FOR INFORMATION	IFI
A	08/11/2022	MAH	MAH	DRAW	ISSUED FOR INFORMATION	IFI

Project Code	Rubric	Initiator	Lot	Ref	Number	Revision
93M	0476	ACC	60DEP	DWG	1628	7 B

Approval is subject to approval of coordination package between multi-discipline.

REVIEWED WITH COMMENT
MONORAILS PROJECT

Length & Area & Weight per piece						
W853	CHS48.3*4.0	S235JR	1	144.0	0.02	0.6
Mark	Profile	Grade	QTY	Length	Area	Weight

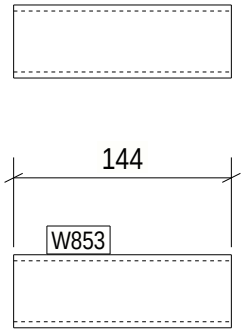

1 REQ'D AS DRAWN MK'D W853

6 October Monorail
Engineering Unit
Valid For Construction

Tekla structures

GENERAL NOTES:

1. THE DIMENSIONS SHOWN ARE NOMINAL (IN MILLIMETERS), U.N.O.
2. WELD SIZESHALL BE AISC MINIMUM OF 6 mm UNLESS NOTED OTHERWISE.
3. ALL FIELD WELDS SHALL BE INSPECTED PER QUALITY ASSURANCE AND SPECIAL INSPECTIONS.

REFERENCE DRAWINGS

1	93M-BOA-NAT-LOT-04833
2	93M-BOA-NAT-LOT-09170
3	93M-BOA-NAT-LOT-01976
4	93M-BOA-NAT-LOT-20021
5	
6	
7	
8	
9	

6TH OF OCTOBER CITY RAIL TRANSIT MONORAIL

The Authority | Hill International Consultant | Main Contractor | Structural Designer

KEY PLAN:

SCALE	SHOP DRAWING	DATE
AS SHOWN		08/29/2023

DRAWING TITLE
6TH OF OCTOBER MONORAIL
SERVICE WALKWAYS
ZONE(1016)
W853

REV	DATE	DSG	CHK	APP	AMENDMENTS	STATUS
B	08/29/2023	MAH	MAH	DRAW	ISSUED FOR INFORMATION	IFI
A	08/11/2022	MAH	MAH	DRAW	ISSUED FOR INFORMATION	IFI

Project Code	Rubric	Initiator	Lot	Ref	Number	Revision
9 3 M	0 4 7 6	A C C	6 0 D E P	D W G	1 6 2 8 8	B

Approval is subject to approval of coordination package between multi-discipline.

REVIEWED WITH COMMENT
MONORAILS PROJECT

Length & Area & Weight per piece						
W852	PL8*167.5	S355JR	1	215.9	0.06	1.7
Mark	Profile	Grade	QTY	Length	Area	Weight

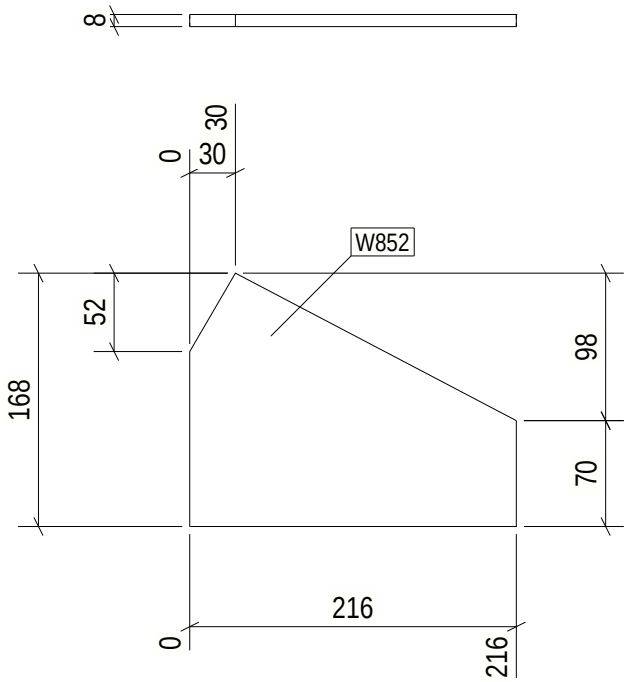

1 REQ'D AS DRAWN MK'D W852

6 October Monorail
Engineering Unit
Valid For Construction

GENERAL NOTES:

1. THE DIMENSIONS SHOWN ARE NOMINAL (IN MILLIMETERS), U.N.O.
2. WELD SIZESHALL BE AISC MINIMUM OF 6 mm UNLESS NOTED OTHERWISE.
3. ALL FIELD WELDS SHALL BE INSPECTED PER QUALITY ASSURANCE AND SPECIAL INSPECTIONS.

REFERENCE DRAWINGS

1	93M-BOA-NAT-LOT-04833
2	93M-BOA-NAT-LOT-09170
3	93M-BOA-NAT-LOT-01976
4	93M-BOA-NAT-LOT-20021
5	
6	
7	
8	
9	

6TH OF OCTOBER CITY RAIL TRANSIT MONORAIL

The Authority | Hill International Consultant | Main Contractor | Structural Designer

KEY PLAN:

SCALE: AS SHOWN | SHOP DRAWING | DATE: 08/29/2023

DRAWING TITLE: 6TH OF OCTOBER MONORAIL SERVICE WALKWAYS ZONE(1016) W852

REV	DATE	DSG	CHK	APP	AMENDMENTS	STATUS
B	08/29/2023	MAH	MAH	DRAW	ISSUED FOR INFORMATION	IFI
A	08/11/2022	MAH	MAH	DRAW	ISSUED FOR INFORMATION	IFI

Project Code	Rubric	Initiator	Lot	Ref	Number	Revision
9 3 M	0 4 7 6	A C C	6 0 D E P	D W G	1 6 2 8 9	B

Tekla structures

Approval is subject to approval of coordination package between multi-discipline.

REVIEWED WITH COMMENT
MONORAILS PROJECT

Length & Area & Weight per piece						
W851	PL16*100	S355JR	2	160.0	0.04	2.0
Mark	Profile	Grade	QTY	Length	Area	Weight

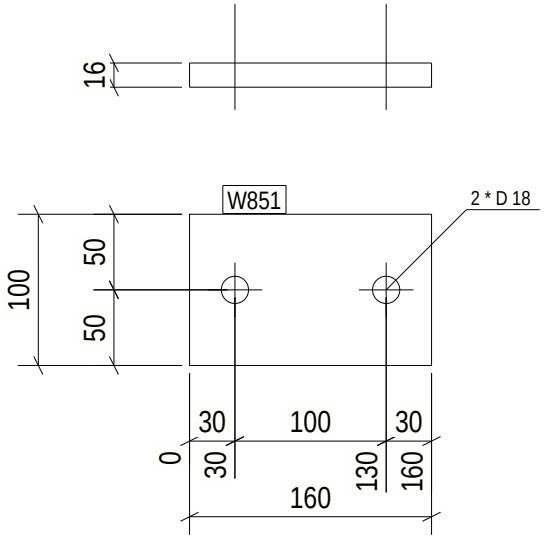

2 REQ'D AS DRAWN MK'D W851

6 October Monorail
Engineering Unit
Valid For Construction

GENERAL NOTES:

1. THE DIMENSIONS SHOWN ARE NOMINAL (IN MILLIMETERS), U.N.O.
2. WELD SIZESHALL BE AISC MINIMUM OF 6 mm UNLESS NOTED OTHERWISE.
3. ALL FIELD WELDS SHALL BE INSPECTED PER QUALITY ASSURANCE AND SPECIAL INSPECTIONS.

REFERENCE DRAWINGS

1	93M-BOA-NAT-LOT-04833
2	93M-BOA-NAT-LOT-09170
3	93M-BOA-NAT-LOT-01976
4	93M-BOA-NAT-LOT-20021
5	
6	
7	
8	
9	

6TH OF OCTOBER CITY RAIL TRANSIT MONORAIL

The Authority | Hill International Consultant | Main Contractor | Structural Designer

KEY PLAN:

SCALE: AS SHOWN | SHOP DRAWING | DATE: 08/29/2023

DRAWING TITLE: 6TH OF OCTOBER MONORAIL SERVICE WALKWAYS ZONE(1016) W851

REV	DATE	DSG	CHK	APP	AMENDMENTS	STATUS
B	08/29/2023	MAH	MAH	DRAW	ISSUED FOR INFORMATION	IFI
A	08/11/2022	MAH	MAH	DRAW	ISSUED FOR INFORMATION	IFI

Project Code	Rubric	Initiator	Lot	Ref	Number	Revision
9 3 M	0 4 7 6	A C C	6 0 D E P	D W G	1 6 2 9 0	B

Tekla structures

Approval is subject to approval of coordination package between multi-discipline.

REVIEWED WITH COMMENT
MONORAILS PROJECT

Length & Area & Weight per piece						
W850	PL16*100	S355JR	2	160.0	0.04	2.0
Mark	Profile	Grade	QTY	Length	Area	Weight

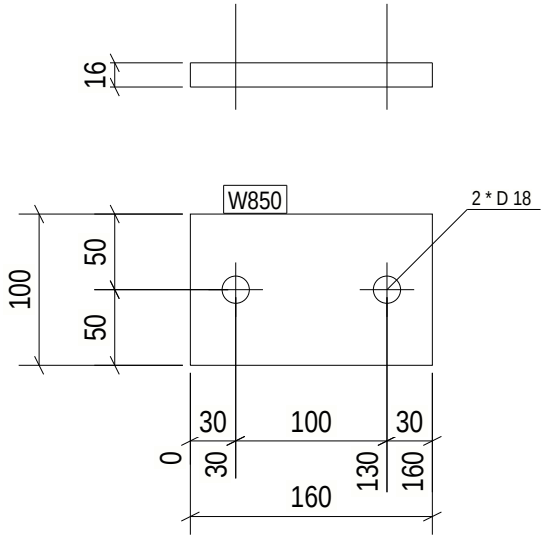

2 REQ'D AS DRAWN MK'D W850

6 October Monorail
Engineering Unit
Valid For Construction

GENERAL NOTES:

1. THE DIMENSIONS SHOWN ARE NOMINAL (IN MILLIMETERS), U.N.O.
2. WELD SIZESHALL BE AISC MINIMUM OF 6 mm UNLESS NOTED OTHERWISE.
3. ALL FIELD WELDS SHALL BE INSPECTED PER QUALITY ASSURANCE AND SPECIAL INSPECTIONS.

REFERENCE DRAWINGS

1	93M-BOA-NAT-LOT-04833
2	93M-BOA-NAT-LOT-09170
3	93M-BOA-NAT-LOT-01976
4	93M-BOA-NAT-LOT-20021
5	
6	
7	
8	
9	

6TH OF OCTOBER CITY RAIL TRANSIT MONORAIL

The Authority | Hill International Consultant | Main Contractor | Structural Designer

KEY PLAN:

SCALE: AS SHOWN | SHOP DRAWING | DATE: 08/29/2023

DRAWING TITLE: 6TH OF OCTOBER MONORAIL SERVICE WALKWAYS ZONE(1016) W850

REV	DATE	DSG	CHK	APP	AMENDMENTS	STATUS
B	08/29/2023	MAH	MAH	DRAW	ISSUED FOR INFORMATION	IFI
A	08/11/2022	MAH	MAH	DRAW	ISSUED FOR INFORMATION	IFI

Project Code	Rubric	Initiator	Lot	Ref	Number	Revision
93M	0476	ACC	60DEP	DWG	1629	1 B

Tekla structures

Approval is subject to approval of coordination package between multi-discipline.

REVIEWED WITH COMMENT
MONORAILS PROJECT

Length & Area & Weight per piece						
W849	PL8*159.9	S355JR	1	248.2	0.06	1.6
Mark	Profile	Grade	QTY	Length	Area	Weight

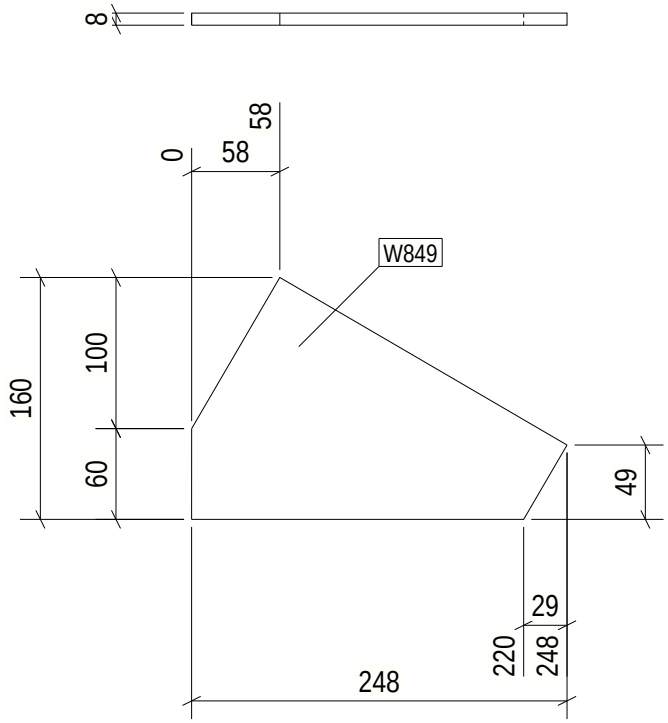

1 REQ'D AS DRAWN MK'D W849

6 October Monorail
Engineering Unit
Valid For Construction

GENERAL NOTES:

1. THE DIMENSIONS SHOWN ARE NOMINAL (IN MILLIMETERS), U.N.O.
2. WELD SIZESHALL BE AISC MINIMUM OF 6 mm UNLESS NOTED OTHERWISE.
3. ALL FIELD WELDS SHALL BE INSPECTED PER QUALITY ASSURANCE AND SPECIAL INSPECTIONS.

REFERENCE DRAWINGS

1	93M-BOA-NAT-LOT-04833
2	93M-BOA-NAT-LOT-09170
3	93M-BOA-NAT-LOT-01976
4	93M-BOA-NAT-LOT-20021
5	
6	
7	
8	
9	

6TH OF OCTOBER CITY RAIL TRANSIT MONORAIL

The Authority | Hill International Consultant | Main Contractor | Structural Designer

KEY PLAN:

SCALE: AS SHOWN | SHOP DRAWING | DATE: 08/29/2023

DRAWING TITLE: 6TH OF OCTOBER MONORAIL SERVICE WALKWAYS ZONE(1016) W849

REV	DATE	DSG	CHK	APP	AMENDMENTS	STATUS
B	08/29/2023	MAH	MAH	DRAW	ISSUED FOR INFORMATION	IFI
A	08/11/2022	MAH	MAH	DRAW	ISSUED FOR INFORMATION	IFI

Project Code	Rubric	Initiator	Lot	Ref	Number	Revision
9 3 M	0 4 7 6	A C C	6 0 D E P	D W G	1 6 2 9 2	B

Tekla structures

Approval is subject to approval of coordination package between multi-discipline.

REVIEWED WITH COMMENT
MONORAILS PROJECT

Length & Area & Weight per piece

Mark	Profile	Grade	QTY	Length	Area	Weight
W848	PL10*25	S355JR	4	97.5	0.01	0.2

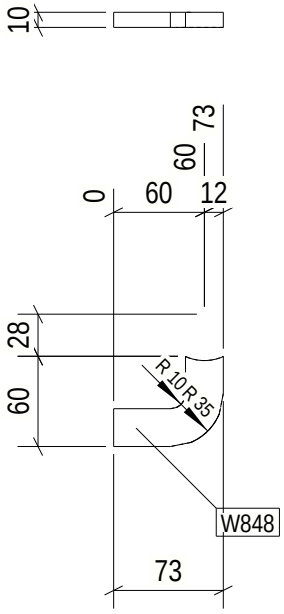

4 REQ'D AS DRAWN MK'D W848

6 October Monorail
Engineering Unit
Valid For Construction

GENERAL NOTES:

1. THE DIMENSIONS SHOWN ARE NOMINAL (IN MILLIMETERS), U.N.O.
2. WELD SIZESHALL BE AISC MINIMUM OF 6 mm UNLESS NOTED OTHERWISE.
3. ALL FIELD WELDS SHALL BE INSPECTED PER QUALITY ASSURANCE AND SPECIAL INSPECTIONS.

REFERENCE DRAWINGS

1	93M-BOA-NAT-LOT-04833
2	93M-BOA-NAT-LOT-09170
3	93M-BOA-NAT-LOT-01976
4	93M-BOA-NAT-LOT-20021
5	
6	
7	
8	
9	

6TH OF OCTOBER CITY RAIL TRANSIT MONORAIL

The Authority — Hill International Consultant — Main Contractor — Structural Designer

KEY PLAN:

SCALE: AS SHOWN | SHOP DRAWING | DATE: 08/29/2023

DRAWING TITLE: 6TH OF OCTOBER MONORAIL SERVICE WALKWAYS ZONE(1016) W848

REV	DATE	DSG	CHK	APP	AMENDMENTS	STATUS
B	08/29/2023	MAH	MAH	DRAW	ISSUED FOR INFORMATION	IFI
A	08/11/2022	MAH	MAH	DRAW	ISSUED FOR INFORMATION	IFI

Project Code	Rubric	Initiator	Lot	Ref	Number	Revision
9 3 M	0 4 7 6	A C C	6 0 D E P	D W G	1 6 2 9 3	B

Tekla structures

Approval is subject to approval of coordination package between multi-discipline.

REVIEWED WITH COMMENT
MONORAILS PROJECT

Length & Area & Weight per piece						
W847	L70*7	S235JR	1	986.0	0.28	7.2
Mark	Profile	Grade	QTY	Length	Area	Weight

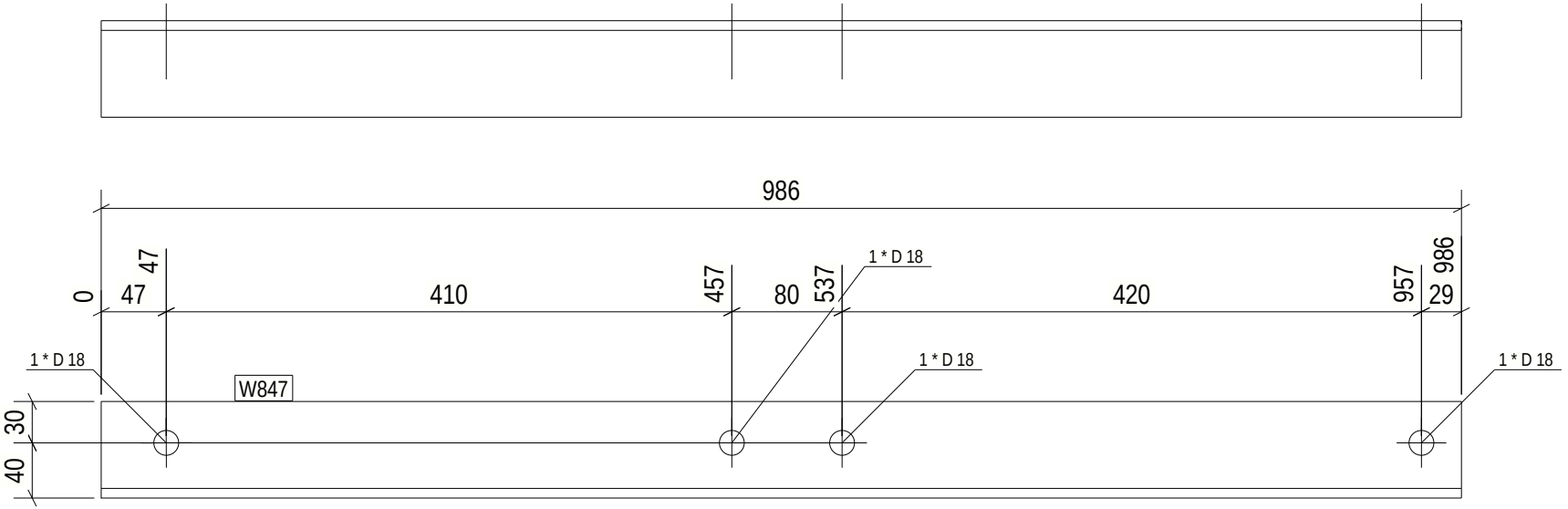

1 REQ'D AS DRAWN MK'D W847

6 October Monorail
Engineering Unit
Valid For Construction

GENERAL NOTES:

1. THE DIMENSIONS SHOWN ARE NOMINAL (IN MILLIMETERS), U.N.O.
2. WELD SIZESHALL BE AISC MINIMUM OF 6 mm UNLESS NOTED OTHERWISE.
3. ALL FIELD WELDS SHALL BE INSPECTED PER QUALITY ASSURANCE AND SPECIAL INSPECTIONS.

REFERENCE DRAWINGS

1	93M-BOA-NAT-LOT-04833
2	93M-BOA-NAT-LOT-09170
3	93M-BOA-NAT-LOT-01976
4	93M-BOA-NAT-LOT-20021
5	
6	
7	
8	
9	

6TH OF OCTOBER CITY RAIL TRANSIT MONORAIL

The Authority — Hill International Consultant — Main Contractor — Structural Designer

KEY PLAN:

SCALE: AS SHOWN | SHOP DRAWING | DATE: 08/29/2023

DRAWING TITLE: 6TH OF OCTOBER MONORAIL SERVICE WALKWAYS ZONE(1016) W847

REV	DATE	DSG	CHK	APP	AMENDMENTS	STATUS
B	08/29/2023	MAH	MAH	DRAW	ISSUED FOR INFORMATION	IFI
A	08/11/2022	MAH	MAH	DRAW	ISSUED FOR INFORMATION	IFI

Project Code	Rubric	Initiator	Lot	Ref	Number	Revision
9 3 M	0 4 7 6	A C C	6 0 D E P	D W G	1 6 2 9 4	B

Tekla structures

Approval is subject to approval of coordination package between multi-discipline.

REVIEWED WITH COMMENT
MONORAILS PROJECT

Length & Area & Weight per piece

Mark	Profile	Grade	QTY	Length	Area	Weight
W846	PL8*167.5	S355JR	1	227.1	0.06	1.6

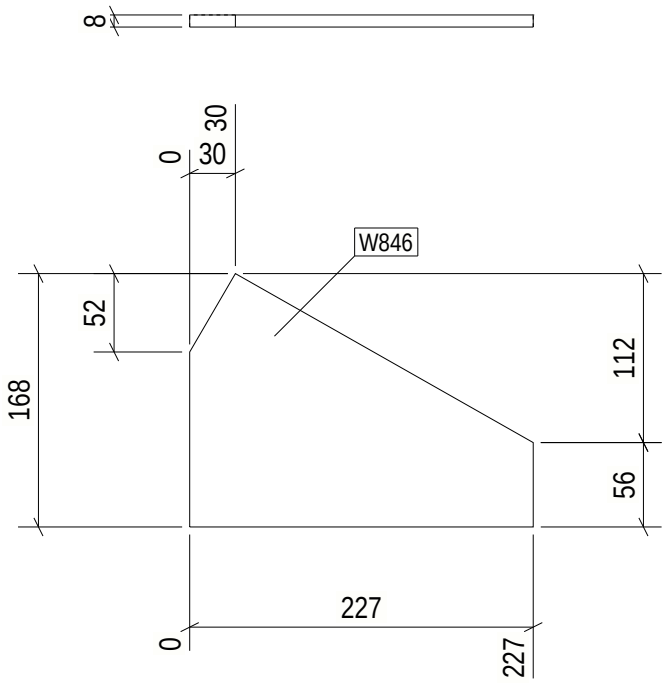

1 REQ'D AS DRAWN MK'D W846

6 October Monorail
Engineering Unit
Valid For Construction

GENERAL NOTES:

1. THE DIMENSIONS SHOWN ARE NOMINAL (IN MILLIMETERS), U.N.O.
2. WELD SIZESHALL BE AISC MINIMUM OF 6 mm UNLESS NOTED OTHERWISE.
3. ALL FIELD WELDS SHALL BE INSPECTED PER QUALITY ASSURANCE AND SPECIAL INSPECTIONS.

REFERENCE DRAWINGS

1	93M-BOA-NAT-LOT-04833
2	93M-BOA-NAT-LOT-09170
3	93M-BOA-NAT-LOT-01976
4	93M-BOA-NAT-LOT-20021
5	
6	
7	
8	
9	

6TH OF OCTOBER CITY RAIL TRANSIT MONORAIL

The Authority | Hill International Consultant | Main Contractor | Structural Designer

KEY PLAN:

SCALE: AS SHOWN | SHOP DRAWING | DATE: 08/29/2023

DRAWING TITLE: 6TH OF OCTOBER MONORAIL SERVICE WALKWAYS ZONE(1016) W846

REV	DATE	DSG	CHK	APP	AMENDMENTS	STATUS
B	08/29/2023	MAH	MAH	DRAW	ISSUED FOR INFORMATION	IFI
A	08/11/2022	MAH	MAH	DRAW	ISSUED FOR INFORMATION	IFI

Project Code	Rubric	Initiator	Lot	Ref	Number	Revision
9 3 M	0 4 7 6	A C C	6 0 D E P	D W G	1 6 2 9 5	B

Tekla structures

Approval is subject to approval of coordination package between multi-discipline.

REVIEWED WITH COMMENT
MONORAILS PROJECT

Length & Area & Weight per piece						
W845	PL3*45	S355JR	13	45.0	0.00	0.0
Mark	Profile	Grade	QTY	Length	Area	Weight

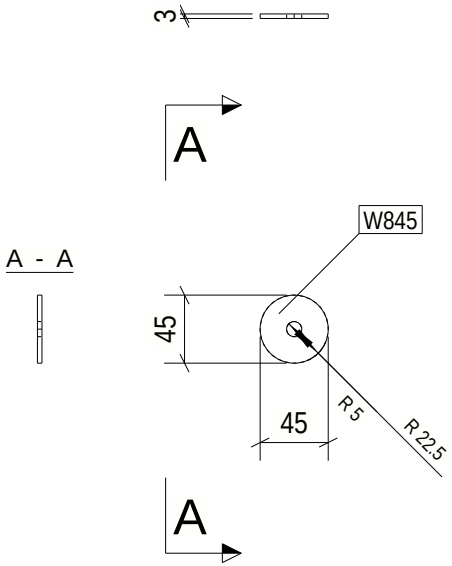

13 REQ'D AS DRAWN MK'D W845

6 October Monorail
Engineering Unit
Valid For Construction

GENERAL NOTES:

1. THE DIMENSIONS SHOWN ARE NOMINAL (IN MILLIMETERS), U.N.O.
2. WELD SIZESHALL BE AISC MINIMUM OF 6 mm UNLESS NOTED OTHERWISE.
3. ALL FIELD WELDS SHALL BE INSPECTED PER QUALITY ASSURANCE AND SPECIAL INSPECTIONS.

REFERENCE DRAWINGS

1	93M-BOA-NAT-LOT-04833
2	93M-BOA-NAT-LOT-09170
3	93M-BOA-NAT-LOT-01976
4	93M-BOA-NAT-LOT-20021
5	
6	
7	
8	
9	

6TH OF OCTOBER CITY RAIL TRANSIT MONORAIL

The Authority | Hill International Consultant | Main Contractor | Structural Designer

KEY PLAN:

SCALE	SHOP DRAWING	DATE
AS SHOWN		08/29/2023

DRAWING TITLE
6TH OF OCTOBER MONORAIL
SERVICE WALKWAYS
ZONE(1016)
W845

REV	DATE	DSG	CHK	APP	AMENDMENTS	STATUS
B	08/29/2023	MAH	MAH	DRAW	ISSUED FOR INFORMATION	IFI
A	08/11/2022	MAH	MAH	DRAW	ISSUED FOR INFORMATION	IFI

Project Code	Rubric	Initiator	Lot	Ref	Number	Revision
9 3 M	0 4 7 6	A C C	6 0 D E P	D W G	1 6 2 9 6	B

Tekla structures

Approval is subject to approval of coordination package between multi-discipline.

REVIEWED WITH COMMENT
MONORAILS PROJECT

Length & Area & Weight per piece						
W844	PL8*286.9	S355JR	4	474.2	0.24	7.1
Mark	Profile	Grade	QTY	Length	Area	Weight

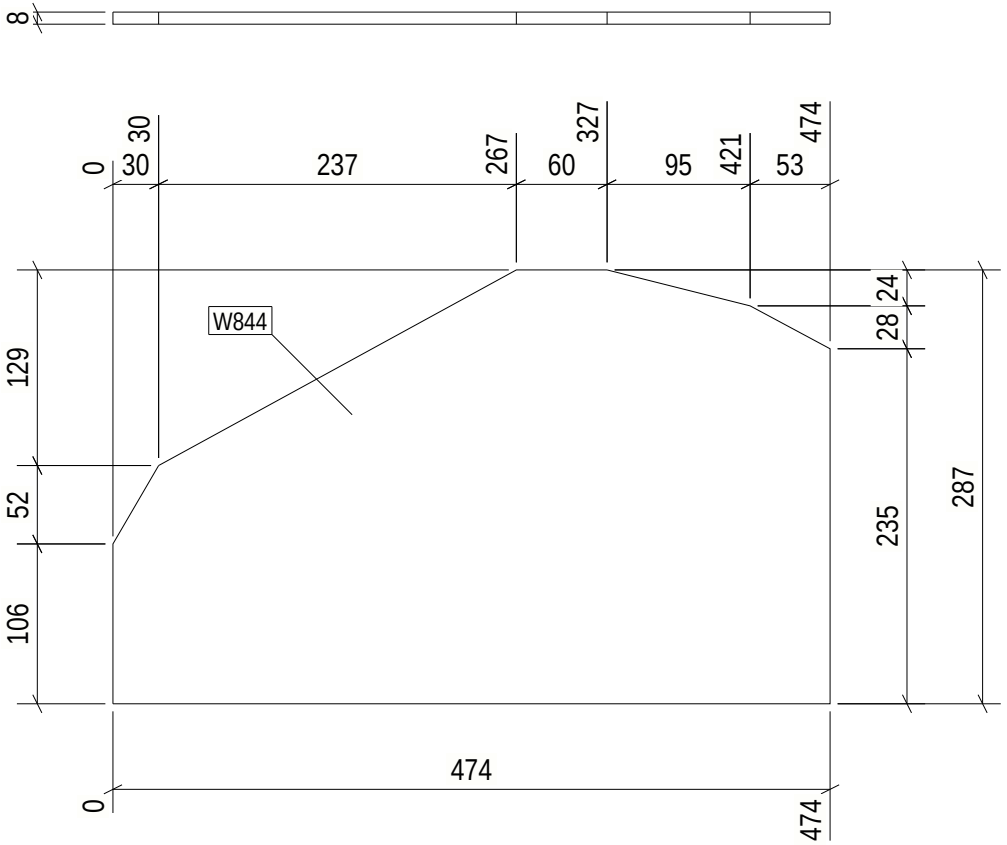

4 REQ'D AS DRAWN MK'D W844

6 October Monorail
Engineering Unit
Valid For Construction

GENERAL NOTES:

1. THE DIMENSIONS SHOWN ARE NOMINAL (IN MILLIMETERS), U.N.O.
2. WELD SIZESHALL BE AISC MINIMUM OF 6 mm UNLESS NOTED OTHERWISE.
3. ALL FIELD WELDS SHALL BE INSPECTED PER QUALITY ASSURANCE AND SPECIAL INSPECTIONS.

REFERENCE DRAWINGS

1	93M-BOA-NAT-LOT-04833
2	93M-BOA-NAT-LOT-09170
3	93M-BOA-NAT-LOT-01976
4	93M-BOA-NAT-LOT-20021
5	
6	
7	
8	
9	

6TH OF OCTOBER CITY RAIL TRANSIT MONORAIL

The Authority — Hill International Consultant — Main Contractor — Structural Designer

KEY PLAN:

SCALE: AS SHOWN | SHOP DRAWING | DATE: 08/29/2023

DRAWING TITLE: 6TH OF OCTOBER MONORAIL SERVICE WALKWAYS ZONE(1016) W844

REV	DATE	DSG	CHK	APP	AMENDMENTS	STATUS
B	08/29/2023	MAH	MAH	DRAW	ISSUED FOR INFORMATION	IFI
A	08/11/2022	MAH	MAH	DRAW	ISSUED FOR INFORMATION	IFI

Project Code	Rubric	Initiator	Lot	Ref	Number	Revision
9 3 M	0 4 7 6	A C C	6 0 D E P	D W G	1 6 2 9 7	B

Tekla structures

Approval is subject to approval of coordination package between multi-discipline.

REVIEWED WITH COMMENT
MONORAILS PROJECT

Length & Area & Weight per piece						
W843	PL8*166.7	S355JR	4	232.9	0.05	1.5
Mark	Profile	Grade	QTY	Length	Area	Weight

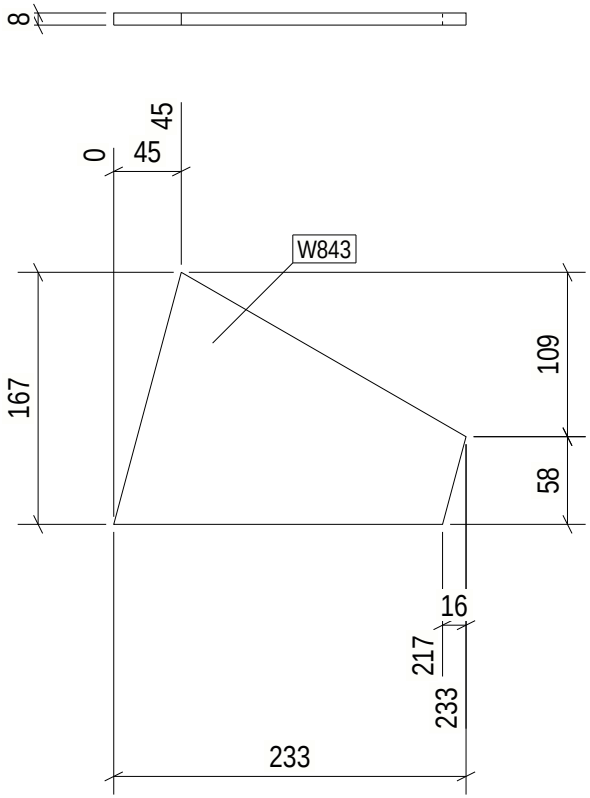

4 REQ'D AS DRAWN MK'D W843

6 October Monorail
Engineering Unit
Valid For Construction

GENERAL NOTES:

1. THE DIMENSIONS SHOWN ARE NOMINAL (IN MILLIMETERS), U.N.O.
2. WELD SIZESHALL BE AISC MINIMUM OF 6 mm UNLESS NOTED OTHERWISE.
3. ALL FIELD WELDS SHALL BE INSPECTED PER QUALITY ASSURANCE AND SPECIAL INSPECTIONS.

REFERENCE DRAWINGS

1	93M-BOA-NAT-LOT-04833
2	93M-BOA-NAT-LOT-09170
3	93M-BOA-NAT-LOT-01976
4	93M-BOA-NAT-LOT-20021
5	
6	
7	
8	
9	

6TH OF OCTOBER CITY RAIL TRANSIT MONORAIL

The Authority | Hill International Consultant | Main Contractor | Structural Designer

KEY PLAN:

SCALE: AS SHOWN | SHOP DRAWING | DATE: 08/29/2023

DRAWING TITLE: 6TH OF OCTOBER MONORAIL SERVICE WALKWAYS ZONE(1016) W843

REV	DATE	DSG	CHK	APP	AMENDMENTS	STATUS
B	08/29/2023	MAH	MAH	DRAW	ISSUED FOR INFORMATION	IFI
A	08/21/2022	MAH	MAH	DRAW	ISSUED FOR INFORMATION	IFI

Project Code	Rubric	Initiator	Lot	Ref	Number	Revision
9 3 M	0 4 7 6	A C C	6 0 D E P	D W G	1 6 2 9 8	B

Tekla structures

Approval is subject to approval of coordination package between multi-discipline.

REVIEWED WITH COMMENT
MONORAILS PROJECT

Length & Area & Weight per piece						
W842	PL8*159.9	S355JR	1	252.9	0.06	1.6
Mark	Profile	Grade	QTY	Length	Area	Weight

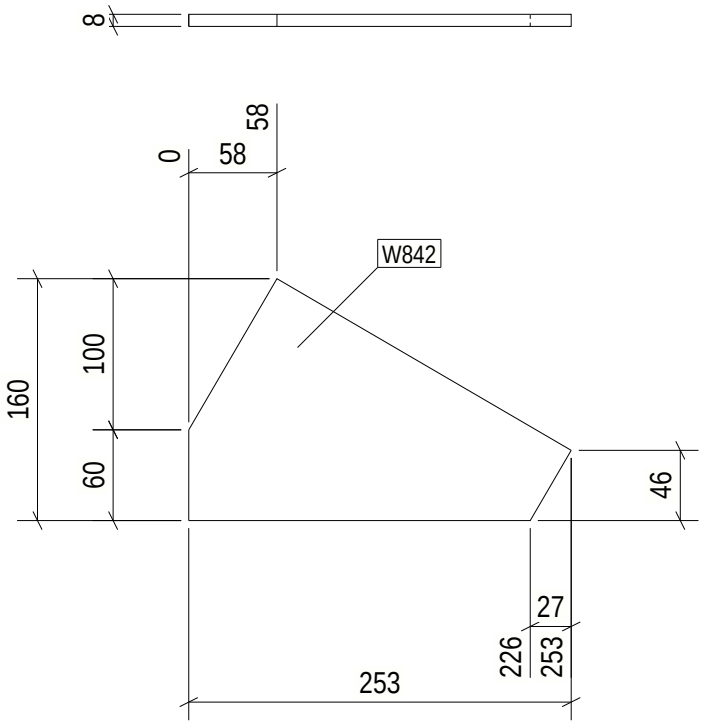

1 REQ'D AS DRAWN MK'D W842

6 October Monorail
Engineering Unit
Valid For Construction

GENERAL NOTES:

1. THE DIMENSIONS SHOWN ARE NOMINAL (IN MILLIMETERS), U.N.O.
2. WELD SIZESHALL BE AISC MINIMUM OF 6 mm UNLESS NOTED OTHERWISE.
3. ALL FIELD WELDS SHALL BE INSPECTED PER QUALITY ASSURANCE AND SPECIAL INSPECTIONS.

REFERENCE DRAWINGS

1	93M-BOA-NAT-LOT-04833
2	93M-BOA-NAT-LOT-09170
3	93M-BOA-NAT-LOT-01976
4	93M-BOA-NAT-LOT-20021
5	
6	
7	
8	
9	

6TH OF OCTOBER CITY RAIL TRANSIT MONORAIL

The Authority | Hill International Consultant | Main Contractor | Structural Designer

KEY PLAN:

SCALE: AS SHOWN | SHOP DRAWING | DATE: 08/29/2023

DRAWING TITLE: 6TH OF OCTOBER MONORAIL SERVICE WALKWAYS ZONE(1016) W842

REV	DATE	DSG	CHK	APP	AMENDMENTS	STATUS
B	08/29/2023	MAH	MAH	DRAW	ISSUED FOR INFORMATION	IFI
A	08/11/2022	MAH	MAH	DRAW	ISSUED FOR INFORMATION	IFI

Project Code	Rubric	Initiator	Lot	Ref	Number	Revision
9 3 M	0 4 7 6	A C C	6 0 D E P	D W G	1 6 2 9 9	B

Tekla structures

Approval is subject to approval of coordination package between multi-discipline.

REVIEWED WITH COMMENT
MONORAILS PROJECT

Length & Area & Weight per piece

Mark	Profile	Grade	QTY	Length	Area	Weight
W838	L70*7	S235JR	4	64.0	0.02	0.5

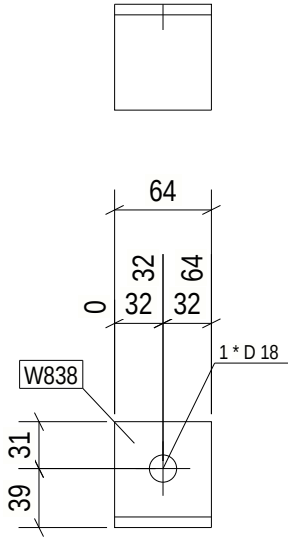

4 REQ'D AS DRAWN MK'D W838

6 October Monorail
Engineering Unit
Valid For Construction

GENERAL NOTES:

1. THE DIMENSIONS SHOWN ARE NOMINAL (IN MILLIMETERS), U.N.O.
2. WELD SIZESHALL BE AISC MINIMUM OF 6 mm UNLESS NOTED OTHERWISE.
3. ALL FIELD WELDS SHALL BE INSPECTED PER QUALITY ASSURANCE AND SPECIAL INSPECTIONS.

REFERENCE DRAWINGS

1	93M-BOA-NAT-LOT-04833
2	93M-BOA-NAT-LOT-09170
3	93M-BOA-NAT-LOT-01976
4	93M-BOA-NAT-LOT-20021
5	
6	
7	
8	
9	

6TH OF OCTOBER CITY RAIL TRANSIT MONORAIL

The Authority — Hill International Consultant — Main Contractor — Structural Designer

KEY PLAN:

SCALE: AS SHOWN | SHOP DRAWING | DATE: 08/29/2023

DRAWING TITLE: 6TH OF OCTOBER MONORAIL SERVICE WALKWAYS ZONE(1016) W838

REV	DATE	DSG	CHK	APP	AMENDMENTS	STATUS
B	08/29/2023	MAH	MAH	DRAW	ISSUED FOR INFORMATION	IFI
A	08/11/2022	MAH	MAH	DRAW	ISSUED FOR INFORMATION	IFI

Project Code	Rubric	Initiator	Lot	Ref	Number	Revision
93M	0476	ACC60	DEP	DWG	1630	0 B

Tekla structures

Approval is subject to approval of coordination package between multi-discipline.

REVIEWED WITH COMMENT
MONORAILS PROJECT

Length & Area & Weight per piece

Mark	Profile	Grade	QTY	Length	Area	Weight
W837	PL5*80	S355JR	4	161.9	0.02	0.3

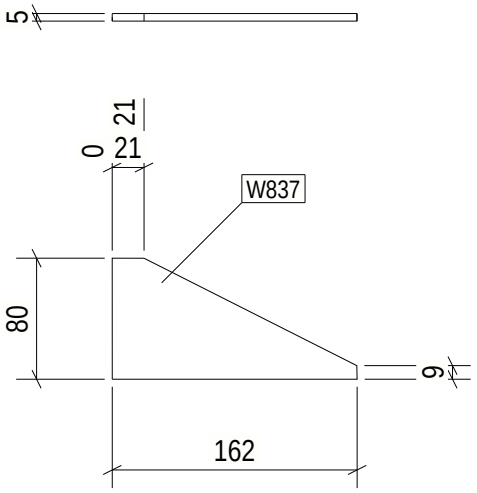

4 REQ'D AS DRAWN MK'D W837

6 October Monorail
Engineering Unit
Valid For Construction

GENERAL NOTES:

1. THE DIMENSIONS SHOWN ARE NOMINAL (IN MILLIMETERS), U.N.O.
2. WELD SIZESHALL BE AISC MINIMUM OF 6 mm UNLESS NOTED OTHERWISE.
3. ALL FIELD WELDS SHALL BE INSPECTED PER QUALITY ASSURANCE AND SPECIAL INSPECTIONS.

REFERENCE DRAWINGS

1	93M-BOA-NAT-LOT-04833
2	93M-BOA-NAT-LOT-09170
3	93M-BOA-NAT-LOT-01976
4	93M-BOA-NAT-LOT-20021
5	
6	
7	
8	
9	

6TH OF OCTOBER CITY RAIL TRANSIT MONORAIL

The Authority — Hill International Consultant — Main Contractor — Structural Designer

KEY PLAN:

SCALE: AS SHOWN | SHOP DRAWING | DATE: 08/29/2023

DRAWING TITLE: 6TH OF OCTOBER MONORAIL SERVICE WALKWAYS ZONE(1016) W837

REV	DATE	DSG	CHK	APP	AMENDMENTS	STATUS
B	08/29/2023	MAH	MAH	DRAW	ISSUED FOR INFORMATION	IFI
A	08/11/2022	MAH	MAH	DRAW	ISSUED FOR INFORMATION	IFI

Project Code	Rubric	Initiator	Lot	Ref	Number	Revision
9 3 M	0 4 7 6	A C C	6 0 D E P	D W G	1 6 3 0 1	B

Tekla structures

Approval is subject to approval of coordination package between multi-discipline.

REVIEWED WITH COMMENT
MONORAILS PROJECT

Length & Area & Weight per piece						
W836	CHS48.3*4.0	S235JR	1	203.5	0.03	0.9
Mark	Profile	Grade	QTY	Length	Area	Weight

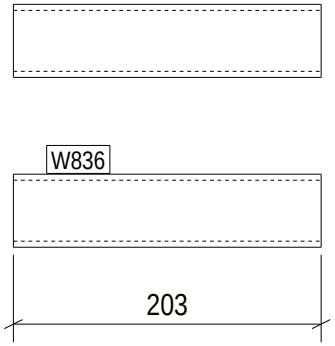

1 REQ'D AS DRAWN MK'D W836

6 October Monorail
Engineering Unit
Valid For Construction

Tekla structures

GENERAL NOTES:

1. THE DIMENSIONS SHOWN ARE NOMINAL (IN MILLIMETERS), U.N.O.
2. WELD SIZESHALL BE AISC MINIMUM OF 6 mm UNLESS NOTED OTHERWISE.
3. ALL FIELD WELDS SHALL BE INSPECTED PER QUALITY ASSURANCE AND SPECIAL INSPECTIONS.

REFERENCE DRAWINGS

1	93M-BOA-NAT-LOT-04833
2	93M-BOA-NAT-LOT-09170
3	93M-BOA-NAT-LOT-01976
4	93M-BOA-NAT-LOT-20021
5	
6	
7	
8	
9	

6TH OF OCTOBER CITY RAIL TRANSIT MONORAIL

The Authority — Hill International Consultant — Main Contractor — Structural Designer

KEY PLAN:

REV	DATE	DSG	CHK	APP	AMENDMENTS	STATUS
B	08/29/2023	MAH	MAH	DRAW	ISSUED FOR INFORMATION	IFI
A	08/11/2022	MAH	MAH	DRAW	ISSUED FOR INFORMATION	IFI

SCALE: AS SHOWN | SHOP DRAWING | DATE: 08/29/2023

DRAWING TITLE: 6TH OF OCTOBER MONORAIL SERVICE WALKWAYS ZONE(1016) W836

Project Code	Rubric	Initiator	Lot	Ref	Number	Revision
93M	0476	ACC	60DEP	DWG	16302	B

Approval is subject to approval of coordination package between multi-discipline.

REVIEWED WITH COMMENT
MONORAILS PROJECT

Length & Area & Weight per piece						
W835	PL10*25	S355JR	10	79.6	0.01	0.1
Mark	Profile	Grade	QTY	Length	Area	Weight

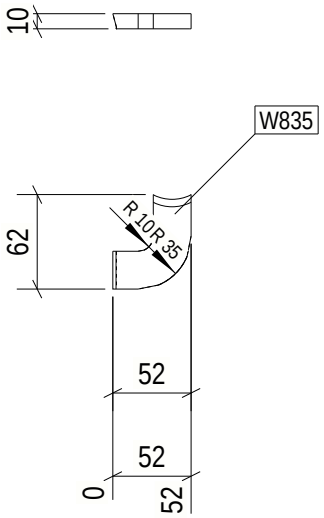

10 REQ'D AS DRAWN MK'D W835

6 October Monorail
Engineering Unit
Valid For Construction

GENERAL NOTES:

1. THE DIMENSIONS SHOWN ARE NOMINAL (IN MILLIMETERS), U.N.O.
2. WELD SIZESHALL BE AISC MINIMUM OF 6 mm UNLESS NOTED OTHERWISE.
3. ALL FIELD WELDS SHALL BE INSPECTED PER QUALITY ASSURANCE AND SPECIAL INSPECTIONS.

REFERENCE DRAWINGS

1	93M-BOA-NAT-LOT-04833
2	93M-BOA-NAT-LOT-09170
3	93M-BOA-NAT-LOT-01976
4	93M-BOA-NAT-LOT-20021
5	
6	
7	
8	
9	

6TH OF OCTOBER CITY RAIL TRANSIT MONORAIL

The Authority | Hill International Consultant | Main Contractor | Structural Designer

KEY PLAN:

SCALE: AS SHOWN | SHOP DRAWING | DATE: 08/29/2023

DRAWING TITLE: 6TH OF OCTOBER MONORAIL SERVICE WALKWAYS ZONE(1016) W835

REV	DATE	DSG	CHK	APP	AMENDMENTS	STATUS
B	08/29/2023	MAH	MAH	DRAW	ISSUED FOR INFORMATION	IFI
A	08/11/2022	MAH	MAH	DRAW	ISSUED FOR INFORMATION	IFI

Project Code	Rubric	Initiator	Lot	Ref	Number	Revision
9 3 M	0 4 7 6	A C C	6 0 D E P	D W G	1 6 3 0 3	B

Tekla structures

Approval is subject to approval of coordination package between multi-discipline.

REVIEWED WITH COMMENT
MONORAILS PROJECT

Length & Area & Weight per piece						
W834	PL10*25	S355JR	1	82.6	0.01	0.1
Mark	Profile	Grade	QTY	Length	Area	Weight

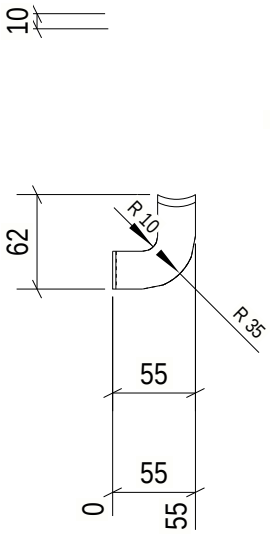

1 REQ'D AS DRAWN MK'D W834

6 October Monorail
Engineering Unit
Valid For Construction

GENERAL NOTES:

1. THE DIMENSIONS SHOWN ARE NOMINAL (IN MILLIMETERS), U.N.O.
2. WELD SIZESHALL BE AISC MINIMUM OF 6 mm UNLESS NOTED OTHERWISE.
3. ALL FIELD WELDS SHALL BE INSPECTED PER QUALITY ASSURANCE AND SPECIAL INSPECTIONS.

REFERENCE DRAWINGS

1	93M-BOA-NAT-LOT-04833
2	93M-BOA-NAT-LOT-09170
3	93M-BOA-NAT-LOT-01976
4	93M-BOA-NAT-LOT-20021
5	
6	
7	
8	
9	

6TH OF OCTOBER CITY RAIL TRANSIT MONORAIL

The Authority | Hill International Consultant | Main Contractor | Structural Designer

KEY PLAN:

SCALE	SHOP DRAWING	DATE
AS SHOWN		08/29/2023

DRAWING TITLE
6TH OF OCTOBER MONORAIL
SERVICE WALKWAYS
ZONE(1016)
W834

REV	DATE	DSG	CHK	APP	AMENDMENTS	STATUS
B	08/29/2023	MAH	MAH	DRAW	ISSUED FOR INFORMATION	IFI
A	08/11/2022	MAH	MAH	DRAW	ISSUED FOR INFORMATION	IFI

Project Code	Rubric	Initiator	Lot	Ref	Number	Revision
9 3 M	0 4 7 6	A C C	6 0 D E P	D W G	1 6 3 0 4	B

Tekla structures

Approval is subject to approval of coordination package between multi-discipline.

REVIEWED WITH COMMENT
MONORAILS PROJECT

Length & Area & Weight per piece						
W832	PL10*25	S355JR	2	84.3	0.01	0.2
Mark	Profile	Grade	QTY	Length	Area	Weight

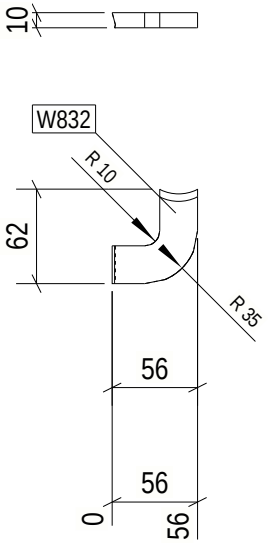

2 REQ'D AS DRAWN MK'D W832

6 October Monorail
Engineering Unit
Valid For Construction

GENERAL NOTES:

1. THE DIMENSIONS SHOWN ARE NOMINAL (IN MILLIMETERS), U.N.O.
2. WELD SIZESHALL BE AISC MINIMUM OF 6 mm UNLESS NOTED OTHERWISE.
3. ALL FIELD WELDS SHALL BE INSPECTED PER QUALITY ASSURANCE AND SPECIAL INSPECTIONS.

REFERENCE DRAWINGS

1	93M-BOA-NAT-LOT-04833
2	93M-BOA-NAT-LOT-09170
3	93M-BOA-NAT-LOT-01976
4	93M-BOA-NAT-LOT-20021
5	
6	
7	
8	
9	

6TH OF OCTOBER CITY RAIL TRANSIT MONORAIL

The Authority — Hill International Consultant — Main Contractor — Structural Designer

KEY PLAN:

SCALE: AS SHOWN | SHOP DRAWING | DATE: 08/29/2023

DRAWING TITLE: 6TH OF OCTOBER MONORAIL SERVICE WALKWAYS ZONE(1016) W832

REV	DATE	DSG	CHK	APP	AMENDMENTS	STATUS
B	08/29/2023	MAH	MAH	DRAW	ISSUED FOR INFORMATION	IFI
A	08/11/2022	MAH	MAH	DRAW	ISSUED FOR INFORMATION	IFI

Project Code	Rubric	Initiator	Lot	Ref	Number	Revision
93	M047	6	ACC60	DEP	DWG	16305	B

Tekla structures

Approval is subject to approval of coordination package between multi-discipline.

REVIEWED WITH COMMENT
MONORAILS PROJECT

Length & Area & Weight per piece						
W831	PIPE2SCH40	S235JR	20	25.0	0.01	0.1
Mark	Profile	Grade	QTY	Length	Area	Weight

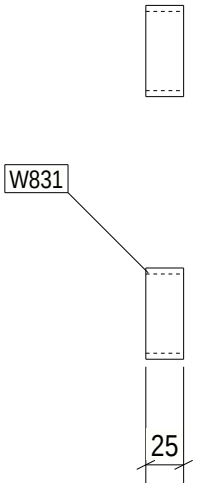

20 REQ'D AS DRAWN MK'D W831

6 October Monorail
Engineering Unit
Valid For Construction

GENERAL NOTES:

1. THE DIMENSIONS SHOWN ARE NOMINAL (IN MILLIMETERS), U.N.O.
2. WELD SIZESHALL BE AISC MINIMUM OF 6 mm UNLESS NOTED OTHERWISE.
3. ALL FIELD WELDS SHALL BE INSPECTED PER QUALITY ASSURANCE AND SPECIAL INSPECTIONS.

REFERENCE DRAWINGS

1	93M-BOA-NAT-LOT-04833
2	93M-BOA-NAT-LOT-09170
3	93M-BOA-NAT-LOT-01976
4	93M-BOA-NAT-LOT-20021
5	
6	
7	
8	
9	

6TH OF OCTOBER CITY RAIL TRANSIT MONORAIL

The Authority — Hill International Consultant — Main Contractor — Structural Designer

KEY PLAN:

SCALE	SHOP DRAWING	DATE
AS SHOWN		08/29/2023

DRAWING TITLE
6TH OF OCTOBER MONORAIL
SERVICE WALKWAYS
ZONE(1016)
W831

REV	DATE	DSG	CHK	APP	AMENDMENTS	STATUS
B	08/29/2023	MAH	MAH	DRAW	ISSUED FOR INFORMATION	IFI
A	08/11/2022	MAH	MAH	DRAW	ISSUED FOR INFORMATION	IFI

Project Code	Rubric	Initiator	Lot	Ref	Number	Revision
93M	0476	ACC	60DEP	DWG	16306	B

Tekla structures

Approval is subject to approval of coordination package between multi-discipline.

REVIEWED WITH COMMENT MONORAILS PROJECT

Length & Area & Weight per piece						
W830	CHS48.3*4.0	S235JR	2	60.4	0.01	0.3
Mark	Profile	Grade	QTY	Length	Area	Weight

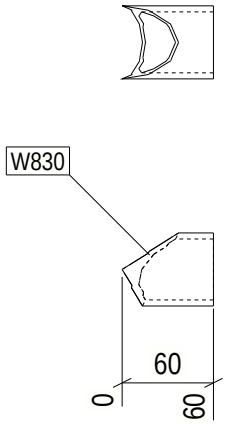

2 REQ'D AS DRAWN MK'D W830

6 October Monorail Engineering Unit Valid For Construction

GENERAL NOTES:

1. THE DIMENSIONS SHOWN ARE NOMINAL (IN MILLIMETERS), U.N.O.
2. WELD SIZESHALL BE AISC MINIMUM OF 6 mm UNLESS NOTED OTHERWISE.
3. ALL FIELD WELDS SHALL BE INSPECTED PER QUALITY ASSURANCE AND SPECIAL INSPECTIONS.

REFERENCE DRAWINGS

1	93M-BOA-NAT-LOT-04833
2	93M-BOA-NAT-LOT-09170
3	93M-BOA-NAT-LOT-01976
4	93M-BOA-NAT-LOT-20021
5	
6	
7	
8	
9	

6TH OF OCTOBER CITY RAIL TRANSIT MONORAIL

The Authority | Hill International Consultant | Main Contractor | Structural Designer

KEY PLAN:

SCALE: AS SHOWN | SHOP DRAWING | DATE: 08/29/2023

DRAWING TITLE: 6TH OF OCTOBER MONORAIL SERVICE WALKWAYS ZONE(1016) W830

REV	DATE	DSG	CHK	APP	AMENDMENTS	STATUS
B	08/29/2023	MAH	MAH	DRAW	ISSUED FOR INFORMATION	IFI
A	08/11/2022	MAH	MAH	DRAW	ISSUED FOR INFORMATION	IFI

Project Code	Rubric	Initiator	Lot	Ref	Number	Revision
93M	0476	ACC60	DEP	DWG	16307	B

Tekla structures

Approval is subject to approval of coordination package between multi-discipline.

REVIEWED WITH COMMENT
MONORAILS PROJECT

Length & Area & Weight per piece						
W828	CHS48.3*4.0	S235JR	6	301.4	0.05	1.3
Mark	Profile	Grade	QTY	Length	Area	Weight

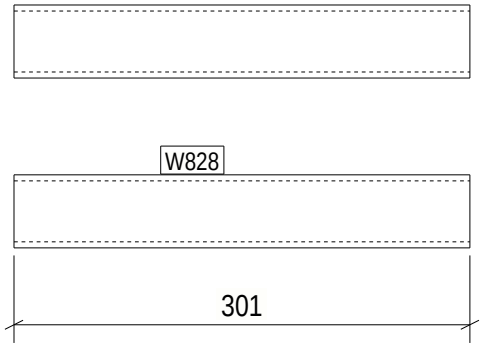

6 REQ'D AS DRAWN MK'D W828

6 October Monorail
Engineering Unit
Valid For Construction

Tekla structures

GENERAL NOTES:

1. THE DIMENSIONS SHOWN ARE NOMINAL (IN MILLIMETERS), U.N.O.
2. WELD SIZESHALL BE AISC MINIMUM OF 6 mm UNLESS NOTED OTHERWISE.
3. ALL FIELD WELDS SHALL BE INSPECTED PER QUALITY ASSURANCE AND SPECIAL INSPECTIONS.

REFERENCE DRAWINGS

1	93M-BOA-NAT-LOT-04833
2	93M-BOA-NAT-LOT-09170
3	93M-BOA-NAT-LOT-01976
4	93M-BOA-NAT-LOT-20021
5	
6	
7	
8	
9	

6TH OF OCTOBER CITY RAIL TRANSIT MONORAIL

The Authority | Hill International Consultant | Main Contractor | Structural Designer

KEY PLAN:

SCALE	SHOP DRAWING	DATE
AS SHOWN		08/29/2023

DRAWING TITLE
6TH OF OCTOBER MONORAIL
SERVICE WALKWAYS
ZONE(1016)
W828

REV	DATE	DSG	CHK	APP	AMENDMENTS	STATUS
B	08/29/2023	MAH	MAH	DRAW	ISSUED FOR INFORMATION	IFI
A	08/11/2022	MAH	MAH	DRAW	ISSUED FOR INFORMATION	IFI

Project Code	Rubric	Initiator	Lot	Ref	Number	Revision
93M	0476	ACC	60DEP	DWG	16308	B

Approval is subject to approval of coordination package between multi-discipline.

REVIEWED WITH COMMENT
MONORAILS PROJECT

Length & Area & Weight per piece						
W827	CHS48.3*4.0	S235JR	2	776.5	0.12	3.4
Mark	Profile	Grade	QTY	Length	Area	Weight

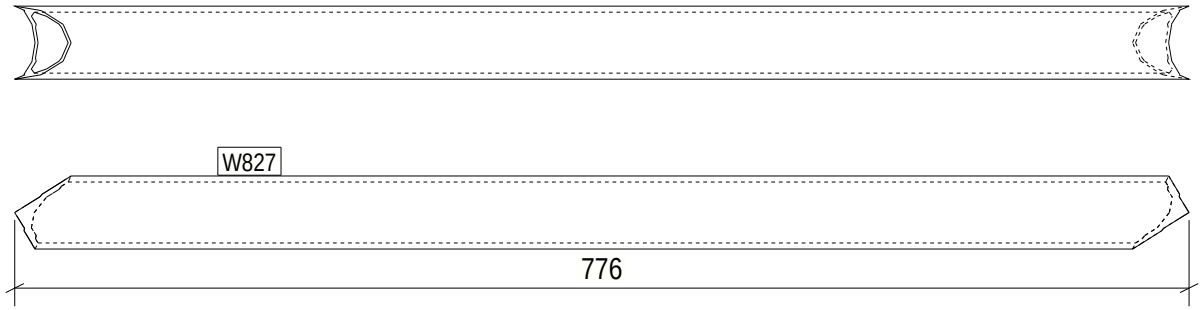

2 REQ'D AS DRAWN MK'D W827

6 October Monorail
Engineering Unit
Valid For Construction

Tekla structures

GENERAL NOTES:

1. THE DIMENSIONS SHOWN ARE NOMINAL (IN MILLIMETERS), U.N.O.
2. WELD SIZESHALL BE AISC MINIMUM OF 6 mm UNLESS NOTED OTHERWISE.
3. ALL FIELD WELDS SHALL BE INSPECTED PER QUALITY ASSURANCE AND SPECIAL INSPECTIONS.

REFERENCE DRAWINGS

1	93M-BOA-NAT-LOT-04833
2	93M-BOA-NAT-LOT-09170
3	93M-BOA-NAT-LOT-01976
4	93M-BOA-NAT-LOT-20021
5	
6	
7	
8	
9	

6TH OF OCTOBER CITY RAIL TRANSIT MONORAIL

The Authority | Hill International Consultant | Main Contractor | Structural Designer

KEY PLAN:

SCALE: AS SHOWN | SHOP DRAWING | DATE: 08/29/2023

DRAWING TITLE: 6TH OF OCTOBER MONORAIL SERVICE WALKWAYS ZONE(1016) W827

REV	DATE	DSG	CHK	APP	AMENDMENTS	STATUS
B	08/29/2023	MAH	MAH	DRAW	ISSUED FOR INFORMATION	IFI
A	08/11/2022	MAH	MAH	DRAW	ISSUED FOR INFORMATION	IFI

Project Code	Rubric	Initiator	Lot	Ref	Number	Revision
9 3 M	0 4 7 6	A C C	6 0 D E P	D W G	1 6 3 0 9	B

Approval is subject to approval of coordination package between multi-discipline.

REVIEWED WITH COMMENT
MONORAILS PROJECT

Length & Area & Weight per piece						
W826	CHS48.3*4.0	S235JR	2	702.1	0.11	3.1
Mark	Profile	Grade	QTY	Length	Area	Weight

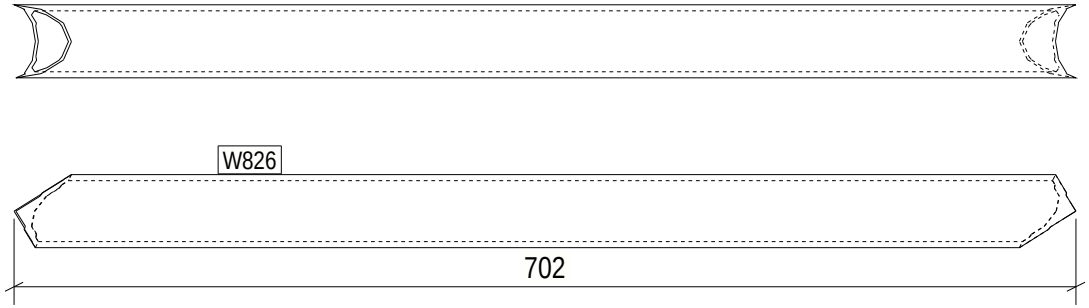

2 REQ'D AS DRAWN MK'D W826

6 October Monorail
Engineering Unit
Valid For Construction

Tekla structures

GENERAL NOTES:

1. THE DIMENSIONS SHOWN ARE NOMINAL (IN MILLIMETERS), U.N.O.
2. WELD SIZESHALL BE AISC MINIMUM OF 6 mm UNLESS NOTED OTHERWISE.
3. ALL FIELD WELDS SHALL BE INSPECTED PER QUALITY ASSURANCE AND SPECIAL INSPECTIONS.

REFERENCE DRAWINGS

1	93M-BOA-NAT-LOT-04833
2	93M-BOA-NAT-LOT-09170
3	93M-BOA-NAT-LOT-01976
4	93M-BOA-NAT-LOT-20021
5	
6	
7	
8	
9	

6TH OF OCTOBER CITY RAIL TRANSIT MONORAIL

The Authority | Hill International Consultant | Main Contractor | Structural Designer

KEY PLAN:

SCALE: AS SHOWN | SHOP DRAWING | DATE: 08/29/2023

DRAWING TITLE: 6TH OF OCTOBER MONORAIL SERVICE WALKWAYS ZONE(1016) W826

REV	DATE	DSG	CHK	APP	AMENDMENTS	STATUS
B	08/29/2023	MAH	MAH	DRAW	ISSUED FOR INFORMATION	IFI
A	08/11/2022	MAH	MAH	DRAW	ISSUED FOR INFORMATION	IFI

Project Code	Rubric	Initiator	Lot	Ref	Number	Revision
93M	0476	ACC60	DEP	DWG	1631	0 B

Approval is subject to approval of coordination package between multi-discipline.

REVIEWED WITH COMMENT
MONORAILS PROJECT

Length & Area & Weight per piece						
W825	CHS48.3*4.0	S235JR	2	1047.1	0.16	4.6
Mark	Profile	Grade	QTY	Length	Area	Weight

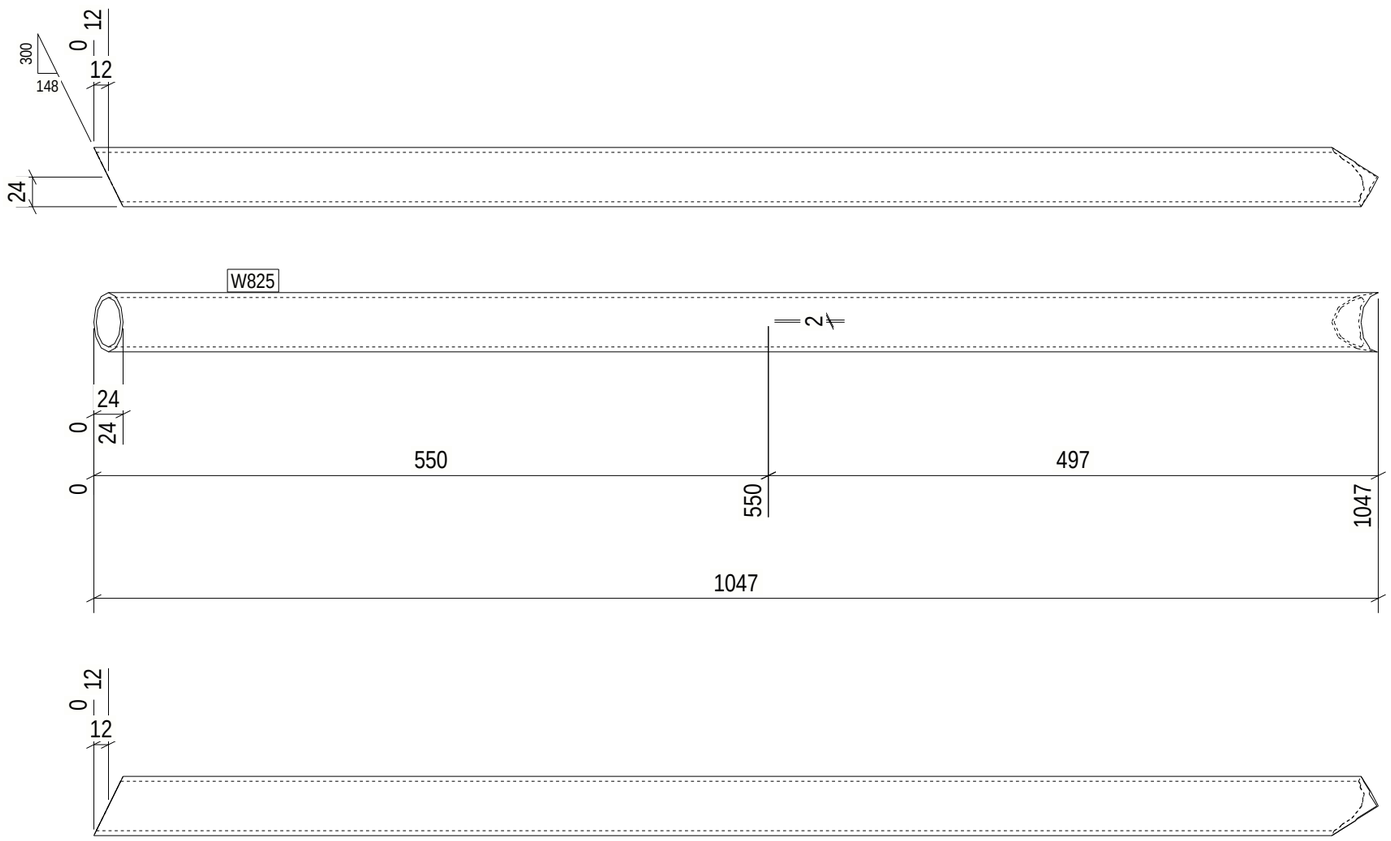

2 REQ'D AS DRAWN MK'D W825

GENERAL NOTES:

1. THE DIMENSIONS SHOWN ARE NOMINAL (IN MILLIMETERS), U.N.O.
2. WELD SIZESHALL BE AISC MINIMUM OF 6 mm UNLESS NOTED OTHERWISE.
3. ALL FIELD WELDS SHALL BE INSPECTED PER QUALITY ASSURANCE AND SPECIAL INSPECTIONS.

REFERENCE DRAWINGS

1	93M-BOA-NAT-LOT-04833
2	93M-BOA-NAT-LOT-09170
3	93M-BOA-NAT-LOT-01976
4	93M-BOA-NAT-LOT-20021
5	
6	
7	
8	
9	

6TH OF OCTOBER CITY RAIL TRANSIT MONORAIL

The Authority — Hill International Consultant — Main Contractor — Structural Designer

KEY PLAN:

6 October Monorail
Engineering Unit
Valid For Construction

SCALE	SHOPDRAWING	DATE
AS SHOWN		09/29/2023

REV	DATE	DSG.	CHK.	APP.	AMENDMENTS	STATUS
B	08/29/2023	M.KH	M.KH	DR.M.M	ISSUED FOR INFORMATION	IFI
A	09/21/2022	M.KH	M.KH	DR.M.M	ISSUED FOR INFORMATION	IFI

DRAWING TITLE

6TH OF OCTOBER MONORAIL
SERVICE WALKWAYS
ZONE(1016)
W825

Project Code	Rubric	Initiator	Lot	Ref	Number	Revision
93M	0476	ACC60DEP	DWG	16311	B

Tekla structures

Approval is subject to approval of coordination package between multi-discipline.

REVIEWED WITH COMMENT
MONORAILS PROJECT

Length & Area & Weight per piece						
W824	CHS48.3*4.0	S235JR	2	297.0	0.04	1.3
Mark	Profile	Grade	QTY	Length	Area	Weight

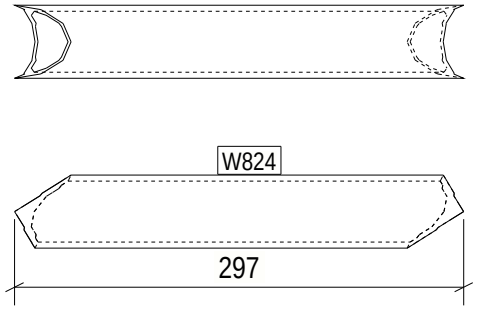

2 REQ'D AS DRAWN MK'D W824

6 October Monorail
Engineering Unit
Valid For Construction

Tekla structures

GENERAL NOTES:

1. THE DIMENSIONS SHOWN ARE NOMINAL (IN MILLIMETERS), U.N.O.
2. WELD SIZESHALL BE AISC MINIMUM OF 6 mm UNLESS NOTED OTHERWISE.
3. ALL FIELD WELDS SHALL BE INSPECTED PER QUALITY ASSURANCE AND SPECIAL INSPECTIONS.

REFERENCE DRAWINGS

1	93M-BOA-NAT-LOT-04833
2	93M-BOA-NAT-LOT-09170
3	93M-BOA-NAT-LOT-01976
4	93M-BOA-NAT-LOT-20021
5	
6	
7	
8	
9	

6TH OF OCTOBER CITY RAIL TRANSIT MONORAIL

The Authority | Hill International Consultant | Main Contractor | Structural Designer

KEY PLAN:

SCALE	SHOP DRAWING	DATE
AS SHOWN		08/29/2023

DRAWING TITLE

6TH OF OCTOBER MONORAIL
SERVICE WALKWAYS
ZONE(1016)
W824

REV	DATE	DSG	CHK	APP	AMENDMENTS	STATUS
B	08/29/2023	MAH	MAH	DRAW	ISSUED FOR INFORMATION	IFI
A	08/11/2022	MAH	MAH	DRAW	ISSUED FOR INFORMATION	IFI

Project Code	Rubric	Initiator	Lot	Ref	Number	Revision
9 3 M	0 4 7 6	A C C	6 0 D E P	D W G	1 6 3 1 2	B

Approval is subject to approval of coordination package between multi-discipline.

REVIEWED WITH COMMENT MONORAILS PROJECT

Length & Area & Weight per piece						
W823	ROD12	S355JR	21	901.1	0.03	0.7
Mark	Profile	Grade	QTY	Length	Area	Weight

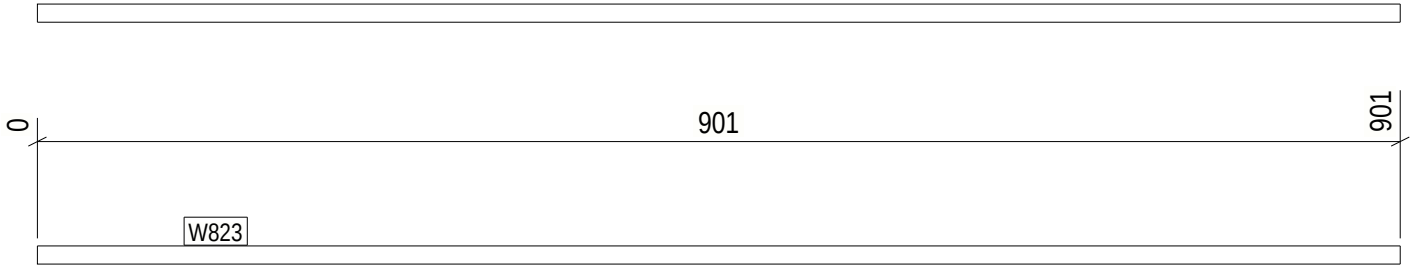

21 REQ'D AS DRAWN MK'D W823

6 October Monorail Engineering Unit Valid For Construction

Tekla structures

GENERAL NOTES:

1. THE DIMENSIONS SHOWN ARE NOMINAL (IN MILLIMETERS), U.N.O.
2. WELD SIZESHALL BE AISC MINIMUM OF 6 mm UNLESS NOTED OTHERWISE.
3. ALL FIELD WELDS SHALL BE INSPECTED PER QUALITY ASSURANCE AND SPECIAL INSPECTIONS.

REFERENCE DRAWINGS

1	93M-BOA-NAT-LOT-04833
2	93M-BOA-NAT-LOT-09170
3	93M-BOA-NAT-LOT-01976
4	93M-BOA-NAT-LOT-20021
5	
6	
7	
8	
9	

6TH OF OCTOBER CITY RAIL TRANSIT MONORAIL

The Authority | Hill International Consultant | Main Contractor | Structural Designer

KEY PLAN:

SCALE: AS SHOWN | SHOP DRAWING | DATE: 08/29/2023

DRAWING TITLE: 6TH OF OCTOBER MONORAIL SERVICE WALKWAYS ZONE(1016) W823

REV	DATE	DSG	CHK	APP	AMENDMENTS	STATUS
B	08/29/2023	MAH	MAH	DRAW	ISSUED FOR INFORMATION	IFI
A	08/11/2022	MAH	MAH	DRAW	ISSUED FOR INFORMATION	IFI

Project Code	Rubric	Initiator	Lot	Ref	Number	Revision
9 3 M	0 4 7 6	A C C	6 0 D E P	D W G	1 6 3 1 3	B

Approval is subject to approval of coordination package between multi-discipline.

REVIEWED WITH COMMENT MONORAILS PROJECT

Length & Area & Weight per piece						
W822	CHS48.3*4.0	S235JR	2	63.3	0.01	0.3
Mark	Profile	Grade	QTY	Length	Area	Weight

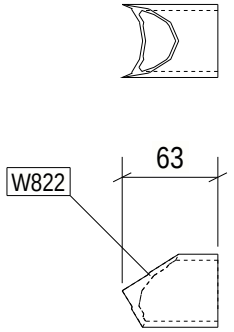

2 REQ'D AS DRAWN MK'D W822

6 October Monorail Engineering Unit
Valid For Construction

GENERAL NOTES:

1. THE DIMENSIONS SHOWN ARE NOMINAL (IN MILLIMETERS), U.N.O.
2. WELD SIZESHALL BE AISC MINIMUM OF 6 mm UNLESS NOTED OTHERWISE.
3. ALL FIELD WELDS SHALL BE INSPECTED PER QUALITY ASSURANCE AND SPECIAL INSPECTIONS.

REFERENCE DRAWINGS

1	93M-BOA-NAT-LOT-04833
2	93M-BOA-NAT-LOT-09170
3	93M-BOA-NAT-LOT-01976
4	93M-BOA-NAT-LOT-20021
5	
6	
7	
8	
9	

6TH OF OCTOBER CITY RAIL TRANSIT MONORAIL

The Authority | Hill International Consultant | Main Contractor | Structural Designer

KEY PLAN:

SCALE	SHOP DRAWING	DATE
AS SHOWN		08/29/2023

REV	DATE	DSG.	CHK.	APP.	AMENDMENTS	STATUS
B	08/29/2023	MKH	MKH	DR.MW	ISSUED FOR INFORMATION	IFI
A	08/21/2022	MKH	MKH	DR.MW	ISSUED FOR INFORMATION	IFI

DRAWING TITLE

6TH OF OCTOBER MONORAIL SERVICE WALKWAYS ZONE(1016)
W822

Project Code	Rubric	Initiator	Lot	Ref	Number	Revision
93M	0476	ACC	60DEP	DWG	1634	B

Tekla structures

Approval is subject to approval of coordination package between multi-discipline.

REVIEWED WITH COMMENT
MONORAILS PROJECT

Length & Area & Weight per piece						
W820	CHS48.3*4.0	S235JR	6	330.3	0.05	1.4
Mark	Profile	Grade	QTY	Length	Area	Weight

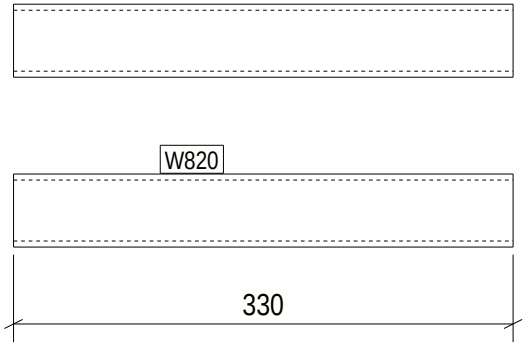

6 REQ'D AS DRAWN MK'D W820

6 October Monorail
Engineering Unit
Valid For Construction

Tekla structures

GENERAL NOTES:

1. THE DIMENSIONS SHOWN ARE NOMINAL (IN MILLIMETERS), U.N.O.
2. WELD SIZESHALL BE AISC MINIMUM OF 6 mm UNLESS NOTED OTHERWISE.
3. ALL FIELD WELDS SHALL BE INSPECTED PER QUALITY ASSURANCE AND SPECIAL INSPECTIONS.

REFERENCE DRAWINGS

1	93M-BOA-NAT-LOT-04833
2	93M-BOA-NAT-LOT-09170
3	93M-BOA-NAT-LOT-01976
4	93M-BOA-NAT-LOT-20021
5	
6	
7	
8	
9	

6TH OF OCTOBER CITY RAIL TRANSIT MONORAIL

The Authority | Hill International Consultant | Main Contractor | Structural Designer

KEY PLAN:

SCALE	SHOP DRAWING	DATE
AS SHOWN		08/29/2023

DRAWING TITLE

6TH OF OCTOBER MONORAIL
SERVICE WALKWAYS
ZONE(1016)
W820

REV	DATE	DSG	CHK	APP	AMENDMENTS	STATUS
B	08/29/2023	MAH	MAH	DRAW	ISSUED FOR INFORMATION	IFI
A	06/11/2022	MAH	MAH	DRAW	ISSUED FOR INFORMATION	IFI

Project Code	Rubric	Initiator	Lot	Ref	Number	Revision
9 3 M	0 4 7 6	A C C	6 0 D E P	D W G	1 6 3 1 5	B

Approval is subject to approval of coordination package between multi-discipline.

REVIEWED WITH COMMENT
MONORAILS PROJECT

Length & Area & Weight per piece						
W819	ROD12	S355JR	24	904.4	0.03	0.7
Mark	Profile	Grade	QTY	Length	Area	Weight

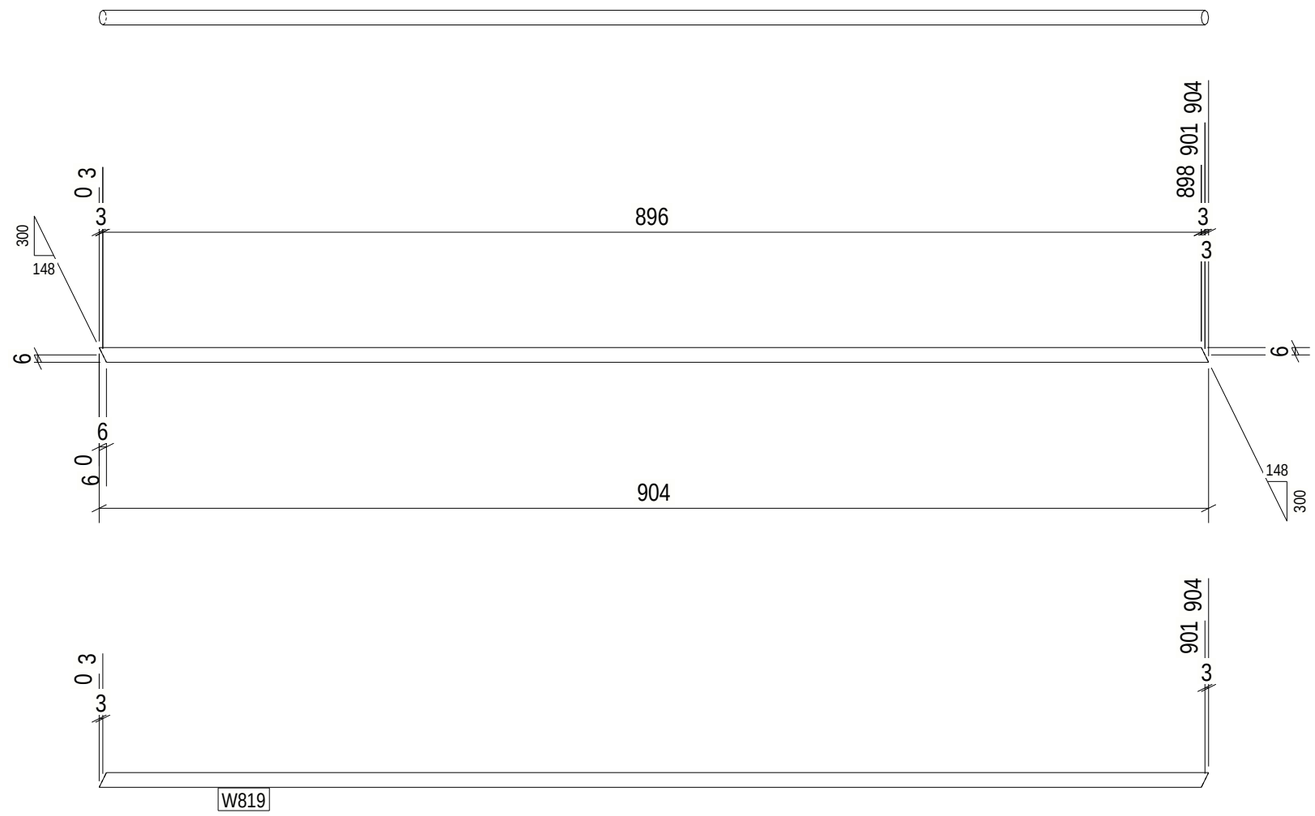

24 REQ'D AS DRAWN MK'D W819

6 October Monorail
Engineering Unit
Valid For Construction

GENERAL NOTES:

1. THE DIMENSIONS SHOWN ARE NOMINAL (IN MILLIMETERS), U.N.O.
2. WELD SIZESHALL BE AISC MINIMUM OF 6 mm UNLESS NOTED OTHERWISE.
3. ALL FIELD WELDS SHALL BE INSPECTED PER QUALITY ASSURANCE AND SPECIAL INSPECTIONS.

REFERENCE DRAWINGS

1	93M-BOA-NAT-LOT-04833
2	93M-BOA-NAT-LOT-09170
3	93M-BOA-NAT-LOT-01976
4	93M-BOA-NAT-LOT-20021
5	
6	
7	
8	
9	

6TH OF OCTOBER CITY RAIL TRANSIT MONORAIL

The Authority | Hill International (Consultant) | Main Contractor | Structural Designer

KEY PLAN:

SCALE	SHOPDRAWING	DATE
AS SHOWN		09/29/2023

REV.	DATE	DSG.	CHK.	APP.	AMENDMENTS	STATUS
B	08/29/2023	M.KH	M.KH	DR.M.M	ISSUED FOR INFORMATION	IFI
A	09/21/2022	M.KH	M.KH	DR.M.M	ISSUED FOR INFORMATION	IFI

DRAWING TITLE
6TH OF OCTOBER MONORAIL
SERVICE WALKWAYS
ZONE(1016)
W819

Project Code	Rubric	Initiator	Lot	Ref	Number	Revision
9 3	M 0 4 7 6	A C C	6 0 D E P	D W G	1 6 3 1 6	B

Tekla structures

Approval is subject to approval of coordination package between multi-discipline.

REVIEWED WITH COMMENT
MONORAILS PROJECT

Length & Area & Weight per piece						
W818	CHS48.3*4.0	S235JR	6	1111.1	0.17	4.9
Mark	Profile	Grade	QTY	Length	Area	Weight

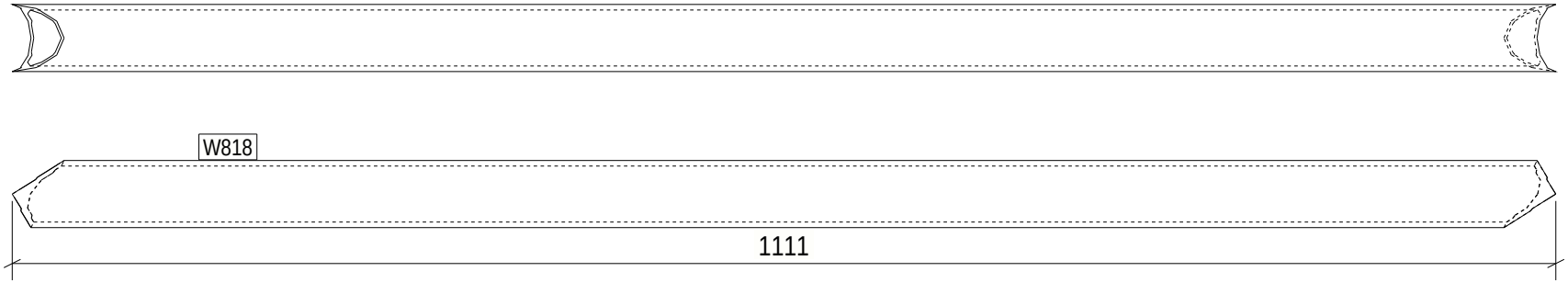

6 REQ'D AS DRAWN MK'D W818

6 October Monorail
Engineering Unit
Valid For Construction

Tekla structures

GENERAL NOTES:

1. THE DIMENSIONS SHOWN ARE NOMINAL (IN MILLIMETERS), U.N.O.
2. WELD SIZESHALL BE AISC MINIMUM OF 6 mm UNLESS NOTED OTHERWISE.
3. ALL FIELD WELDS SHALL BE INSPECTED PER QUALITY ASSURANCE AND SPECIAL INSPECTIONS.

REFERENCE DRAWINGS

1	93M-BOA-NAT-LOT-04833
2	93M-BOA-NAT-LOT-09170
3	93M-BOA-NAT-LOT-01976
4	93M-BOA-NAT-LOT-20021
5	
6	
7	
8	
9	

6TH OF OCTOBER CITY RAIL TRANSIT MONORAIL

The Authority | Hill International Consultant | Main Contractor | Structural Designer

KEY PLAN:

SCALE	SHOP DRAWING	DATE
AS SHOWN		08/29/2023

DRAWING TITLE

6TH OF OCTOBER MONORAIL
SERVICE WALKWAYS
ZONE(1016)
W818

REV	DATE	DSG	CHK	APP	AMENDMENTS	STATUS
B	08/29/2023	MAH	MAH	DRAW	ISSUED FOR INFORMATION	IFI
A	08/11/2022	MAH	MAH	DRAW	ISSUED FOR INFORMATION	IFI

Project Code	Rubric	Initiator	Lot	Ref	Number	Revision
9 3 M	0 4 7 6	A C C	6 0 D E P	D W G	1 6 3 1 7	B

Approval is subject to approval of coordination package between multi-discipline.

REVIEWED WITH COMMENT MONORAILS PROJECT

Length & Area & Weight per piece						
W817	CHS48.3*4.0	S235JR	14	1046.6	0.16	4.6
Mark	Profile	Grade	QTY	Length	Area	Weight

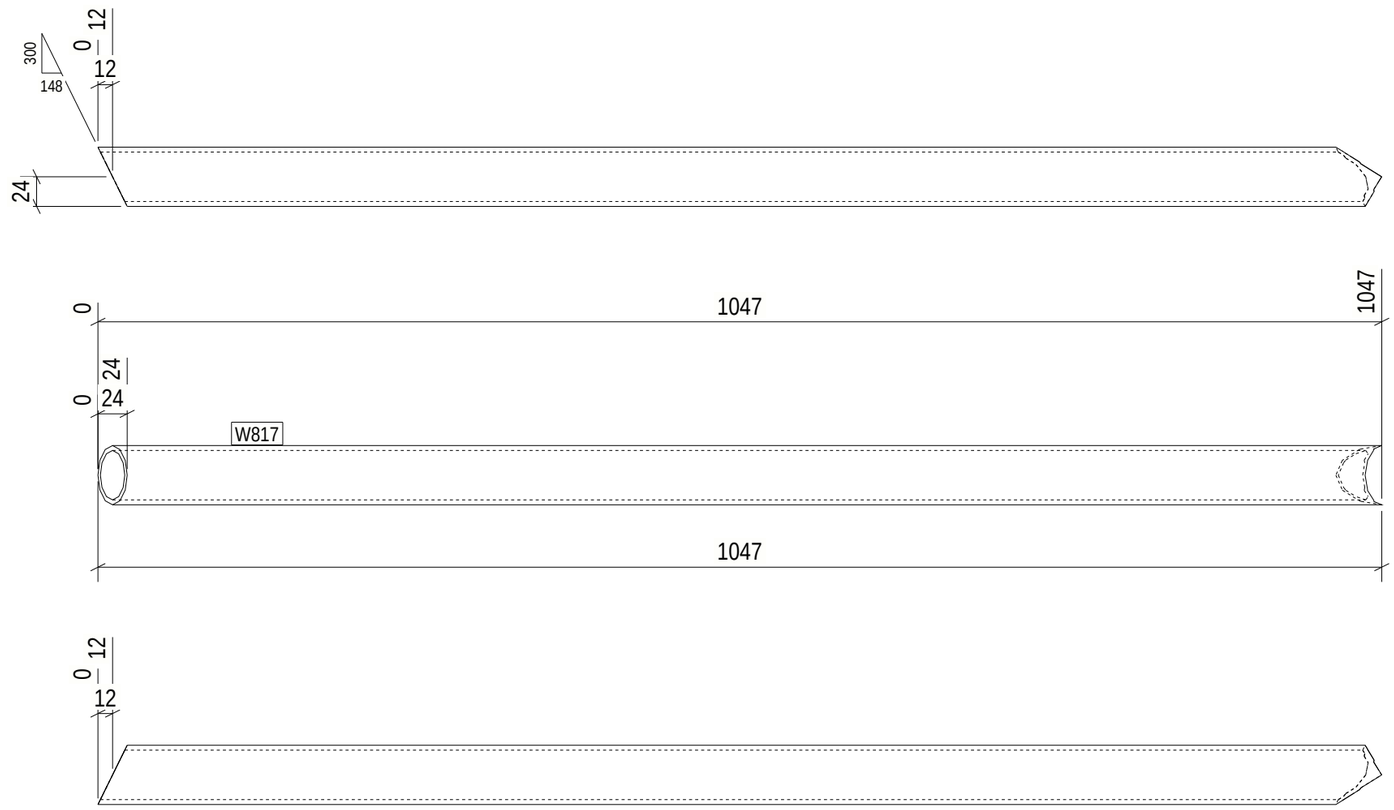

14 REQ'D AS DRAWN MK'D W817

6 October Monorail Engineering Unit
Valid For Construction

GENERAL NOTES:

1. THE DIMENSIONS SHOWN ARE NOMINAL (IN MILLIMETERS), U.N.O.
2. WELD SIZESHALL BE AISC MINIMUM OF 6 mm UNLESS NOTED OTHERWISE.
3. ALL FIELD WELDS SHALL BE INSPECTED PER QUALITY ASSURANCE AND SPECIAL INSPECTIONS.

REFERENCE DRAWINGS

1	93M-BOA-NAT-LOT-04833
2	93M-BOA-NAT-LOT-09170
3	93M-BOA-NAT-LOT-01976
4	93M-BOA-NAT-LOT-20021
5	
6	
7	
8	
9	

6TH OF OCTOBER CITY RAIL TRANSIT MONORAIL

The Authority | Hill International Consultant | ORASCOM BOMBARDIER Main Contractor | INNOVA Structural Designer

KEY PLAN:

SCALE	SHOPDRAWING	DATE
AS SHOWN		09/29/2023

REV	DATE	DSG.	CHK.	APP.	AMENDMENTS	STATUS
B	08/29/2023	M.KH	M.KH	DR.M.M	ISSUED FOR INFORMATION	IFI
A	09/21/2022	M.KH	M.KH	DR.M.M	ISSUED FOR INFORMATION	IFI

DRAWING TITLE

6TH OF OCTOBER MONORAIL SERVICE WALKWAYS ZONE(1016)
W817

Project Code	Rubric	Initiator	Lot	Ref	Number	Revision
93M	0476	ACC	60DEP	DWG	16318	B

Tekla structures

Approval is subject to approval of coordination package between multi-discipline.

REVIEWED WITH COMMENT
MONORAILS PROJECT

Length & Area & Weight per piece						
W816	ROD12	S355JR	66	901.5	0.03	0.7
Mark	Profile	Grade	QTY	Length	Area	Weight

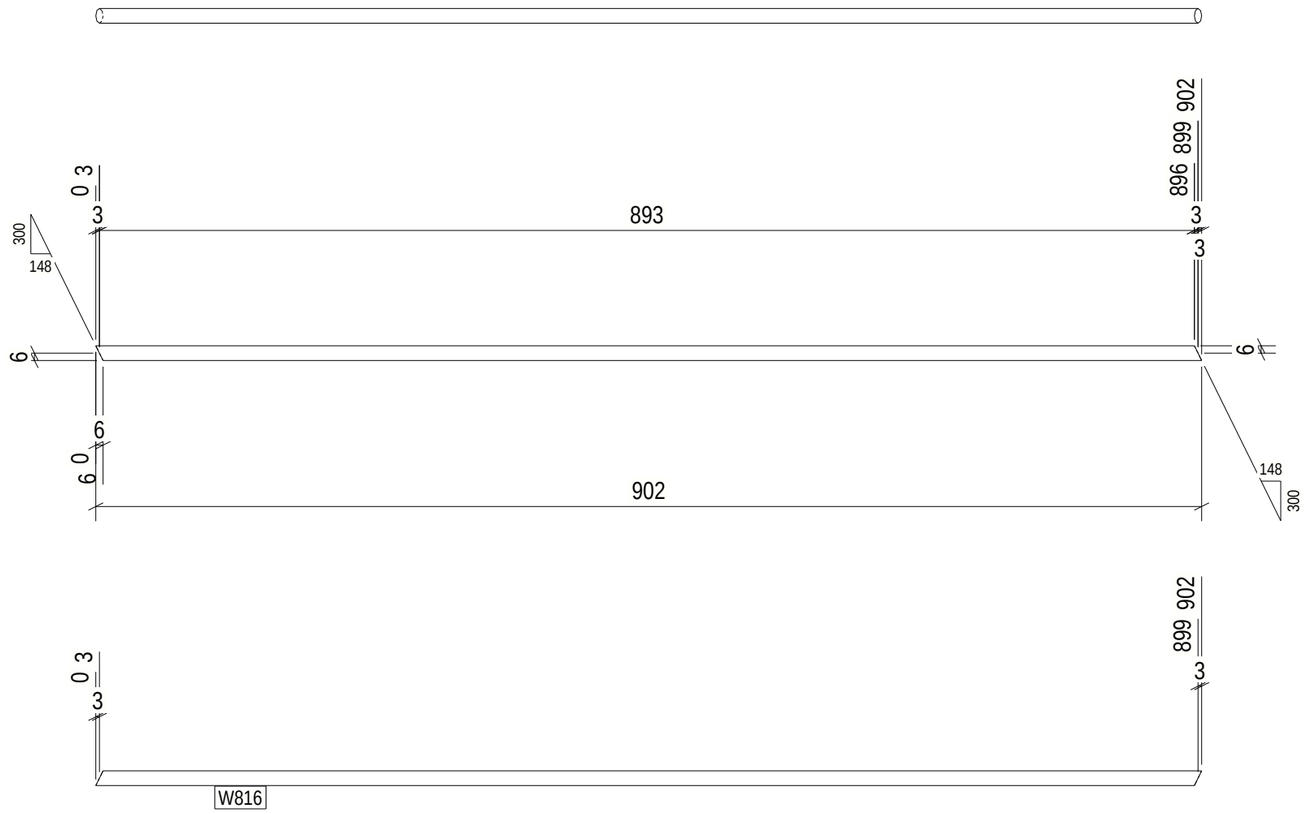

66 REQ'D AS DRAWN MK'D W816

6 October: Monorail
Engineering Unit
Valid For Construction

GENERAL NOTES:

1. THE DIMENSIONS SHOWN ARE NOMINAL (IN MILLIMETERS), U.N.O.
2. WELD SIZESHALL BE AISC MINIMUM OF 6 mm UNLESS NOTED OTHERWISE.
3. ALL FIELD WELDS SHALL BE INSPECTED PER QUALITY ASSURANCE AND SPECIAL INSPECTIONS.

REFERENCE DRAWINGS

1	93M-BOA-NAT-LOT-04833
2	93M-BOA-NAT-LOT-09170
3	93M-BOA-NAT-LOT-01976
4	93M-BOA-NAT-LOT-20021
5	
6	
7	
8	
9	

6TH OF OCTOBER CITY RAIL TRANSIT MONORAIL

The Authority | Consultant: Hill International | Main Contractor: ORASCOM / BOMBARDIER | Structural Designer: INNOVA

KEY PLAN:

SCALE: AS SHOWN | SHOPDRAWING | DATE: 09/29/2023

REV	DATE	DSG.	CHK.	APP.	AMENDMENTS	STATUS
B	08/29/2023	M.KH	M.KH	DR.M.M	ISSUED FOR INFORMATION	IFI
A	09/21/2022	M.KH	M.KH	DR.M.M	ISSUED FOR INFORMATION	IFI

DRAWING TITLE
6TH OF OCTOBER MONORAIL
SERVICE WALKWAYS
ZONE(1016)
W816

Project Code	Rubric	Initiator	Lot	Ref	Number	Revision
9 3 M	0 4 7 6	A C C	6 0 D E P	D W G	1 6 3 1 9	B

Tekla structures

Approval is subject to approval of coordination package between multi-discipline.

REVIEWED WITH COMMENT
MONORAILS PROJECT

Length & Area & Weight per piece						
W815	L70*7	S235JR	2	780.0	0.22	5.7
Mark	Profile	Grade	QTY	Length	Area	Weight

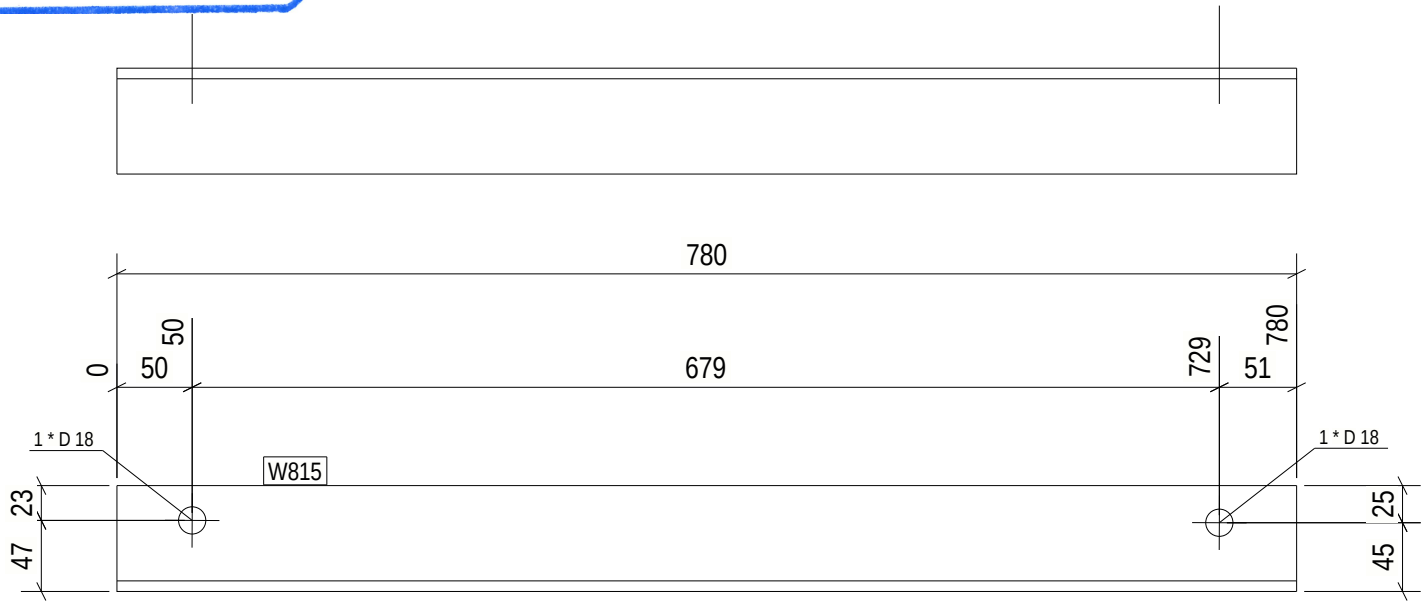

2 REQ'D AS DRAWN MK'D W815

6 October Monorail
Engineering Unit
Valid For Construction

GENERAL NOTES:

1. THE DIMENSIONS SHOWN ARE NOMINAL (IN MILLIMETERS), U.N.O.
2. WELD SIZESHALL BE AISC MINIMUM OF 6 mm UNLESS NOTED OTHERWISE.
3. ALL FIELD WELDS SHALL BE INSPECTED PER QUALITY ASSURANCE AND SPECIAL INSPECTIONS.

REFERENCE DRAWINGS

1	93M-BOA-NAT-LOT-04833
2	93M-BOA-NAT-LOT-09170
3	93M-BOA-NAT-LOT-01976
4	93M-BOA-NAT-LOT-20021
5	
6	
7	
8	
9	

6TH OF OCTOBER CITY RAIL TRANSIT MONORAIL

The Authority | Hill International Consultant | Main Contractor | Structural Designer

KEY PLAN:

SCALE: AS SHOWN | SHOP DRAWING | DATE: 08/29/2023

DRAWING TITLE: 6TH OF OCTOBER MONORAIL SERVICE WALKWAYS ZONE(1016) W815

REV	DATE	DSG	CHK	APP	AMENDMENTS	STATUS
B	08/29/2023	MAH	MAH	DRAW	ISSUED FOR INFORMATION	IFI
A	08/11/2022	MAH	MAH	DRAW	ISSUED FOR INFORMATION	IFI

Project Code	Rubric	Initiator	Lot	Ref	Number	Revision
9 3 M	0 4 7 6	A C C	6 0 D E P	D W G	1 6 3 2 0	B

Tekla structures

Approval is subject to approval of coordination package between multi-discipline.

REVIEWED WITH COMMENT
MONORAILS PROJECT

Length & Area & Weight per piece						
W814	L60*6	S235JR	2	600.0	0.15	3.2
Mark	Profile	Grade	QTY	Length	Area	Weight

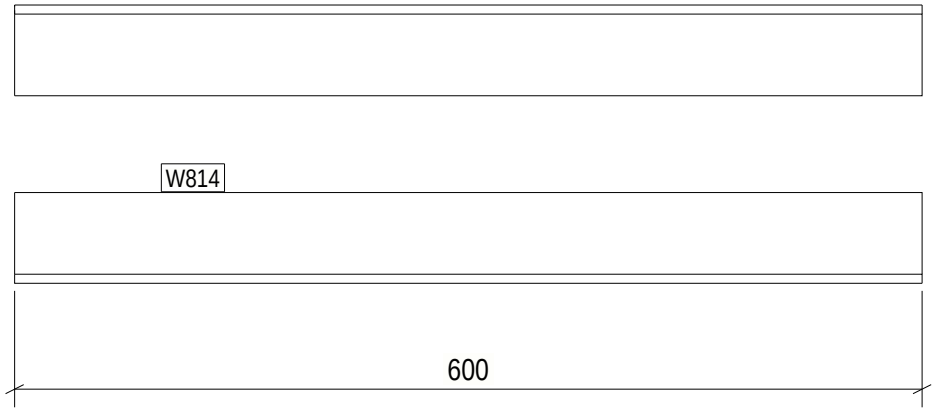

2 REQ'D AS DRAWN MK'D W814

6 October Monorail
Engineering Unit
Valid For Construction

GENERAL NOTES:

1. THE DIMENSIONS SHOWN ARE NOMINAL (IN MILLIMETERS), U.N.O.
2. WELD SIZESHALL BE AISC MINIMUM OF 6 mm UNLESS NOTED OTHERWISE.
3. ALL FIELD WELDS SHALL BE INSPECTED PER QUALITY ASSURANCE AND SPECIAL INSPECTIONS.

REFERENCE DRAWINGS

1	93M-BOA-NAT-LOT-04833
2	93M-BOA-NAT-LOT-09170
3	93M-BOA-NAT-LOT-01976
4	93M-BOA-NAT-LOT-20021
5	
6	
7	
8	
9	

6TH OF OCTOBER CITY RAIL TRANSIT MONORAIL

The Authority | Hill International Consultant | Main Contractor | Structural Designer

KEY PLAN:

SCALE	SHOP DRAWING	DATE
AS SHOWN		08/29/2023

DRAWING TITLE
6TH OF OCTOBER MONORAIL
SERVICE WALKWAYS
ZONE(1016)
W814

REV	DATE	DSG	CHK	APP	AMENDMENTS	STATUS
B	08/29/2023	MAH	MAH	DRAW	ISSUED FOR INFORMATION	IFI
A	08/11/2022	MAH	MAH	DRAW	ISSUED FOR INFORMATION	IFI

Project Code	Rubric	Initiator	Lot	Ref	Number	Revision
9 3 M	0 4 7 6	A C C	6 0 D E P	D W G	1 6 3 2 1	B

Tekla structures

Approval is subject to approval of coordination package between multi-discipline.

REVIEWED WITH COMMENT
MONORAILS PROJECT

Length & Area & Weight per piece						
W813	UPN160	S235JR	2	586.2	0.32	11.0
Mark	Profile	Grade	QTY	Length	Area	Weight

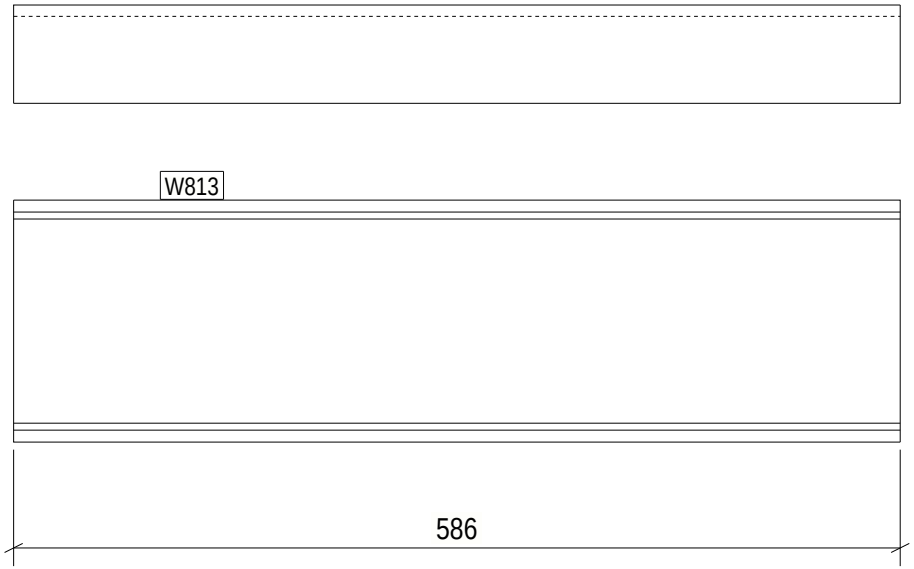

2 REQ'D AS DRAWN MK'D W813

6 October Monorail
Engineering Unit
Valid For Construction

GENERAL NOTES:

1. THE DIMENSIONS SHOWN ARE NOMINAL (IN MILLIMETERS), U.N.O.
2. WELD SIZESHALL BE AISC MINIMUM OF 6 mm UNLESS NOTED OTHERWISE.
3. ALL FIELD WELDS SHALL BE INSPECTED PER QUALITY ASSURANCE AND SPECIAL INSPECTIONS.

REFERENCE DRAWINGS

1	93M-BOA-NAT-LOT-04833
2	93M-BOA-NAT-LOT-09170
3	93M-BOA-NAT-LOT-01976
4	93M-BOA-NAT-LOT-20021
5	
6	
7	
8	
9	

6TH OF OCTOBER CITY RAIL TRANSIT MONORAIL

The Authority — Hill International Consultant — Main Contractor — Structural Designer

KEY PLAN:

SCALE: AS SHOWN | SHOP DRAWING | DATE: 08/29/2023

DRAWING TITLE: 6TH OF OCTOBER MONORAIL SERVICE WALKWAYS ZONE(1016) W813

REV	DATE	DSG	CHK	APP	AMENDMENTS	STATUS
B	08/29/2023	MAH	MAH	DRAW	ISSUED FOR INFORMATION	IFI
A	08/11/2022	MAH	MAH	DRAW	ISSUED FOR INFORMATION	IFI

Project Code	Rubric	Initiator	Lot	Ref	Number	Revision
93M	0476	ACC60	DEP	DWG	1632	B

Tekla structures

Approval is subject to approval of coordination package between multi-discipline.

REVIEWED WITH COMMENT
MONORAILS PROJECT

Length & Area & Weight per piece

Mark	Profile	Grade	QTY	Length	Area	Weight
W812	UPN160	S235JR	2	591.0	0.33	11.1

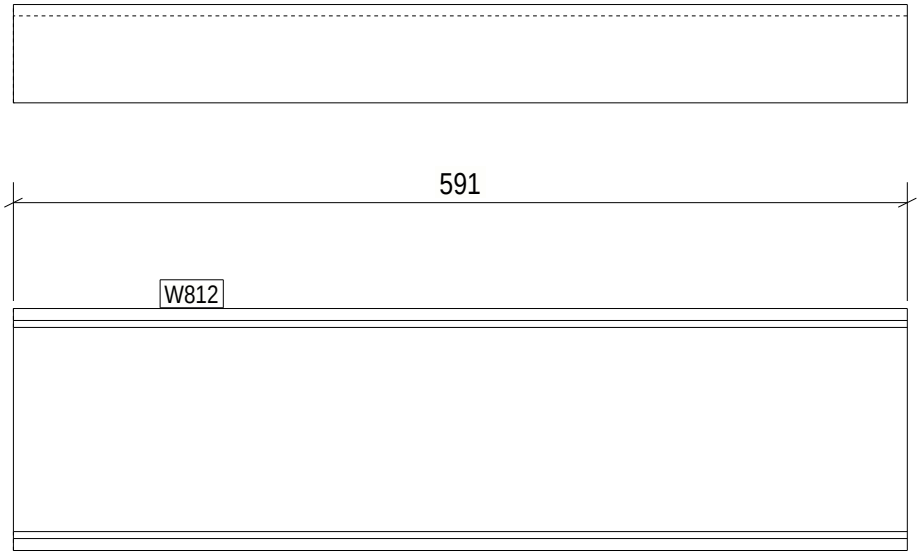

2 REQ'D AS DRAWN MK'D W812

6 October Monorail
Engineering Unit
Valid For Construction

GENERAL NOTES:

1. THE DIMENSIONS SHOWN ARE NOMINAL (IN MILLIMETERS), U.N.O.
2. WELD SIZESHALL BE AISC MINIMUM OF 6 mm UNLESS NOTED OTHERWISE.
3. ALL FIELD WELDS SHALL BE INSPECTED PER QUALITY ASSURANCE AND SPECIAL INSPECTIONS.

REFERENCE DRAWINGS

1	93M-BOA-NAT-LOT-04833
2	93M-BOA-NAT-LOT-09170
3	93M-BOA-NAT-LOT-01976
4	93M-BOA-NAT-LOT-20021
5	
6	
7	
8	
9	

6TH OF OCTOBER CITY RAIL TRANSIT MONORAIL

The Authority — Hill International Consultant — Main Contractor — Structural Designer

KEY PLAN:

SCALE: AS SHOWN | SHOP DRAWING | DATE: 08/29/2023

DRAWING TITLE: 6TH OF OCTOBER MONORAIL SERVICE WALKWAYS ZONE(1016) W812

REV	DATE	DSG	CHK	APP	AMENDMENTS	STATUS
B	08/29/2023	MAH	MAH	DRAW	ISSUED FOR INFORMATION	IFI
A	08/11/2022	MAH	MAH	DRAW	ISSUED FOR INFORMATION	IFI

Project Code	Rubric	Initiator	Lot	Ref	Number	Revision
93M	0476	ACC60	DEP	DWG	1632	B

Tekla structures

Approval is subject to approval of coordination package between multi-discipline.

REVIEWED WITH COMMENT
MONORAILS PROJECT

Length & Area & Weight per piece						
W810	L50*5	S235JR	4	100.0	0.02	0.4
Mark	Profile	Grade	QTY	Length	Area	Weight

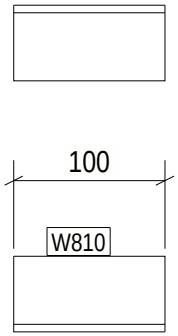

4 REQ'D AS DRAWN MK'D W810

6 October Monorail
Engineering Unit
Valid For Construction

Tekla structures

GENERAL NOTES:

1. THE DIMENSIONS SHOWN ARE NOMINAL (IN MILLIMETERS), U.N.O.
2. WELD SIZESHALL BE AISC MINIMUM OF 6 mm UNLESS NOTED OTHERWISE.
3. ALL FIELD WELDS SHALL BE INSPECTED PER QUALITY ASSURANCE AND SPECIAL INSPECTIONS.

REFERENCE DRAWINGS

1	93M-BOA-NAT-LOT-04833
2	93M-BOA-NAT-LOT-09170
3	93M-BOA-NAT-LOT-01976
4	93M-BOA-NAT-LOT-20021
5	
6	
7	
8	
9	

6TH OF OCTOBER CITY RAIL TRANSIT MONORAIL

The Authority | Hill International Consultant | Main Contractor | Structural Designer

KEY PLAN:

SCALE: AS SHOWN | SHOP DRAWING | DATE: 08/29/2023

DRAWING TITLE: 6TH OF OCTOBER MONORAIL SERVICE WALKWAYS ZONE(1016) W810

REV	DATE	DSG	CHK	APP	AMENDMENTS	STATUS
B	08/29/2023	MAH	MAH	DRAW	ISSUED FOR INFORMATION	IFI
A	08/11/2022	MAH	MAH	DRAW	ISSUED FOR INFORMATION	IFI

Project Code	Rubric	Initiator	Lot	Ref	Number	Revision
9 3 M	0 4 7 6	A C C	6 0 D E P	D W G	1 6 3 2 4	B

Approval is subject to approval of coordination package between multi-discipline.

REVIEWED WITH COMMENT
MONORAILS PROJECT

Length & Area & Weight per piece						
W809	CHQD_PL5*578.7	S235JR	2	590.0	0.69	13.4
Mark	Profile	Grade	QTY	Length	Area	Weight

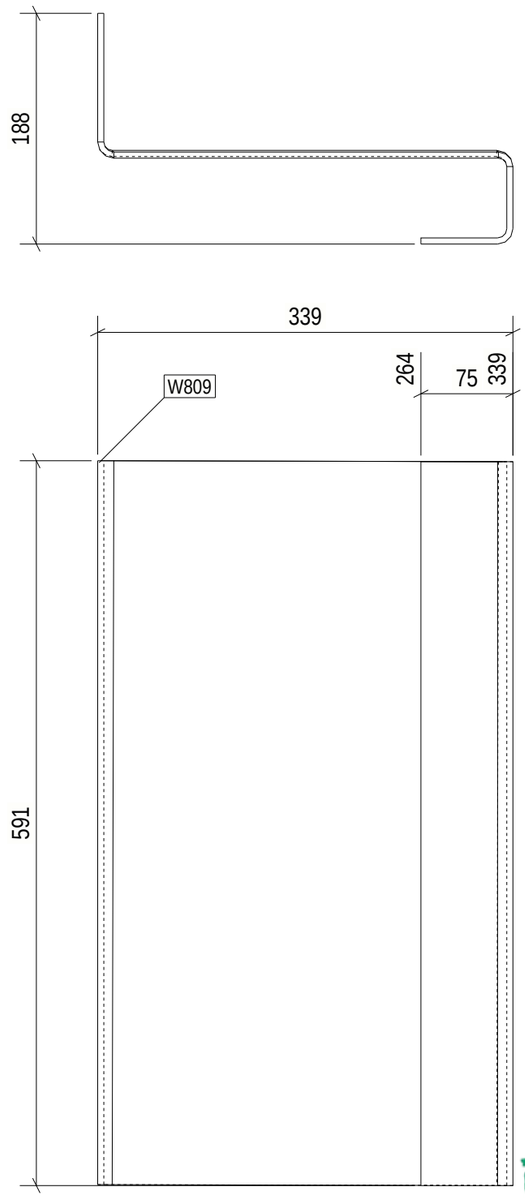

2 REQ'D AS DRAWN MK'D W809

6 October Monorail
Engineering Unit
Valid For Construction

GENERAL NOTES:

1. THE DIMENSIONS SHOWN ARE NOMINAL (IN MILLIMETERS), U.N.O.
2. WELD SIZESHALL BE AISC MINIMUM OF 6 mm UNLESS NOTED OTHERWISE.
3. ALL FIELD WELDS SHALL BE INSPECTED PER QUALITY ASSURANCE AND SPECIAL INSPECTIONS.

REFERENCE DRAWINGS

1	93M-BOA-NAT-LOT-04833
2	93M-BOA-NAT-LOT-09170
3	93M-BOA-NAT-LOT-01976
4	93M-BOA-NAT-LOT-20021
5	
6	
7	
8	
9	

6TH OF OCTOBER CITY RAIL TRANSIT MONORAIL

The Authority | Hill International Consultant | Main Contractor | Structural Designer

KEY PLAN:

SCALE: AS SHOWN | SHOPDRAWING | DATE: 09/29/2023

REV	DATE	DSG.	CHK.	APP.	AMENDMENTS	STATUS
B	08/29/2023	M.KH	M.KH	DR.M.M	ISSUED FOR INFORMATION	IFI
A	09/21/2022	M.KH	M.KH	DR.M.M	ISSUED FOR INFORMATION	IFI

DRAWING TITLE

6TH OF OCTOBER MONORAIL
SERVICE WALKWAYS
ZONE(1016)
W809

Project Code	Rubric	Initiator	Lot	Ref	Number	Revision
93M	0476	ACC	60DE	PDWG	16325	B

Tekla structures

Approval is subject to approval of coordination package between multi-discipline.

REVIEWED WITH COMMENT MONORAILS PROJECT

Length & Area & Weight per piece						
W808	CHQD_PL5*440.7	S235JR	2	590.0	0.53	10.2
Mark	Profile	Grade	QTY	Length	Area	Weight

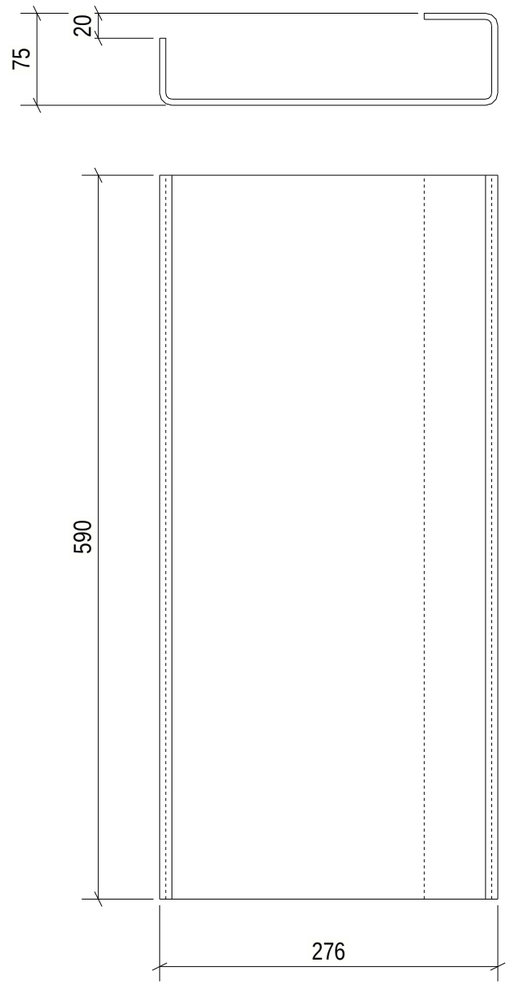

2 REQ'D AS DRAWN MK'D W808

6 October Monorail Engineering Unit
Valid For Construction

GENERAL NOTES:

1. THE DIMENSIONS SHOWN ARE NOMINAL (IN MILLIMETERS), U.N.O.
2. WELD SIZESHALL BE AISC MINIMUM OF 6 mm UNLESS NOTED OTHERWISE.
3. ALL FIELD WELDS SHALL BE INSPECTED PER QUALITY ASSURANCE AND SPECIAL INSPECTIONS.

REFERENCE DRAWINGS

1	93M-BOA-NAT-LOT-04833
2	93M-BOA-NAT-LOT-09170
3	93M-BOA-NAT-LOT-01976
4	93M-BOA-NAT-LOT-20021
5	
6	
7	
8	
9	

6TH OF OCTOBER CITY RAIL TRANSIT MONORAIL

The Authority | Hill International Consultant | ORASCOM BOMBARDIER Main Contractor | INNOVA Structural Designer

KEY PLAN:

SCALE	SHOPDRAWING	DATE
AS SHOWN		09/29/2023

REV	DATE	DSG.	CHK.	APP.	AMENDMENTS	STATUS
B	08/29/2023	M.KH	M.KH	DR.M.M	ISSUED FOR INFORMATION	IFI
A	09/21/2022	M.KH	M.KH	DR.M.M	ISSUED FOR INFORMATION	IFI

DRAWING TITLE

6TH OF OCTOBER MONORAIL SERVICE WALKWAYS ZONE(1016)
W808

Project Code	Rubric	Initiator	Lot	Ref	Number	Revision
93M	0476	ACC	60DEP	DWG	16326	B

Tekla structures

Approval is subject to approval of coordination package between multi-discipline.

REVIEWED WITH COMMENT
MONORAILS PROJECT

Length & Area & Weight per piece						
W807	CHQD_PL5*469.8	S235JR	2	590.0	0.56	10.8
Mark	Profile	Grade	QTY	Length	Area	Weight

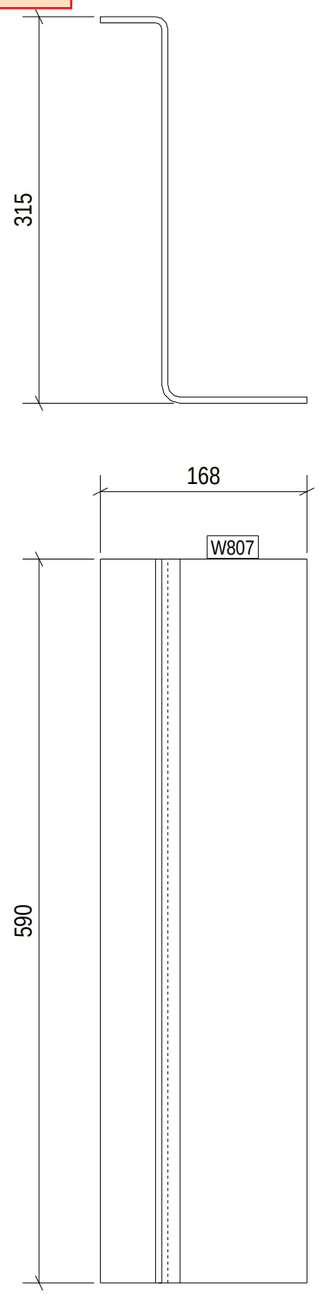

2 REQ'D AS DRAWN MK'D W807

6 October Monorail
Engineering Unit
Valid For Construction

GENERAL NOTES:

1. THE DIMENSIONS SHOWN ARE NOMINAL (IN MILLIMETERS), U.N.O.
2. WELD SIZESHALL BE AISC MINIMUM OF 6 mm UNLESS NOTED OTHERWISE.
3. ALL FIELD WELDS SHALL BE INSPECTED PER QUALITY ASSURANCE AND SPECIAL INSPECTIONS.

REFERENCE DRAWINGS

1	93M-BOA-NAT-LOT-04833
2	93M-BOA-NAT-LOT-09170
3	93M-BOA-NAT-LOT-01976
4	93M-BOA-NAT-LOT-20021
5	
6	
7	
8	
9	

6TH OF OCTOBER CITY RAIL TRANSIT MONORAIL

The Authority | Consultant: Hill International | Main Contractor: ORASCOM CONSTRUCTION, BOMBARDIER | Structural Designer: INNOVA

KEY PLAN:

SCALE	SHOPDRAWING	DATE
AS SHOWN		09/29/2023

REV	DATE	DSG.	CHK.	APP.	AMENDMENTS	STATUS
B	08/29/2023	M.KH	M.KH	DR.M.M	ISSUED FOR INFORMATION	IFI
A	09/21/2022	M.KH	M.KH	DR.M.M	ISSUED FOR INFORMATION	IFI

DRAWING TITLE

6TH OF OCTOBER MONORAIL
SERVICE WALKWAYS
ZONE(1016)
W807

Project Code	Rubric	Initiator	Lot	Ref	Number	Revision
93	M047	6ACC	60DE	P	DWG	16327	B

Tekla structures

Approval is subject to approval of coordination package between multi-discipline.

REVIEWED WITH COMMENT
MONORAILS PROJECT

Length & Area & Weight per piece						
W806	CHQD_PL5*590	S235JR	2	662.9	0.79	15.1
Mark	Profile	Grade	QTY	Length	Area	Weight

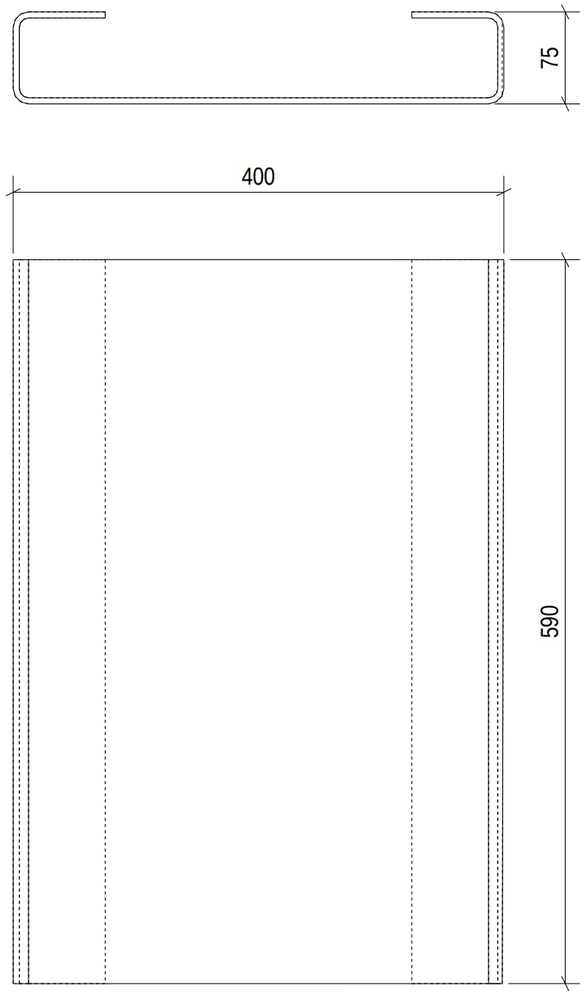

2 REQ'D AS DRAWN MK'D W806

6 October Monorail
Engineering Unit
Valid For Construction

Tekla structures

GENERAL NOTES:

1. THE DIMENSIONS SHOWN ARE NOMINAL (IN MILLIMETERS), U.N.O.
2. WELD SIZESHALL BE AISC MINIMUM OF 6 mm UNLESS NOTED OTHERWISE.
3. ALL FIELD WELDS SHALL BE INSPECTED PER QUALITY ASSURANCE AND SPECIAL INSPECTIONS.

REFERENCE DRAWINGS

1	93M-BOA-NAT-LOT-04833
2	93M-BOA-NAT-LOT-09170
3	93M-BOA-NAT-LOT-01976
4	93M-BOA-NAT-LOT-20021
5	
6	
7	
8	
9	

6TH OF OCTOBER CITY RAIL TRANSIT MONORAIL

The Authority | Consultant: Hill International | Main Contractor: ORASCOM CONSTRUCTION, Six Construct, BOMBARDIER | Structural Designer: INNOVA TRANSPORTATION

KEY PLAN:

SCALE	SHOPDRAWING	DATE
AS SHOWN		09/29/2023

REV.	DATE	DSG.	CHK.	APP.	AMENDMENTS	STATUS
B	08/29/2023	M.KH	M.KH	DR.M.M	ISSUED FOR INFORMATION	IFI
A	09/21/2022	M.KH	M.KH	DR.M.M	ISSUED FOR INFORMATION	IFI

DRAWING TITLE

6TH OF OCTOBER MONORAIL
SERVICE WALKWAYS
ZONE(1016)
W806

Project Code	Rubric	Initiator	Lot	Ref	Number	Revision
93M	0476	ACC60DEP	DWG	16328		B

Approval is subject to approval of coordination package between multi-discipline.

REVIEWED WITH COMMENT
MONORAILS PROJECT

Length & Area & Weight per piece						
W805	L50*5	S235JR	72	200.0	0.04	0.7
Mark	Profile	Grade	QTY	Length	Area	Weight

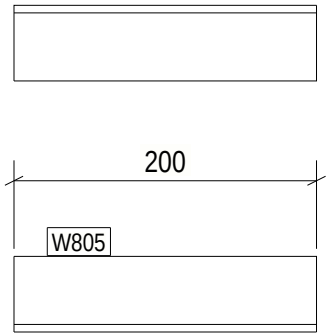

72 REQ'D AS DRAWN MK'D W805

6 October Monorail
Engineering Unit
Valid For Construction

Tekla structures

GENERAL NOTES:

1. THE DIMENSIONS SHOWN ARE NOMINAL (IN MILLIMETERS), U.N.O.
2. WELD SIZESHALL BE AISC MINIMUM OF 6 mm UNLESS NOTED OTHERWISE.
3. ALL FIELD WELDS SHALL BE INSPECTED PER QUALITY ASSURANCE AND SPECIAL INSPECTIONS.

REFERENCE DRAWINGS

1	93M-BOA-NAT-LOT-04833
2	93M-BOA-NAT-LOT-09170
3	93M-BOA-NAT-LOT-01976
4	93M-BOA-NAT-LOT-20021
5	
6	
7	
8	
9	

6TH OF OCTOBER CITY RAIL TRANSIT MONORAIL

The Authority | Hill International Consultant | Main Contractor | Structural Designer

KEY PLAN:

SCALE	SHOP DRAWING	DATE
AS SHOWN		08/29/2023

DRAWING TITLE

6TH OF OCTOBER MONORAIL
SERVICE WALKWAYS
ZONE(1016)
W805

REV	DATE	DSG	CHK	APP	AMENDMENTS	STATUS
B	08/29/2023	MAH	MAH	DRAW	ISSUED FOR INFORMATION	IFI
A	08/21/2022	MAH	MAH	DRAW	ISSUED FOR INFORMATION	IFI

Project Code	Rubric	Initiator	Lot	Ref	Number	Revision
9 3 M	0 4 7 6	A C C	6 0 D E P	D W G	1 6 3 2 9	B

Approval is subject to approval of coordination package between multi-discipline.

REVIEWED WITH COMMENT
MONORAILS PROJECT

Length & Area & Weight per piece						
W804	CHQD_PL5*470	S235JR	26	590.0	0.56	10.9
Mark	Profile	Grade	QTY	Length	Area	Weight

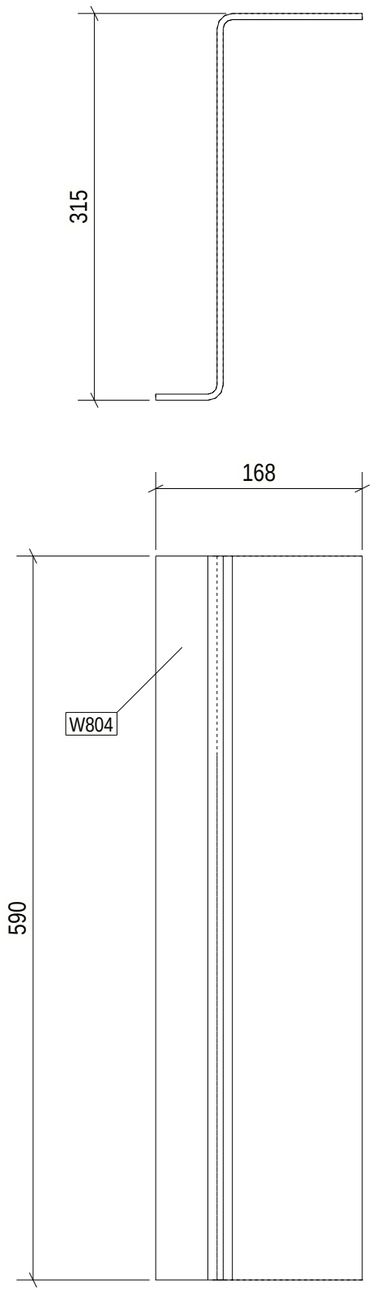

26 REQ'D AS DRAWN MK'D W804

GENERAL NOTES:

1. THE DIMENSIONS SHOWN ARE NOMINAL (IN MILLIMETERS), U.N.O.
2. WELD SIZESHALL BE AISC MINIMUM OF 6 mm UNLESS NOTED OTHERWISE.
3. ALL FIELD WELDS SHALL BE INSPECTED PER QUALITY ASSURANCE AND SPECIAL INSPECTIONS.

REFERENCE DRAWINGS

1	93M-BOA-NAT-LOT-04833
2	93M-BOA-NAT-LOT-09170
3	93M-BOA-NAT-LOT-01976
4	93M-BOA-NAT-LOT-20021
5	
6	
7	
8	
9	

6TH OF OCTOBER CITY RAIL TRANSIT MONORAIL

The Authority | Hill International Consultant | Main Contractor | Structural Designer

KEY PLAN:

6 October Monorail
Engineering Unit
Valid For Construction

SCALE	SHOPDRAWING	DATE
AS SHOWN		09/29/2023

REV.	DATE	DSG.	CHK.	APP.	AMENDMENTS	STATUS
B	08/29/2023	M.KH	M.KH	DR.M.M	ISSUED FOR INFORMATION	IFI
A	09/21/2022	M.KH	M.KH	DR.M.M	ISSUED FOR INFORMATION	IFI

DRAWING TITLE

6TH OF OCTOBER MONORAIL
SERVICE WALKWAYS
ZONE(1016)
W804

Project Code	Rubric	Initiator	Lot	Ref	Number	Revision
93M	0476	ACC	60DEP	DWG	1633	0 B

Tekla structures

Approval is subject to approval of coordination package between multi-discipline.

REVIEWED WITH COMMENT
MONORAILS PROJECT

Length & Area & Weight per piece						
W803	CHQD_PL5*540	S235JR	2	590.0	0.65	12.5
Mark	Profile	Grade	QTY	Length	Area	Weight

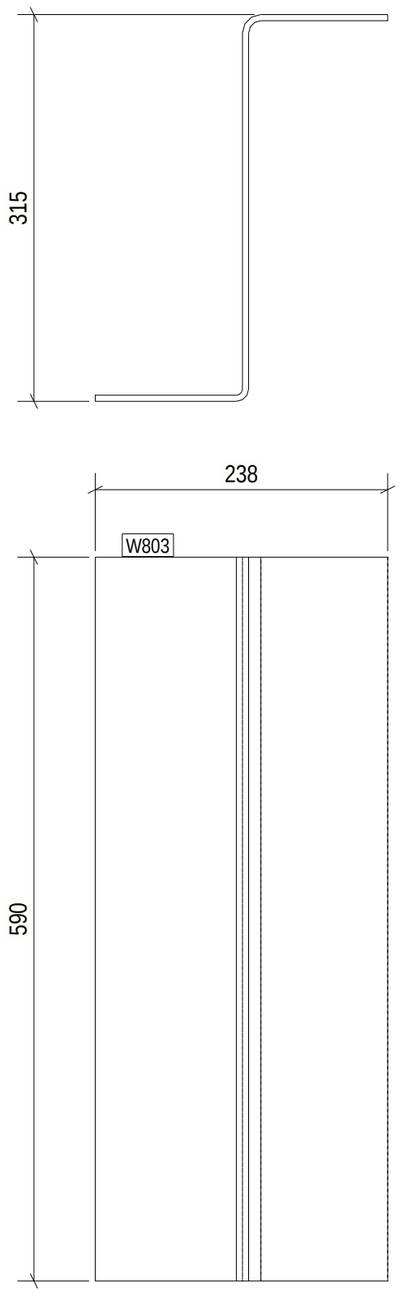

2 REQ'D AS DRAWN MK'D W803

GENERAL NOTES:

1. THE DIMENSIONS SHOWN ARE NOMINAL (IN MILLIMETERS), U.N.O.
2. WELD SIZESHALL BE AISC MINIMUM OF 6 mm UNLESS NOTED OTHERWISE.
3. ALL FIELD WELDS SHALL BE INSPECTED PER QUALITY ASSURANCE AND SPECIAL INSPECTIONS.

REFERENCE DRAWINGS

1	93M-BOA-NAT-LOT-04833
2	93M-BOA-NAT-LOT-09170
3	93M-BOA-NAT-LOT-01976
4	93M-BOA-NAT-LOT-20021
5	
6	
7	
8	
9	

6TH OF OCTOBER CITY RAIL TRANSIT MONORAIL

The Authority | Consultant: Hill International | Main Contractor: ORASCOM CONSTRUCTION, BOMBARDIER | Structural Designer: INNOVA TRANSPORTATION

KEY PLAN:

6 October Monorail
Engineering Unit
Valid For Construction

SCALE	SHOPDRAWING	DATE
AS SHOWN		09/29/2023

REV	DATE	DSG.	CHK.	APP.	AMENDMENTS	STATUS
B	08/29/2023	M.KH	M.KH	DR.M.M	ISSUED FOR INFORMATION	IFI
A	09/21/2022	M.KH	M.KH	DR.M.M	ISSUED FOR INFORMATION	IFI

DRAWING TITLE

6TH OF OCTOBER MONORAIL
SERVICE WALKWAYS
ZONE(1016)
W803

Project Code	Rubric	Initiator	Lot	Ref	Number	Revision
93M	0476	ACC60DEP	DWG	16331		B

Tekla structures

Approval is subject to approval of coordination package between multi-discipline.

REVIEWED WITH COMMENT
MONORAILS PROJECT

Length & Area & Weight per piece						
W801	UPN220	S235JR	2	751.4	0.54	22.1
Mark	Profile	Grade	QTY	Length	Area	Weight

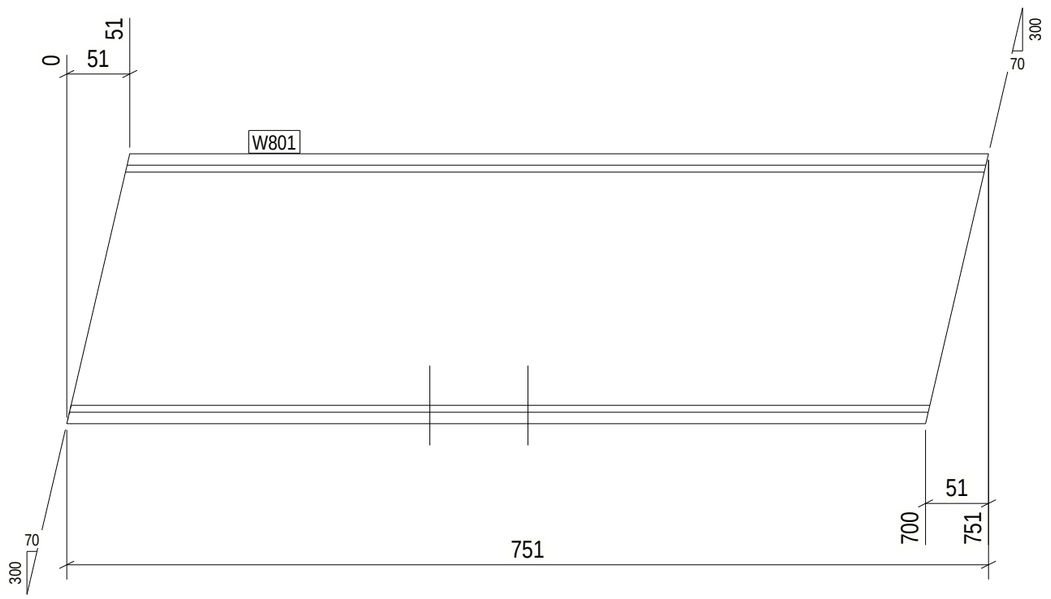

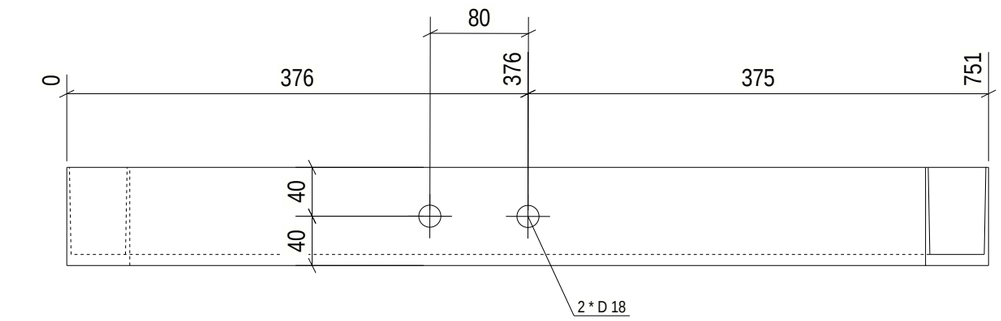

2 REQ'D AS DRAWN MK'D W801

6 October: Monorail
Engineering Unit
Valid For Construction

GENERAL NOTES:

1. THE DIMENSIONS SHOWN ARE NOMINAL (IN MILLIMETERS), U.N.O.
2. WELD SIZESHALL BE AISC MINIMUM OF 6 mm UNLESS NOTED OTHERWISE.
3. ALL FIELD WELDS SHALL BE INSPECTED PER QUALITY ASSURANCE AND SPECIAL INSPECTIONS.

REFERENCE DRAWINGS

1	93M-BOA-NAT-LOT-04833
2	93M-BOA-NAT-LOT-09170
3	93M-BOA-NAT-LOT-01976
4	93M-BOA-NAT-LOT-20021
5	
6	
7	
8	
9	

6TH OF OCTOBER CITY RAIL TRANSIT MONORAIL

The Authority | Hill International Consultant | ORASCOM BOMBARDIER Main Contractor | INNOVA Structural Designer

KEY PLAN:

SCALE: AS SHOWN | SHOPDRAWING | DATE: 09/29/2023

REV	DATE	DSG.	CHK.	APP.	AMENDMENTS	STATUS
B	08/29/2023	M.KH	M.KH	DR.M.M	ISSUED FOR INFORMATION	IFI
A	09/21/2022	M.KH	M.KH	DR.M.M	ISSUED FOR INFORMATION	IFI

DRAWING TITLE
6TH OF OCTOBER MONORAIL
SERVICE WALKWAYS
ZONE(1016)
W801

Project Code	Rubric	Initiator	Lot	Ref	Number	Revision
9 3 M	0 4 7 6	A C C	6 0 D E P	D W G	1 6 3 3 2	B

Tekla structures

Approval is subject to approval of coordination package between multi-discipline.

REVIEWED WITH COMMENT
MONORAILS PROJECT

Length & Area & Weight per piece						
W799	UPN220	S235JR	1	1973.9	1.42	58.0
Mark	Profile	Grade	QTY	Length	Area	Weight

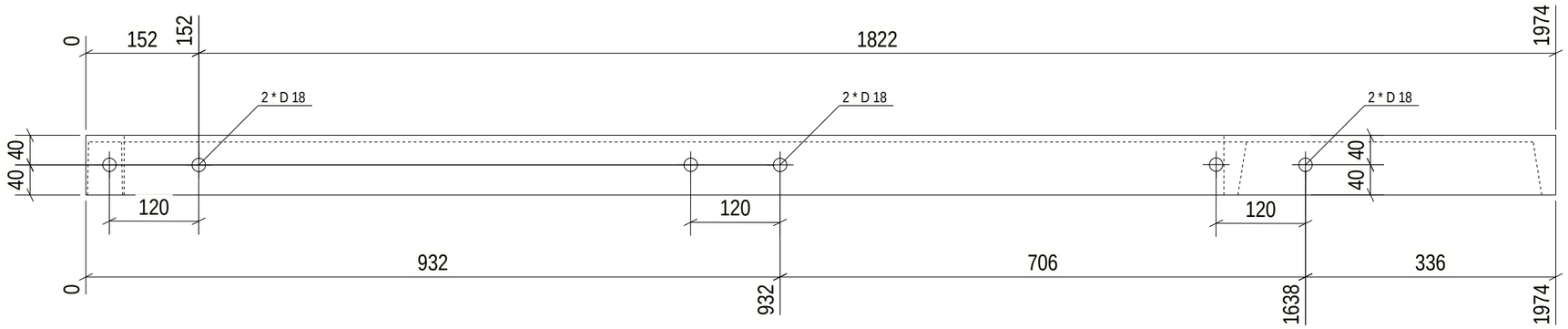

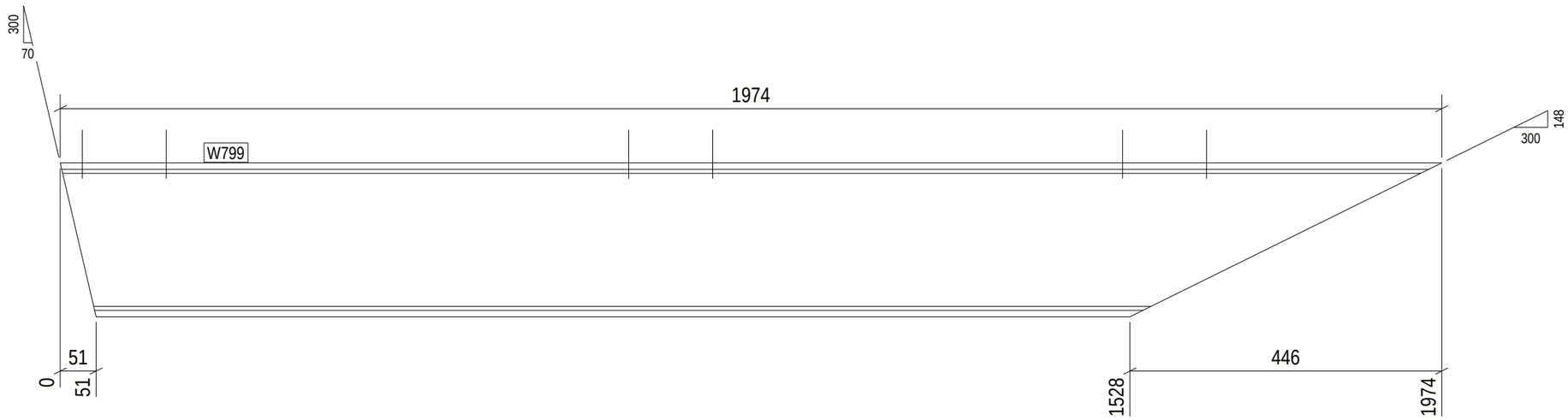

1 REQ'D AS DRAWN MK'D W799

6 October: Monorail
Engineering Unit
Valid For Construction

GENERAL NOTES:

1. THE DIMENSIONS SHOWN ARE NOMINAL (IN MILLIMETERS), U.N.O.
2. WELD SIZESHALL BE AISC MINIMUM OF 6 mm UNLESS NOTED OTHERWISE.
3. ALL FIELD WELDS SHALL BE INSPECTED PER QUALITY ASSURANCE AND SPECIAL INSPECTIONS.

REFERENCE DRAWINGS

1	93M-BOA-NAT-LOT-04833
2	93M-BOA-NAT-LOT-09170
3	93M-BOA-NAT-LOT-01976
4	93M-BOA-NAT-LOT-20021
5	
6	
7	
8	
9	

6TH OF OCTOBER CITY RAIL TRANSIT MONORAIL

The Authority — Hill International Consultant — Main Contractor — Structural Designer

KEY PLAN:

SCALE: AS SHOWN | SHOPDRAWING | DATE: 09/29/2023

REV	DATE	DSG.	CHK.	APP.	AMENDMENTS	STATUS
B	08/29/2023	M.KH	M.KH	DR.M.M	ISSUED FOR INFORMATION	IFI
A	09/21/2022	M.KH	M.KH	DR.M.M	ISSUED FOR INFORMATION	IFI

DRAWING TITLE

6TH OF OCTOBER MONORAIL
SERVICE WALKWAYS
ZONE(1016)
W799

Project Code	Rubric	Initiator	Lot	Ref	Number	Revision
93	M047	6	ACC60DE	P	DWG	1633	B

Tekla structures

Approval is subject to approval of coordination package between multi-discipline.

REVIEWED WITH COMMENT
MONORAILS PROJECT

Length & Area & Weight per piece						
W798	CHQD_PL5*192.1	S235JR	2	590.0	0.23	4.4
Mark	Profile	Grade	QTY	Length	Area	Weight

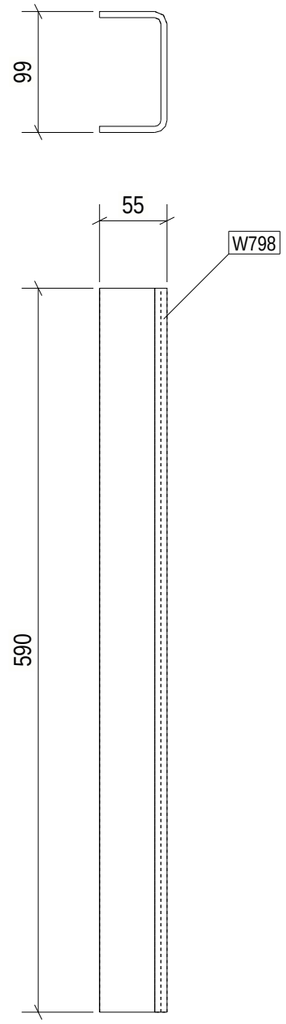

2 REQ'D AS DRAWN MK'D W798

6 October Monorail
Engineering Unit
Valid For Construction

GENERAL NOTES:

1. THE DIMENSIONS SHOWN ARE NOMINAL (IN MILLIMETERS), U.N.O.
2. WELD SIZESHALL BE AISC MINIMUM OF 6 mm UNLESS NOTED OTHERWISE.
3. ALL FIELD WELDS SHALL BE INSPECTED PER QUALITY ASSURANCE AND SPECIAL INSPECTIONS.

REFERENCE DRAWINGS

1	93M-BOA-NAT-LOT-04833
2	93M-BOA-NAT-LOT-09170
3	93M-BOA-NAT-LOT-01976
4	93M-BOA-NAT-LOT-20021
5	
6	
7	
8	
9	

6TH OF OCTOBER CITY RAIL TRANSIT MONORAIL

The Authority | Consultant: Hill International | Main Contractor: ORASCOM CONSTRUCTION, BOMBARDIER | Structural Designer: INNOVA FOUNDATION

KEY PLAN:

SCALE: AS SHOWN | SHOPDRAWING | DATE: 09/29/2023

REV	DATE	DSG.	CHK.	APP.	AMENDMENTS	STATUS
B	08/29/2023	M.KH	M.KH	DR.M.M	ISSUED FOR INFORMATION	IFI
A	09/21/2022	M.KH	M.KH	DR.M.M	ISSUED FOR INFORMATION	IFI

DRAWING TITLE

6TH OF OCTOBER MONORAIL
SERVICE WALKWAYS
ZONE(1016)
W798

Project Code	Rubric	Initiator	Lot	Ref	Number	Revision
93M	0476	ACC	60DEP	DWG	16334	B

Tekla structures

Approval is subject to approval of coordination package between multi-discipline.

REVIEWED WITH COMMENT
MONORAILS PROJECT

Length & Area & Weight per piece

Mark	Profile	Grade	QTY	Length	Area	Weight
W796	UPN140	S235JR	1	600.0	0.29	9.6

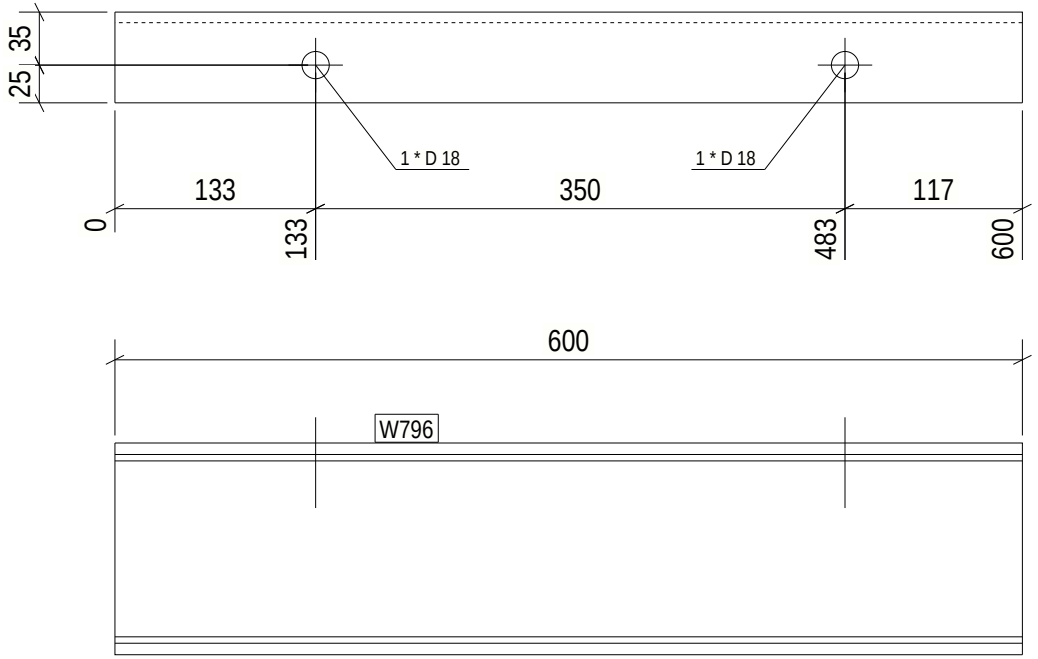

1 REQ'D AS DRAWN MK'D W796

6 October Monorail
Engineering Unit
Valid For Construction

Tekla structures

GENERAL NOTES:

1. THE DIMENSIONS SHOWN ARE NOMINAL (IN MILLIMETERS), U.N.O.
2. WELD SIZESHALL BE AISC MINIMUM OF 6 mm UNLESS NOTED OTHERWISE.
3. ALL FIELD WELDS SHALL BE INSPECTED PER QUALITY ASSURANCE AND SPECIAL INSPECTIONS.

REFERENCE DRAWINGS

1	93M-BOA-NAT-LOT-04833
2	93M-BOA-NAT-LOT-09170
3	93M-BOA-NAT-LOT-01976
4	93M-BOA-NAT-LOT-20021
5	
6	
7	
8	
9	

6TH OF OCTOBER CITY RAIL TRANSIT MONORAIL

The Authority | Hill International Consultant | Main Contractor | Structural Designer

KEY PLAN:

SCALE: AS SHOWN | SHOP DRAWING | DATE: 08/29/2023

DRAWING TITLE: 6TH OF OCTOBER MONORAIL SERVICE WALKWAYS ZONE(1016) W796

REV	DATE	DSG	CHK	APP	AMENDMENTS	STATUS
B	08/29/2023	MAH	MAH	DRAW	ISSUED FOR INFORMATION	IFI
A	08/11/2022	MAH	MAH	DRAW	ISSUED FOR INFORMATION	IFI

Project Code	Rubric	Initiator	Lot	Ref	Number	Revision
9 3 M	0 4 7 6	A C C	6 0 D E P	D W G	1 6 3 3 5	B

Approval is subject to approval of coordination package between multi-discipline.

REVIEWED WITH COMMENT
MONORAILS PROJECT

Length & Area & Weight per piece						
W795	L60*6	S235JR	4	1843.5	0.44	9.9
Mark	Profile	Grade	QTY	Length	Area	Weight

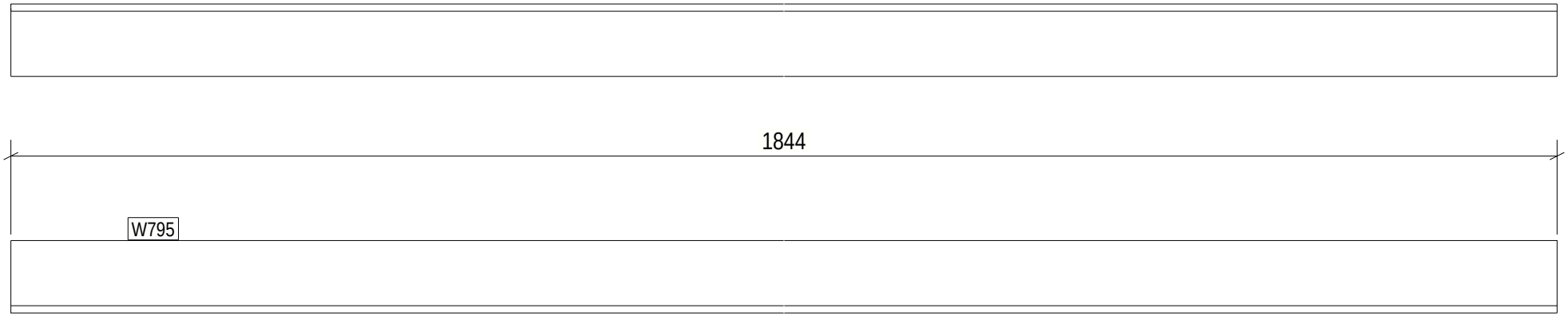

4 REQ'D AS DRAWN MK'D W795

6 October Monorail
Engineering Unit
Valid For Construction

Tekla structures

GENERAL NOTES:

1. THE DIMENSIONS SHOWN ARE NOMINAL (IN MILLIMETERS), U.N.O.
2. WELD SIZESHALL BE AISC MINIMUM OF 6 mm UNLESS NOTED OTHERWISE.
3. ALL FIELD WELDS SHALL BE INSPECTED PER QUALITY ASSURANCE AND SPECIAL INSPECTIONS.

REFERENCE DRAWINGS

1	93M-BOA-NAT-LOT-04833
2	93M-BOA-NAT-LOT-09170
3	93M-BOA-NAT-LOT-01976
4	93M-BOA-NAT-LOT-20021
5	
6	
7	
8	
9	

6TH OF OCTOBER CITY RAIL TRANSIT MONORAIL

The Authority — Hill International Consultant — Main Contractor — Structural Designer

KEY PLAN:

SCALE	SHOP DRAWING	DATE
AS SHOWN		08/29/2023

DRAWING TITLE
6TH OF OCTOBER MONORAIL
SERVICE WALKWAYS
ZONE(1016)
W795

REV	DATE	DSG	CHK	APP	AMENDMENTS	STATUS
B	08/29/2023	MAH	MAH	DRAW	ISSUED FOR INFORMATION	IFI
A	08/11/2022	MAH	MAH	DRAW	ISSUED FOR INFORMATION	IFI

Project Code	Rubric	Initiator	Lot	Ref	Number	Revision
9 3	M 0 4 7 6	A C C	6 0 D E P	D W G	1 6 3 3 6	B

Approval is subject to approval of coordination package between multi-discipline.

REVIEWED WITH COMMENT MONORAILS PROJECT

Length & Area & Weight per piece						
W794	L60*6	S235JR	4	1028.2	0.25	5.5
Mark	Profile	Grade	QTY	Length	Area	Weight

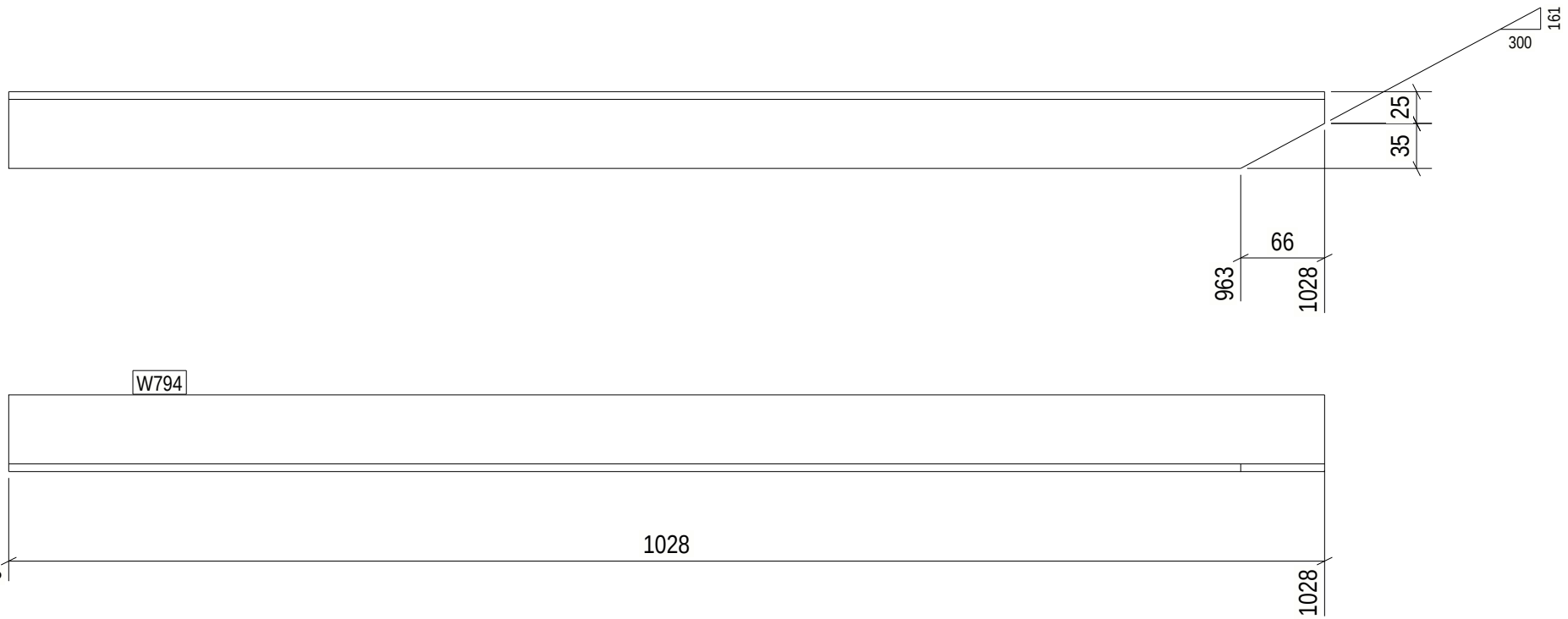

4 REQ'D AS DRAWN MK'D W794

6 October Monorail Engineering Unit Valid For Construction

GENERAL NOTES:

1. THE DIMENSIONS SHOWN ARE NOMINAL (IN MILLIMETERS), U.N.O.
2. WELD SIZESHALL BE AISC MINIMUM OF 6 mm UNLESS NOTED OTHERWISE.
3. ALL FIELD WELDS SHALL BE INSPECTED PER QUALITY ASSURANCE AND SPECIAL INSPECTIONS.

REFERENCE DRAWINGS

1	93M-BOA-NAT-LOT-04833
2	93M-BOA-NAT-LOT-09170
3	93M-BOA-NAT-LOT-01976
4	93M-BOA-NAT-LOT-20021
5	
6	
7	
8	
9	

6TH OF OCTOBER CITY RAIL TRANSIT MONORAIL

The Authority | Hill International Consultant | Main Contractor | Structural Designer

KEY PLAN:

SCALE: AS SHOWN | SHOP DRAWING | DATE: 08/29/2023

DRAWING TITLE: 6TH OF OCTOBER MONORAIL SERVICE WALKWAYS ZONE(1016) W794

REV	DATE	DSG	CHK	APP	AMENDMENTS	STATUS
B	08/29/2023	MAH	MAH	DRAW	ISSUED FOR INFORMATION	IFI
A	08/21/2022	MAH	MAH	DRAW	ISSUED FOR INFORMATION	IFI

Project Code	Rubric	Initiator	Lot	Ref	Number	Revision
9 3 M	0 4 7 6	A C C	6 0 D E P	D W G	1 6 3 3 7	B

Tekla structures

Approval is subject to approval of coordination package between multi-discipline.

REVIEWED WITH COMMENT
MONORAILS PROJECT

Length & Area & Weight per piece						
W793	L60*6	S235JR	4	903.1	0.22	4.8
Mark	Profile	Grade	QTY	Length	Area	Weight

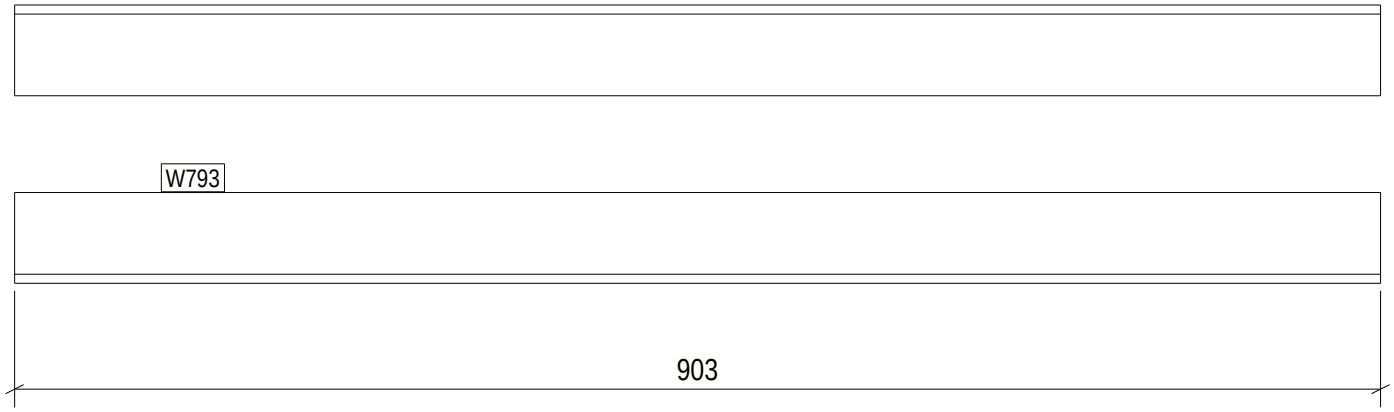

4 REQ'D AS DRAWN MK'D W793

6 October Monorail
Engineering Unit
Valid For Construction

Tekla structures

GENERAL NOTES:

1. THE DIMENSIONS SHOWN ARE NOMINAL (IN MILLIMETERS), U.N.O.
2. WELD SIZESHALL BE AISC MINIMUM OF 6 mm UNLESS NOTED OTHERWISE.
3. ALL FIELD WELDS SHALL BE INSPECTED PER QUALITY ASSURANCE AND SPECIAL INSPECTIONS.

REFERENCE DRAWINGS

1	93M-BOA-NAT-LOT-04833
2	93M-BOA-NAT-LOT-09170
3	93M-BOA-NAT-LOT-01976
4	93M-BOA-NAT-LOT-20021
5	
6	
7	
8	
9	

6TH OF OCTOBER CITY RAIL TRANSIT MONORAIL

The Authority — Hill International Consultant — Main Contractor — Structural Designer

KEY PLAN:

SCALE: AS SHOWN | SHOP DRAWING | DATE: 08/29/2023

DRAWING TITLE: 6TH OF OCTOBER MONORAIL SERVICE WALKWAYS ZONE(1016) W793

REV	DATE	DSG	CHK	APP	AMENDMENTS	STATUS
B	08/29/2023	MAH	MAH	DRAW	ISSUED FOR INFORMATION	IFI
A	08/11/2022	MAH	MAH	DRAW	ISSUED FOR INFORMATION	IFI

Project Code	Rubric	Initiator	Lot	Ref	Number	Revision
93M	0476	ACC	60DEP	DWG	1633	B

Approval is subject to approval of coordination package between multi-discipline.

REVIEWED WITH COMMENT
MONORAILS PROJECT

Length & Area & Weight per piece						
W792	L60*6	S235JR	4	1000.0	0.24	5.4
Mark	Profile	Grade	QTY	Length	Area	Weight

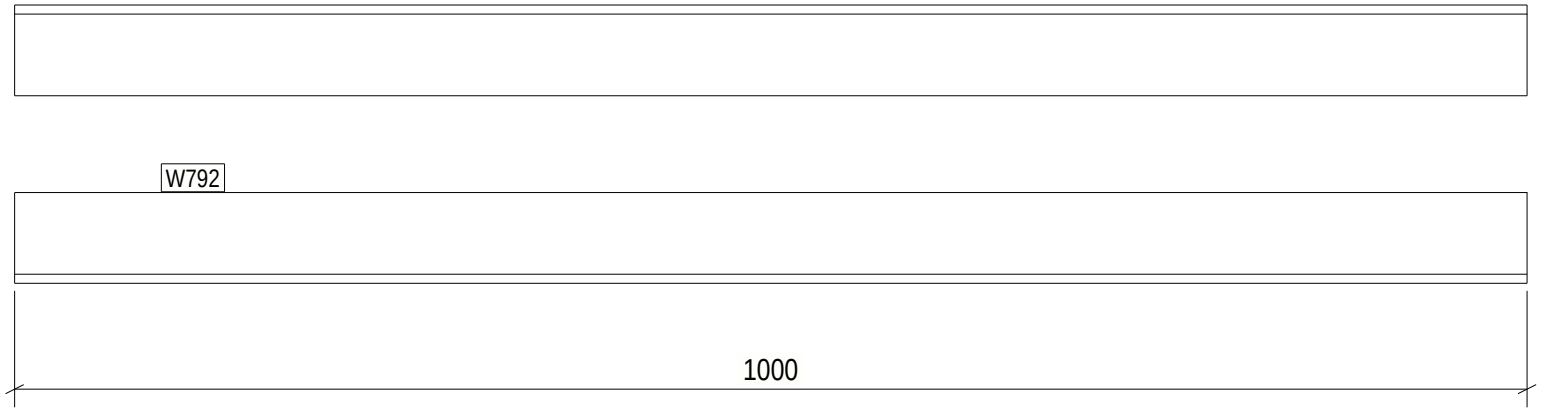

4 REQ'D AS DRAWN MK'D W792

6 October Monorail
Engineering Unit
Valid For Construction

Tekla structures

GENERAL NOTES:

1. THE DIMENSIONS SHOWN ARE NOMINAL (IN MILLIMETERS), U.N.O.
2. WELD SIZESHALL BE AISC MINIMUM OF 6 mm UNLESS NOTED OTHERWISE.
3. ALL FIELD WELDS SHALL BE INSPECTED PER QUALITY ASSURANCE AND SPECIAL INSPECTIONS.

REFERENCE DRAWINGS

1	93M-BOA-NAT-LOT-04833
2	93M-BOA-NAT-LOT-09170
3	93M-BOA-NAT-LOT-01976
4	93M-BOA-NAT-LOT-20021
5	
6	
7	
8	
9	

6TH OF OCTOBER CITY RAIL TRANSIT MONORAIL

The Authority — Hill International Consultant — Main Contractor — Structural Designer

KEY PLAN:

SCALE: AS SHOWN | SHOP DRAWING | DATE: 08/29/2023

DRAWING TITLE: 6TH OF OCTOBER MONORAIL SERVICE WALKWAYS ZONE(1016) W792

REV	DATE	DSG	CHK	APP	AMENDMENTS	STATUS
B	08/29/2023	MAH	MAH	DRAW	ISSUED FOR INFORMATION	IFI
A	08/11/2022	MAH	MAH	DRAW	ISSUED FOR INFORMATION	IFI

Project Code	Rubric	Initiator	Lot	Ref	Number	Revision
9 3 M	0 4 7 6	A C C	6 0 D E P	D W G	1 6 3 3 9	B

Approval is subject to approval of coordination package between multi-discipline.

REVIEWED WITH COMMENT
MONORAILS PROJECT

Length & Area & Weight per piece						
W791	UPN160	S235JR	4	2368.0	1.30	44.6
Mark	Profile	Grade	QTY	Length	Area	Weight

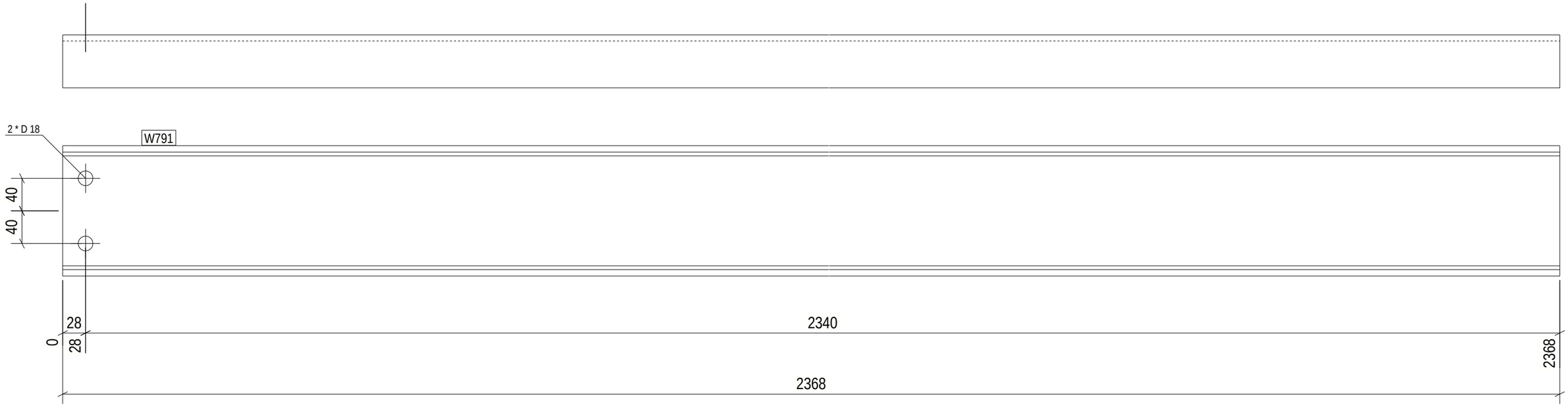

4 REQ'D AS DRAWN MK'D W791

6 October Monorail
Engineering Unit
Valid For Construction

GENERAL NOTES:

1. THE DIMENSIONS SHOWN ARE NOMINAL (IN MILLIMETERS), U.N.O.
2. WELD SIZESHALL BE AISC MINIMUM OF 6 mm UNLESS NOTED OTHERWISE.
3. ALL FIELD WELDS SHALL BE INSPECTED PER QUALITY ASSURANCE AND SPECIAL INSPECTIONS.

REFERENCE DRAWINGS

1	93M-BOA-NAT-LOT-04833
2	93M-BOA-NAT-LOT-09170
3	93M-BOA-NAT-LOT-01976
4	93M-BOA-NAT-LOT-20021
5	
6	
7	
8	
9	

6TH OF OCTOBER CITY RAIL TRANSIT MONORAIL

The Authority | Consultant: Hill International | Main Contractor: ORASCOM CONSTRUCTION, BOMBARDIER | Structural Designer: INNOVA TRANSPORTATION

KEY PLAN:

SCALE: AS SHOWN | SHOPDRAWING | DATE: 09/29/2023

REV	DATE	DSG.	CHK.	APP.	AMENDMENTS	STATUS
B	08/29/2023	M.KH	M.KH	DR.M.M	ISSUED FOR INFORMATION	IFI
A	09/21/2022	M.KH	M.KH	DR.M.M	ISSUED FOR INFORMATION	IFI

DRAWING TITLE

6TH OF OCTOBER MONORAIL
SERVICE WALKWAYS
ZONE(1016)
W791

Project Code	Rubric	Initiator	Lot	Ref	Number	Revision
93M	0476	ACC60DEP	DWG	16340		B

Tekla structures

Approval is subject to approval of coordination package between multi-discipline.

REVIEWED WITH COMMENT
MONORAILS PROJECT

Length & Area & Weight per piece						
W790	L70*7	S235JR	2	760.0	0.21	5.6
Mark	Profile	Grade	QTY	Length	Area	Weight

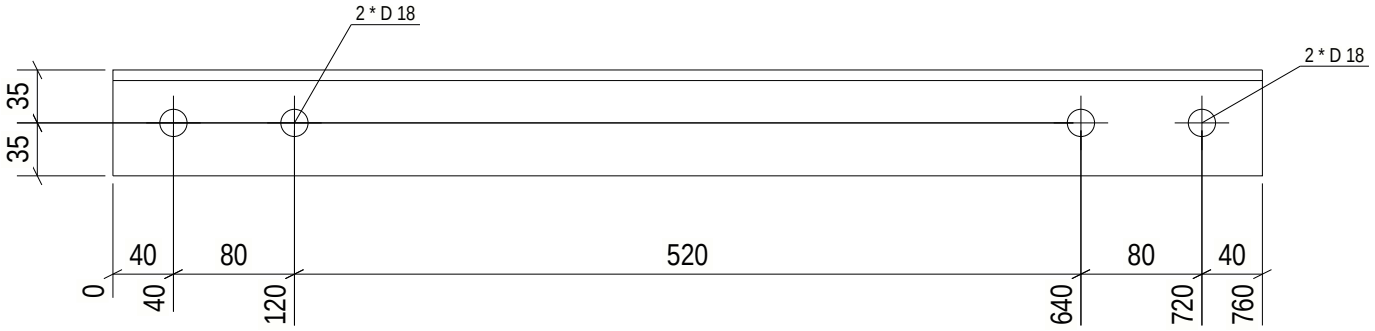

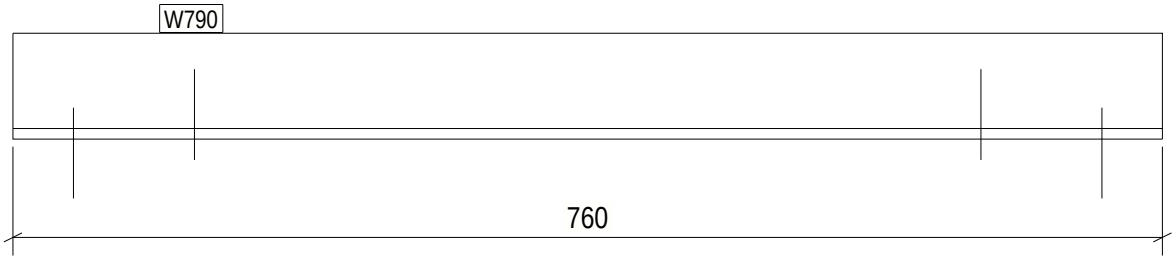

2 REQ'D AS DRAWN MK'D W790

6 October Monorail
Engineering Unit
Valid For Construction

GENERAL NOTES:

1. THE DIMENSIONS SHOWN ARE NOMINAL (IN MILLIMETERS), U.N.O.
2. WELD SIZESHALL BE AISC MINIMUM OF 6 mm UNLESS NOTED OTHERWISE.
3. ALL FIELD WELDS SHALL BE INSPECTED PER QUALITY ASSURANCE AND SPECIAL INSPECTIONS.

REFERENCE DRAWINGS

1	93M-BOA-NAT-LOT-04833
2	93M-BOA-NAT-LOT-09170
3	93M-BOA-NAT-LOT-01976
4	93M-BOA-NAT-LOT-20021
5	
6	
7	
8	
9	

6TH OF OCTOBER CITY RAIL TRANSIT MONORAIL

The Authority | Hill International Consultant | Main Contractor | Structural Designer

KEY PLAN:

SCALE: AS SHOWN | SHOP DRAWING | DATE: 08/29/2023

DRAWING TITLE: 6TH OF OCTOBER MONORAIL SERVICE WALKWAYS ZONE(1016) W790

REV	DATE	DSG	CHK	APP	AMENDMENTS	STATUS
B	08/29/2023	MAH	MAH	DRAW	ISSUED FOR INFORMATION	IFI
A	08/11/2022	MAH	MAH	DRAW	ISSUED FOR INFORMATION	IFI

Project Code	Rubric	Initiator	Lot	Ref	Number	Revision
9 3 M	0 4 7 6	A C C	6 0 D E P	D W G	1 6 3 4 1	B

Tekla structures

Approval is subject to approval of coordination package between multi-discipline.

REVIEWED WITH COMMENT
MONORAILS PROJECT

Length & Area & Weight per piece						
W789	L70*7	S235JR	2	985.6	0.28	7.2
Mark	Profile	Grade	QTY	Length	Area	Weight

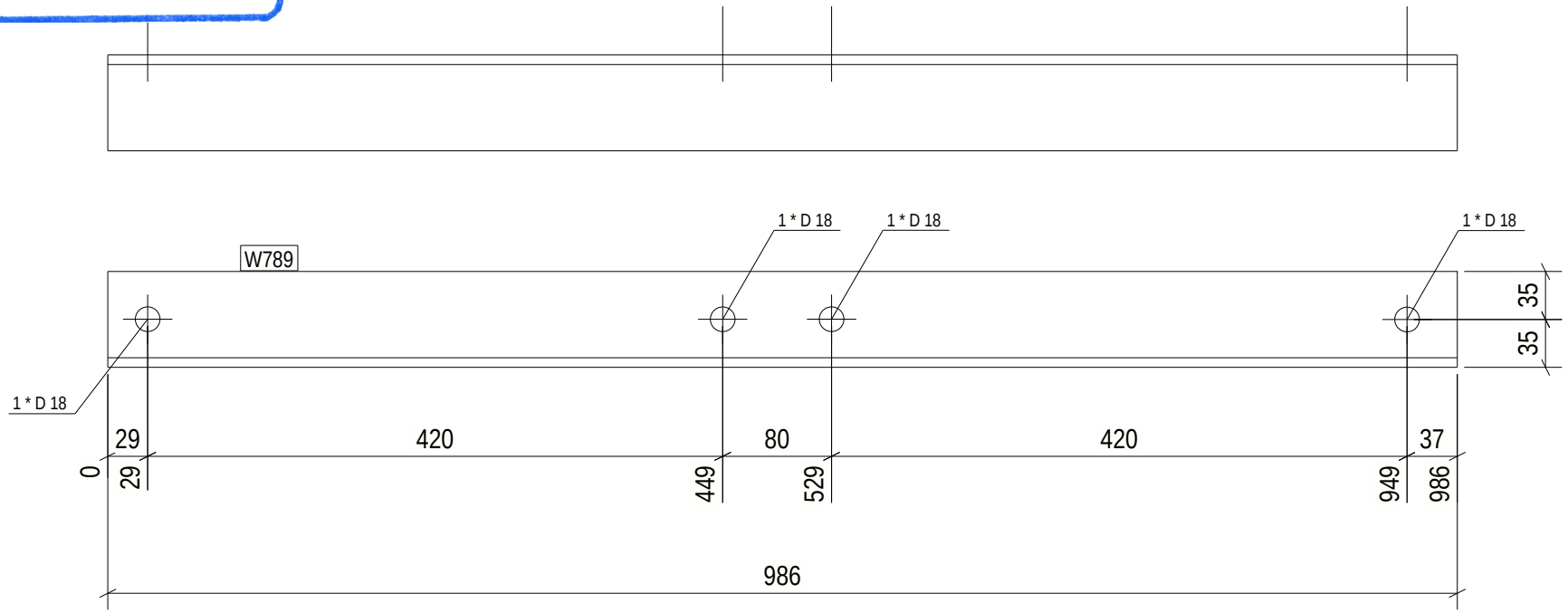

2 REQ'D AS DRAWN MK'D W789

6 October Monorail
Engineering Unit
Valid For Construction

GENERAL NOTES:

1. THE DIMENSIONS SHOWN ARE NOMINAL (IN MILLIMETERS), U.N.O.
2. WELD SIZESHALL BE AISC MINIMUM OF 6 mm UNLESS NOTED OTHERWISE.
3. ALL FIELD WELDS SHALL BE INSPECTED PER QUALITY ASSURANCE AND SPECIAL INSPECTIONS.

REFERENCE DRAWINGS

1	93M-BOA-NAT-LOT-04833
2	93M-BOA-NAT-LOT-09170
3	93M-BOA-NAT-LOT-01976
4	93M-BOA-NAT-LOT-20021
5	
6	
7	
8	
9	

6TH OF OCTOBER CITY RAIL TRANSIT MONORAIL

The Authority — Hill International Consultant — Main Contractor — Structural Designer

KEY PLAN:

SCALE	SHOP DRAWING	DATE
AS SHOWN		08/29/2023

DRAWING TITLE
6TH OF OCTOBER MONORAIL
SERVICE WALKWAYS
ZONE(1016)
W789

REV	DATE	DSG	CHK	APP	AMENDMENTS	STATUS
B	08/29/2023	MAH	MAH	DRAW	ISSUED FOR INFORMATION	IFI
A	08/11/2022	MAH	MAH	DRAW	ISSUED FOR INFORMATION	IFI

Project Code	Rubric	Initiator	Lot	Ref	Number	Revision
9 3 M	0 4 7 6	A C C	6 0 D E P	D W G	1 6 3 4 2	B

Tekla structures

Approval is subject to approval of coordination package between multi-discipline.

REVIEWED WITH COMMENT
MONORAILS PROJECT

Length & Area & Weight per piece

Mark	Profile	Grade	QTY	Length	Area	Weight
W788	L70*7	S235JR	1	986.0	0.28	7.2

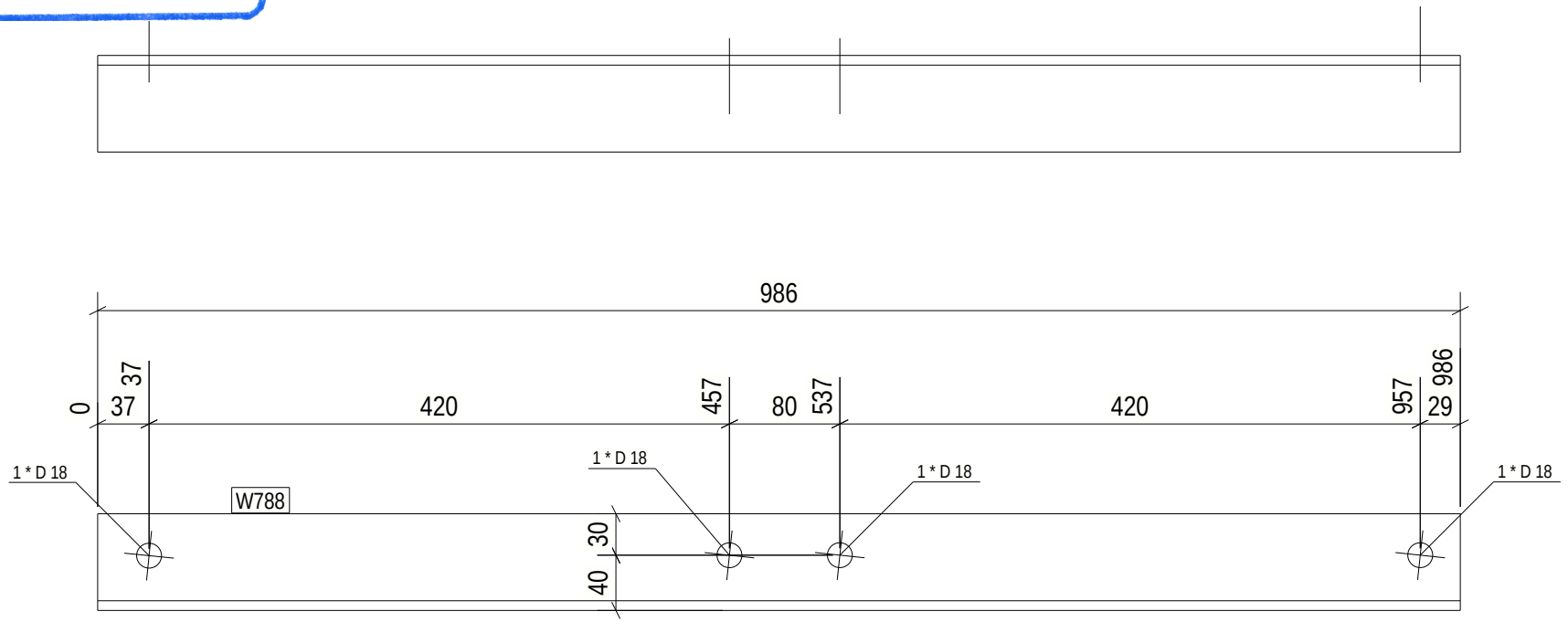

1 REQ'D AS DRAWN MK'D W788

6 October Monorail
Engineering Unit
Valid For Construction

GENERAL NOTES:

1. THE DIMENSIONS SHOWN ARE NOMINAL (IN MILLIMETERS), U.N.O.
2. WELD SIZESHALL BE AISC MINIMUM OF 6 mm UNLESS NOTED OTHERWISE.
3. ALL FIELD WELDS SHALL BE INSPECTED PER QUALITY ASSURANCE AND SPECIAL INSPECTIONS.

REFERENCE DRAWINGS

1	93M-BOA-NAT-LOT-04833
2	93M-BOA-NAT-LOT-09170
3	93M-BOA-NAT-LOT-01976
4	93M-BOA-NAT-LOT-20021
5	
6	
7	
8	
9	

6TH OF OCTOBER CITY RAIL TRANSIT MONORAIL

The Authority — Hill International Consultant — Main Contractor — Structural Designer

KEY PLAN:

SCALE: AS SHOWN | SHOP DRAWING | DATE: 08/29/2023

DRAWING TITLE: 6TH OF OCTOBER MONORAIL SERVICE WALKWAYS ZONE(1016) W788

REV	DATE	DSG	CHK	APP	AMENDMENTS	STATUS
B	08/29/2023	MAH	MAH	DRAW	ISSUED FOR INFORMATION	IFI
A	08/11/2022	MAH	MAH	DRAW	ISSUED FOR INFORMATION	IFI

Project Code	Rubric	Initiator	Lot	Ref	Number	Revision
9 3 M	0 4 7 6	A C C	6 0 D E P	D W G	1 6 3 4 3	B

Tekla structures

Approval is subject to approval of coordination package between multi-discipline.

REVIEWED WITH COMMENT
MONORAILS PROJECT

Length & Area & Weight per piece						
W756	ROD32	S235JR	25	100.0	0.01	0.6
Mark	Profile	Grade	QTY	Length	Area	Weight

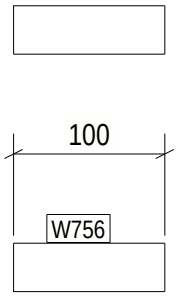

25 REQ'D AS DRAWN MK'D W756

6 October Monorail
Engineering Unit
Valid For Construction

GENERAL NOTES:

1. THE DIMENSIONS SHOWN ARE NOMINAL (IN MILLIMETERS), U.N.O.
2. WELD SIZESHALL BE AISC MINIMUM OF 6 mm UNLESS NOTED OTHERWISE.
3. ALL FIELD WELDS SHALL BE INSPECTED PER QUALITY ASSURANCE AND SPECIAL INSPECTIONS.

REFERENCE DRAWINGS

1	93M-BOA-NAT-LOT-04833
2	93M-BOA-NAT-LOT-09170
3	93M-BOA-NAT-LOT-01976
4	93M-BOA-NAT-LOT-20021
5	
6	
7	
8	
9	

6TH OF OCTOBER CITY RAIL TRANSIT MONORAIL

The Authority | Hill International Consultant | Main Contractor | Structural Designer

KEY PLAN:

SCALE: AS SHOWN | SHOP DRAWING | DATE: 08/29/2023

DRAWING TITLE: 6TH OF OCTOBER MONORAIL SERVICE WALKWAYS ZONE(1016) W756

REV	DATE	DSG	CHK	APP	AMENDMENTS	STATUS
B	08/29/2023	MAH	MAH	DRAW	ISSUED FOR INFORMATION	IFI
A	08/11/2022	MAH	MAH	DRAW	ISSUED FOR INFORMATION	IFI

Project Code	Rubric	Initiator	Lot	Ref	Number	Revision
9 3 M	0 4 7 6	A C C	6 0 D E P	D W G	1 6 3 4 4	B

Tekla structures

Approval is subject to approval of coordination package between multi-discipline.

REVIEWED WITH COMMENT
MONORAILS PROJECT

Length & Area & Weight per piece

Mark	Profile	Grade	QTY	Length	Area	Weight
W748	ROD32	S235JR	14	100.0	0.01	0.6

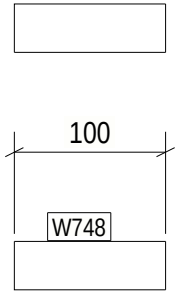

14 REQ'D AS DRAWN MK'D W748

6 October Monorail
Engineering Unit
Valid For Construction

GENERAL NOTES:

1. THE DIMENSIONS SHOWN ARE NOMINAL (IN MILLIMETERS), U.N.O.
2. WELD SIZESHALL BE AISC MINIMUM OF 6 mm UNLESS NOTED OTHERWISE.
3. ALL FIELD WELDS SHALL BE INSPECTED PER QUALITY ASSURANCE AND SPECIAL INSPECTIONS.

REFERENCE DRAWINGS

1	93M-BOA-NAT-LOT-04833
2	93M-BOA-NAT-LOT-09170
3	93M-BOA-NAT-LOT-01976
4	93M-BOA-NAT-LOT-20021
5	
6	
7	
8	
9	

6TH OF OCTOBER CITY RAIL TRANSIT MONORAIL

The Authority | Hill International Consultant | Main Contractor | Structural Designer

KEY PLAN:

SCALE: AS SHOWN | SHOP DRAWING | DATE: 08/29/2023

DRAWING TITLE: 6TH OF OCTOBER MONORAIL SERVICE WALKWAYS ZONE(1016) W748

REV	DATE	DSG	CHK	APP	AMENDMENTS	STATUS
B	08/29/2023	MAH	MAH	DRAW	ISSUED FOR INFORMATION	IFI
A	08/11/2022	MAH	MAH	DRAW	ISSUED FOR INFORMATION	IFI

Project Code	Rubric	Initiator	Lot	Ref	Number	Revision
9 3 M	0 4 7 6	A C C	6 0 D E P	D W G	1 6 3 4 5	B

Tekla structures

Approval is subject to approval of coordination package between multi-discipline.

REVIEWED WITH COMMENT
MONORAILS PROJECT

Length & Area & Weight per piece						
W460	PIPE2SCH40	S235JR	58	25.0	0.01	0.1
Mark	Profile	Grade	QTY	Length	Area	Weight

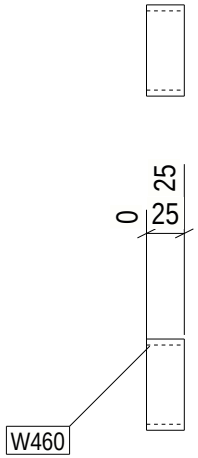

58 REQ'D AS DRAWN MK'D W460

6 October Monorail
Engineering Unit
Valid For Construction

Tekla structures

GENERAL NOTES:

1. THE DIMENSIONS SHOWN ARE NOMINAL (IN MILLIMETERS), U.N.O.
2. WELD SIZESHALL BE AISC MINIMUM OF 6 mm UNLESS NOTED OTHERWISE.
3. ALL FIELD WELDS SHALL BE INSPECTED PER QUALITY ASSURANCE AND SPECIAL INSPECTIONS.

REFERENCE DRAWINGS

1	93M-BOA-NAT-LOT-04833
2	93M-BOA-NAT-LOT-09170
3	93M-BOA-NAT-LOT-01976
4	93M-BOA-NAT-LOT-20021
5	
6	
7	
8	
9	

6TH OF OCTOBER CITY RAIL TRANSIT MONORAIL

The Authority — Hill International Consultant — Main Contractor — Structural Designer

KEY PLAN:

SCALE	SHOP DRAWING	DATE
AS SHOWN		08/29/2023

DRAWING TITLE
6TH OF OCTOBER MONORAIL
SERVICE WALKWAYS
ZONE(1016)
W460

REV	DATE	DSG	CHK	APP	AMENDMENTS	STATUS
B	08/29/2023	MAH	MAH	DRAW	ISSUED FOR INFORMATION	IFI
A	08/11/2022	MAH	MAH	DRAW	ISSUED FOR INFORMATION	IFI

Project Code	Rubric	Initiator	Lot	Ref	Number	Revision
9 3 M	0 4 7 6	A C C	6 0 D E P	D W G	1 6 3 4 6	B

Approval is subject to approval of coordination package between multi-discipline.

REVIEWED WITH COMMENT
MONORAILS PROJECT

Length & Area & Weight per piece						
W445	PL10*25	S355JR	58	98.0	0.01	0.2
Mark	Profile	Grade	QTY	Length	Area	Weight

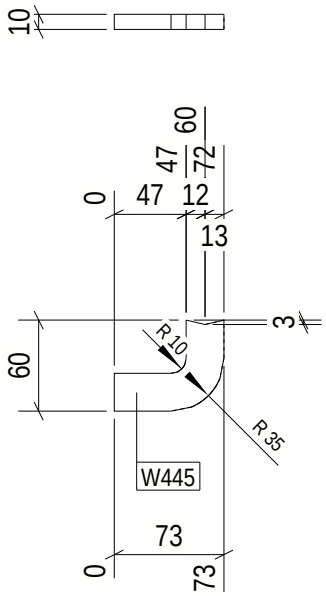

58 REQ'D AS DRAWN MK'D W445

6 October Monorail
Engineering Unit
Valid For Construction

GENERAL NOTES:

1. THE DIMENSIONS SHOWN ARE NOMINAL (IN MILLIMETERS), U.N.O.
2. WELD SIZESHALL BE AISC MINIMUM OF 6 mm UNLESS NOTED OTHERWISE.
3. ALL FIELD WELDS SHALL BE INSPECTED PER QUALITY ASSURANCE AND SPECIAL INSPECTIONS.

REFERENCE DRAWINGS

1	93M-BOA-NAT-LOT-04833
2	93M-BOA-NAT-LOT-09170
3	93M-BOA-NAT-LOT-01976
4	93M-BOA-NAT-LOT-20021
5	
6	
7	
8	
9	

6TH OF OCTOBER CITY RAIL TRANSIT MONORAIL

The Authority | Hill International Consultant | Main Contractor | Structural Designer

KEY PLAN:

SCALE: AS SHOWN | SHOP DRAWING | DATE: 08/29/2023

DRAWING TITLE: 6TH OF OCTOBER MONORAIL SERVICE WALKWAYS ZONE(1016) W445

REV	DATE	DSG	CHK	APP	AMENDMENTS	STATUS
B	08/29/2023	MAH	MAH	DRAW	ISSUED FOR INFORMATION	IFI
A	08/11/2022	MAH	MAH	DRAW	ISSUED FOR INFORMATION	IFI

Project Code	Rubric	Initiator	Lot	Ref	Number	Revision
9 3 M	0 4 7 6	A C C	6 0 D E P	D W G	1 6 3 4 7	B

Tekla structures

Approval is subject to approval of coordination package between multi-discipline.

REVIEWED WITH COMMENT
MONORAILS PROJECT

Length & Area & Weight per piece						
W271	PL16*100	S355JR	58	160.0	0.04	2.0
Mark	Profile	Grade	QTY	Length	Area	Weight

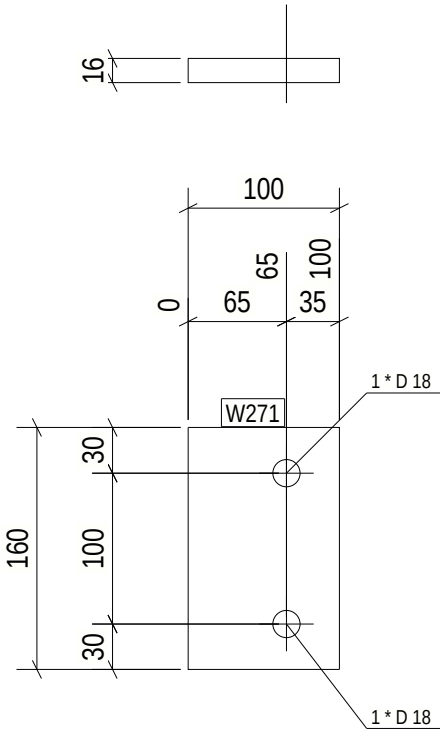

58 REQ'D AS DRAWN MK'D W271

6 October Monorail
Engineering Unit
Valid For Construction

GENERAL NOTES:

1. THE DIMENSIONS SHOWN ARE NOMINAL (IN MILLIMETERS), U.N.O.
2. WELD SIZESHALL BE AISC MINIMUM OF 6 mm UNLESS NOTED OTHERWISE.
3. ALL FIELD WELDS SHALL BE INSPECTED PER QUALITY ASSURANCE AND SPECIAL INSPECTIONS.

REFERENCE DRAWINGS

1	93M-BOA-NAT-LOT-04833
2	93M-BOA-NAT-LOT-09170
3	93M-BOA-NAT-LOT-01976
4	93M-BOA-NAT-LOT-20021
5	
6	
7	
8	
9	

6TH OF OCTOBER CITY RAIL TRANSIT MONORAIL

The Authority | Hill International Consultant | Main Contractor | Structural Designer

KEY PLAN:

SCALE: AS SHOWN | SHOP DRAWING | DATE: 08/29/2023

DRAWING TITLE: 6TH OF OCTOBER MONORAIL SERVICE WALKWAYS ZONE(1016) W271

REV	DATE	DSG	CHK	APP	AMENDMENTS	STATUS
B	08/29/2023	MAH	MAH	DRAW	ISSUED FOR INFORMATION	IFI
A	08/11/2022	MAH	MAH	DRAW	ISSUED FOR INFORMATION	IFI

Project Code	Rubric	Initiator	Lot	Ref	Number	Revision
9 3 M	0 4 7 6	A C C	6 0 D E P	D W G	1 6 3 4 8	B

Tekla structures

Approval is subject to approval of coordination package between multi-discipline.

REVIEWED WITH COMMENT
MONORAILS PROJECT

Length & Area & Weight per piece						
W193	PL10*157.2	S355JR	1	243.0	0.06	2.1
Mark	Profile	Grade	QTY	Length	Area	Weight

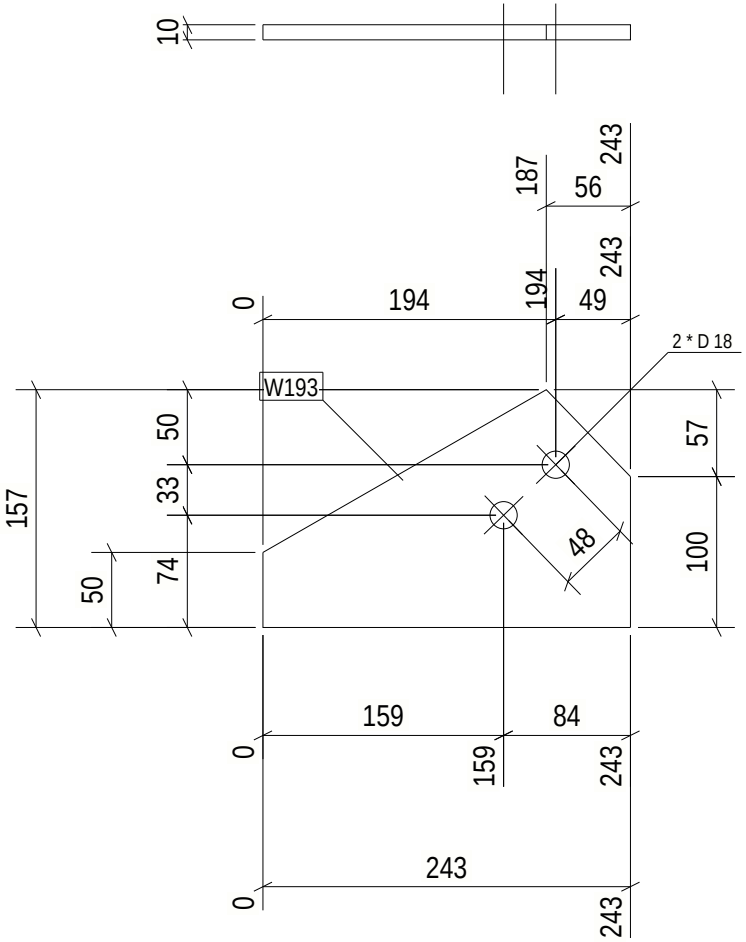

1 REQ'D AS DRAWN MK'D W193

6 October Monorail
Engineering Unit
Valid For Construction

GENERAL NOTES:

1. THE DIMENSIONS SHOWN ARE NOMINAL (IN MILLIMETERS), U.N.O.
2. WELD SIZESHALL BE AISC MINIMUM OF 6 mm UNLESS NOTED OTHERWISE.
3. ALL FIELD WELDS SHALL BE INSPECTED PER QUALITY ASSURANCE AND SPECIAL INSPECTIONS.

REFERENCE DRAWINGS

1	93M-BOA-NAT-LOT-04833
2	93M-BOA-NAT-LOT-09170
3	93M-BOA-NAT-LOT-01976
4	93M-BOA-NAT-LOT-20021
5	
6	
7	
8	
9	

6TH OF OCTOBER CITY RAIL TRANSIT MONORAIL

The Authority | Hill International Consultant | Main Contractor | Structural Designer

KEY PLAN:

SCALE: AS SHOWN | SHOP DRAWING | DATE: 08/29/2023

DRAWING TITLE: 6TH OF OCTOBER MONORAIL SERVICE WALKWAYS ZONE(1016) W193

REV	DATE	DSG	CHK	APP	AMENDMENTS	STATUS
B	08/29/2023	MAH	MAH	DRAW	ISSUED FOR INFORMATION	IFI
A	08/11/2022	MAH	MAH	DRAW	ISSUED FOR INFORMATION	IFI

Project Code	Rubric	Initiator	Lot	Ref	Number	Revision
93M	0476	ACC60	DEP	DWG	16349	B

Tekla structures

Approval is subject to approval of coordination package between multi-discipline.

REVIEWED WITH COMMENT
MONORAILS PROJECT

Length & Area & Weight per piece						
W192	PL10*157.1	S355JR	1	246.0	0.06	2.1
Mark	Profile	Grade	QTY	Length	Area	Weight

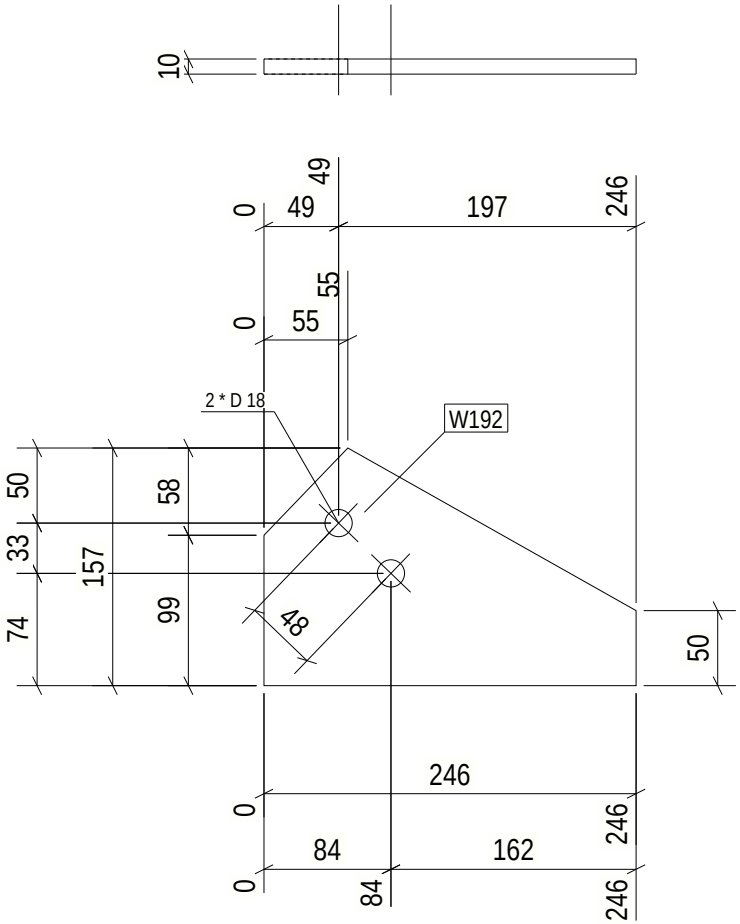

1 REQ'D AS DRAWN MK'D W192

6 October Monorail
Engineering Unit
Valid For Construction

GENERAL NOTES:

1. THE DIMENSIONS SHOWN ARE NOMINAL (IN MILLIMETERS), U.N.O.
2. WELD SIZESHALL BE AISC MINIMUM OF 6 mm UNLESS NOTED OTHERWISE.
3. ALL FIELD WELDS SHALL BE INSPECTED PER QUALITY ASSURANCE AND SPECIAL INSPECTIONS.

REFERENCE DRAWINGS

1	93M-BOA-NAT-LOT-04833
2	93M-BOA-NAT-LOT-09170
3	93M-BOA-NAT-LOT-01976
4	93M-BOA-NAT-LOT-20021
5	
6	
7	
8	
9	

6TH OF OCTOBER CITY RAIL TRANSIT MONORAIL

The Authority | Hill International Consultant | Main Contractor | Structural Designer

KEY PLAN:

SCALE	SHOP DRAWING	DATE
AS SHOWN		08/29/2023

DRAWING TITLE
6TH OF OCTOBER MONORAIL
SERVICE WALKWAYS
ZONE(1016)
W192

REV	DATE	DSG	CHK	APP	AMENDMENTS	STATUS
B	08/29/2023	MAH	MAH	DRAW	ISSUED FOR INFORMATION	IFI
A	08/11/2022	MAH	MAH	DRAW	ISSUED FOR INFORMATION	IFI

Project Code	Rubric	Initiator	Lot	Ref	Number	Revision
9 3 M	0 4 7 6	A C C	6 0 D E P	D W G	1 6 3 5 0	B

Tekla structures

Approval is subject to approval of coordination package between multi-discipline.

REVIEWED WITH COMMENT
MONORAILS PROJECT

Length & Area & Weight per piece						
W191	PL10*159.4	S355JR	1	193.6	0.05	1.7
Mark	Profile	Grade	QTY	Length	Area	Weight

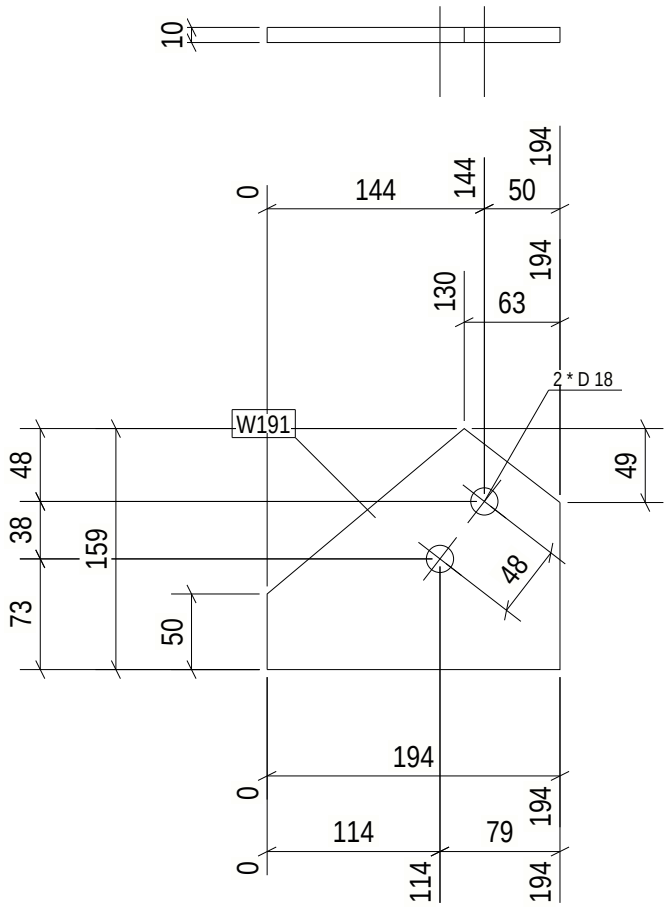

1 REQ'D AS DRAWN MK'D W191

6 October Monorail
Engineering Unit
Valid For Construction

GENERAL NOTES:

1. THE DIMENSIONS SHOWN ARE NOMINAL (IN MILLIMETERS), U.N.O.
2. WELD SIZESHALL BE AISC MINIMUM OF 6 mm UNLESS NOTED OTHERWISE.
3. ALL FIELD WELDS SHALL BE INSPECTED PER QUALITY ASSURANCE AND SPECIAL INSPECTIONS.

REFERENCE DRAWINGS

1	93M-BOA-NAT-LOT-04833
2	93M-BOA-NAT-LOT-09170
3	93M-BOA-NAT-LOT-01976
4	93M-BOA-NAT-LOT-20021
5	
6	
7	
8	
9	

6TH OF OCTOBER CITY RAIL TRANSIT MONORAIL

The Authority | Hill International Consultant | Main Contractor | Structural Designer

KEY PLAN:

SCALE: AS SHOWN | SHOP DRAWING | DATE: 08/29/2023

DRAWING TITLE: 6TH OF OCTOBER MONORAIL SERVICE WALKWAYS ZONE(1016) W191

REV	DATE	DSG	CHK	APP	AMENDMENTS	STATUS
B	08/29/2023	MAH	MAH	DRAW	ISSUED FOR INFORMATION	IFI
A	08/11/2022	MAH	MAH	DRAW	ISSUED FOR INFORMATION	IFI

Project Code	Rubric	Initiator	Lot	Ref	Number	Revision
9 3 M	0 4 7 6	A C C	6 0 D E P	D W G	1 6 3 5 1	B

Tekla structures

Approval is subject to approval of coordination package between multi-discipline.

REVIEWED WITH COMMENT MONORAILS PROJECT

Length & Area & Weight per piece						
W190	PL10*159.6	S355JR	1	199.0	0.05	1.8
Mark	Profile	Grade	QTY	Length	Area	Weight

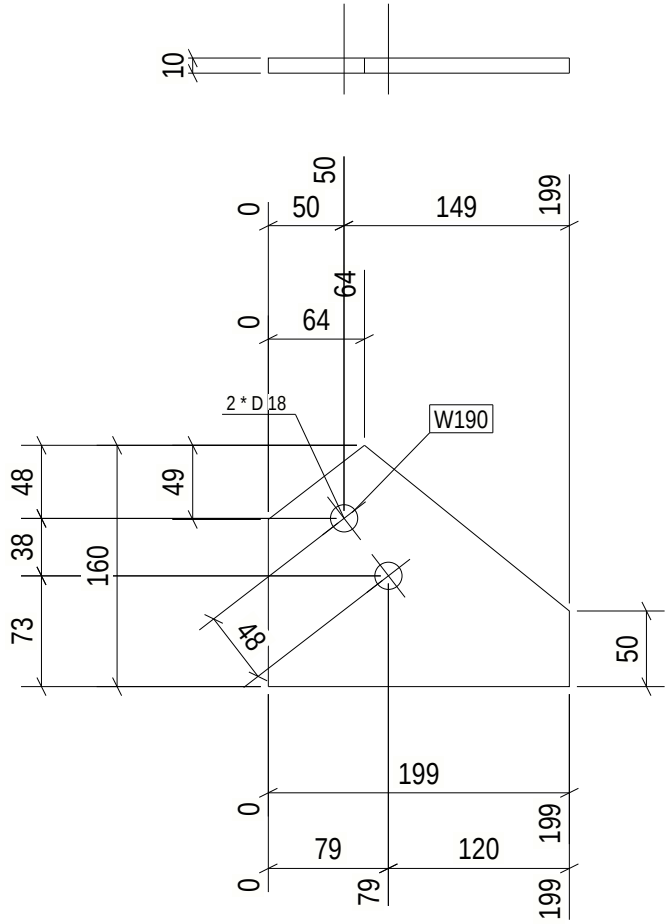

1 REQ'D AS DRAWN MK'D W190

6 October Monorail Engineering Unit
Valid For Construction

GENERAL NOTES:

1. THE DIMENSIONS SHOWN ARE NOMINAL (IN MILLIMETERS), U.N.O.
2. WELD SIZESHALL BE AISC MINIMUM OF 6 mm UNLESS NOTED OTHERWISE.
3. ALL FIELD WELDS SHALL BE INSPECTED PER QUALITY ASSURANCE AND SPECIAL INSPECTIONS.

REFERENCE DRAWINGS

1	93M-BOA-NAT-LOT-04833
2	93M-BOA-NAT-LOT-09170
3	93M-BOA-NAT-LOT-01976
4	93M-BOA-NAT-LOT-20021
5	
6	
7	
8	
9	

6TH OF OCTOBER CITY RAIL TRANSIT MONORAIL

The Authority | Hill International Consultant | Main Contractor | Structural Designer

KEY PLAN:

SCALE	SHOP DRAWING	DATE
AS SHOWN		08/29/2023

REV	DATE	DSG.	CHK.	APP.	AMENDMENTS	STATUS
B	08/29/2023	MKH	MKH	DR.MW	ISSUED FOR INFORMATION	IFI
A	08/21/2022	MKH	MKH	DR.MW	ISSUED FOR INFORMATION	IFI

DRAWING TITLE

6TH OF OCTOBER MONORAIL SERVICE WALKWAYS ZONE(1016)
W190

Project Code	Rubric	Initiator	Lot	Ref	Number	Revision
93M	0476	ACC	60DEP	DWG	16352	B

Tekla structures

Approval is subject to approval of coordination package between multi-discipline.

REVIEWED WITH COMMENT
MONORAILS PROJECT

Length & Area & Weight per piece						
W189	PL10*159.6	S355JR	1	170.2	0.05	1.6
Mark	Profile	Grade	QTY	Length	Area	Weight

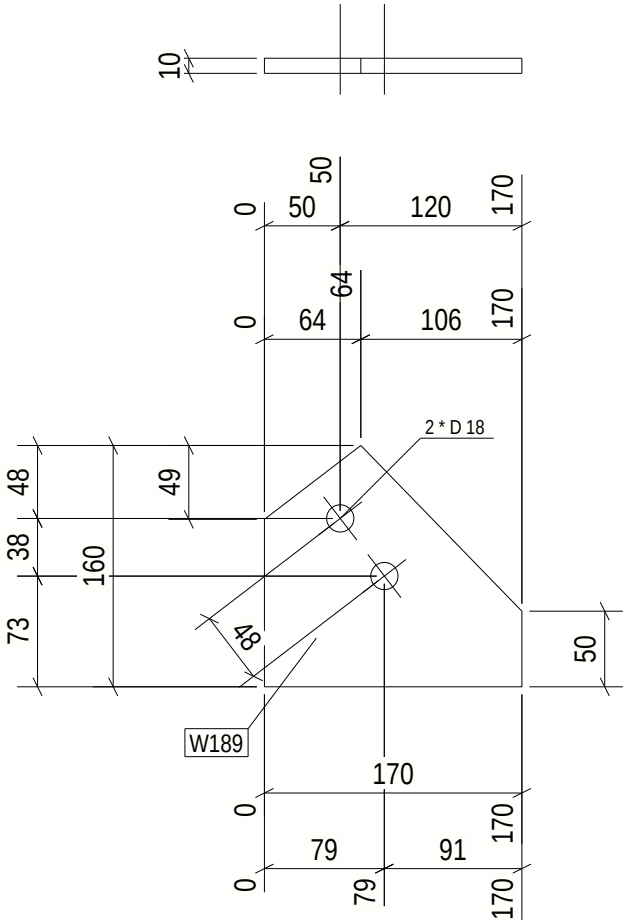

1 REQ'D AS DRAWN MK'D W189

6 October Monorail
Engineering Unit
Valid For Construction

GENERAL NOTES:

1. THE DIMENSIONS SHOWN ARE NOMINAL (IN MILLIMETERS), U.N.O.
2. WELD SIZESHALL BE AISC MINIMUM OF 6 mm UNLESS NOTED OTHERWISE.
3. ALL FIELD WELDS SHALL BE INSPECTED PER QUALITY ASSURANCE AND SPECIAL INSPECTIONS.

REFERENCE DRAWINGS

1	93M-BOA-NAT-LOT-04833
2	93M-BOA-NAT-LOT-09170
3	93M-BOA-NAT-LOT-01976
4	93M-BOA-NAT-LOT-20021
5	
6	
7	
8	
9	

6TH OF OCTOBER CITY RAIL TRANSIT MONORAIL

The Authority | Hill International Consultant | Main Contractor | Structural Designer

KEY PLAN:

SCALE: AS SHOWN | SHOP DRAWING | DATE: 08/29/2023

DRAWING TITLE: 6TH OF OCTOBER MONORAIL SERVICE WALKWAYS ZONE(1016) W189

REV	DATE	DSG	CHK	APP	AMENDMENTS	STATUS
B	08/29/2023	MAH	MAH	DRAW	ISSUED FOR INFORMATION	IFI
A	08/21/2022	MAH	MAH	DRAW	ISSUED FOR INFORMATION	IFI

Project Code	Rubric	Initiator	Lot	Ref	Number	Revision
9 3 M	0 4 7 6	A C C	6 0 D E P	D W G	1 6 3 5 3	B

Tekla structures

Approval is subject to approval of coordination package between multi-discipline.

REVIEWED WITH COMMENT
MONORAILS PROJECT

Length & Area & Weight per piece						
W188	PL10*140.1	S355JR	1	159.5	0.04	1.3
Mark	Profile	Grade	QTY	Length	Area	Weight

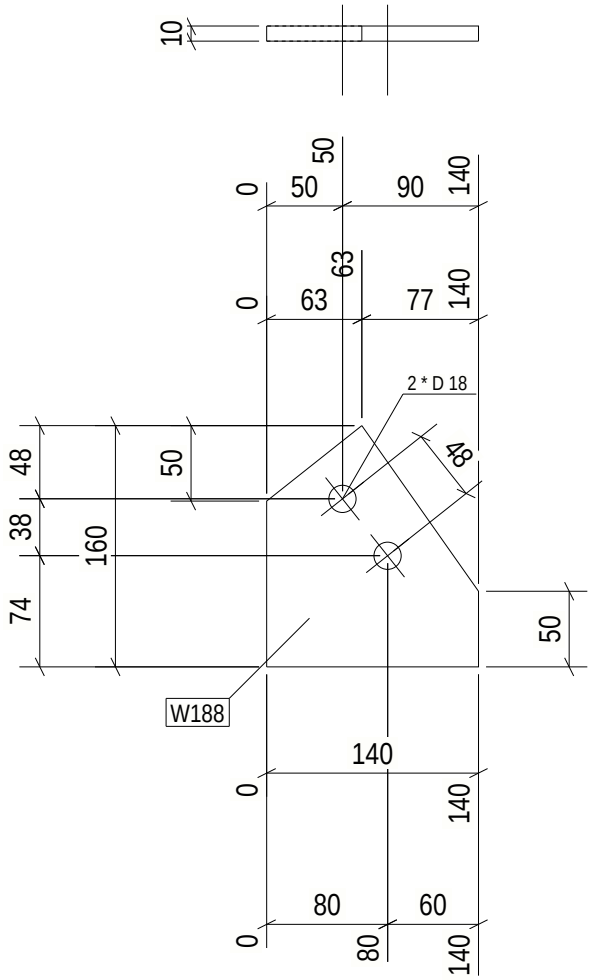

1 REQ'D AS DRAWN MK'D W188

6 October Monorail
Engineering Unit
Valid For Construction

GENERAL NOTES:

1. THE DIMENSIONS SHOWN ARE NOMINAL (IN MILLIMETERS), U.N.O.
2. WELD SIZESHALL BE AISC MINIMUM OF 6 mm UNLESS NOTED OTHERWISE.
3. ALL FIELD WELDS SHALL BE INSPECTED PER QUALITY ASSURANCE AND SPECIAL INSPECTIONS.

REFERENCE DRAWINGS

1	93M-BOA-NAT-LOT-04833
2	93M-BOA-NAT-LOT-09170
3	93M-BOA-NAT-LOT-01976
4	93M-BOA-NAT-LOT-20021
5	
6	
7	
8	
9	

6TH OF OCTOBER CITY RAIL TRANSIT MONORAIL

The Authority | Hill International Consultant | Main Contractor | Structural Designer

KEY PLAN:

SCALE	SHOP DRAWING	DATE
AS SHOWN		08/29/2023

DRAWING TITLE
6TH OF OCTOBER MONORAIL
SERVICE WALKWAYS
ZONE(1016)
W188

REV	DATE	DSG	CHK	APP	AMENDMENTS	STATUS
B	08/29/2023	MAH	MAH	DRAW	ISSUED FOR INFORMATION	IFI
A	08/11/2022	MAH	MAH	DRAW	ISSUED FOR INFORMATION	IFI

Project Code	Rubric	Initiator	Lot	Ref	Number	Revision
93M	0476	ACC60	DEP	DWG	16354	B

Tekla structures

Approval is subject to approval of coordination package between multi-discipline.

REVIEWED WITH COMMENT
MONORAILS PROJECT

Length & Area & Weight per piece						
W187	PL10*157.5	S355JR	2	178.5	0.05	1.6
Mark	Profile	Grade	QTY	Length	Area	Weight

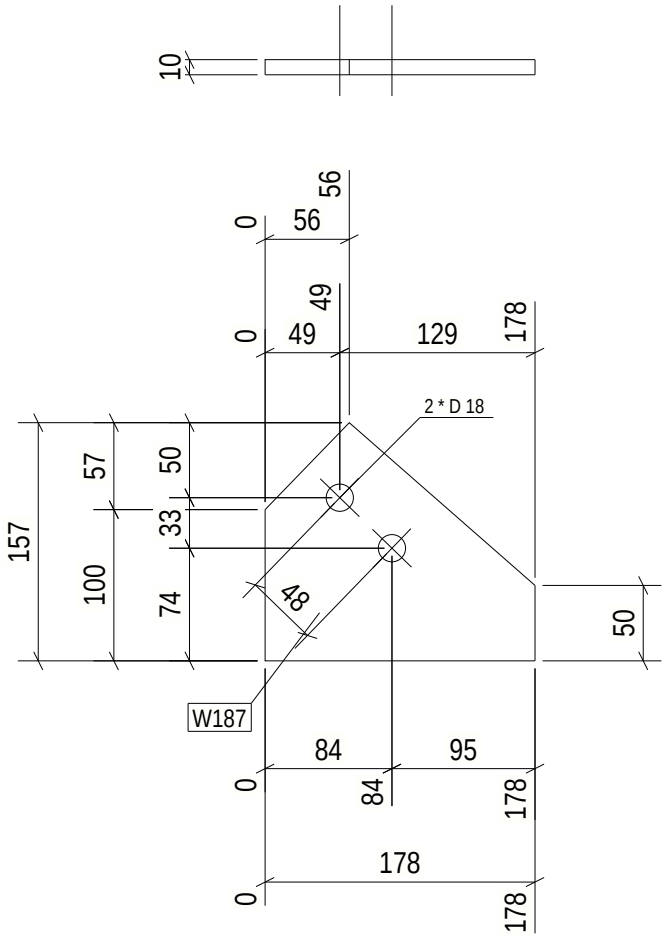

2 REQ'D AS DRAWN MK'D W187

6 October Monorail
Engineering Unit
Valid For Construction

GENERAL NOTES:

1. THE DIMENSIONS SHOWN ARE NOMINAL (IN MILLIMETERS), U.N.O.
2. WELD SIZESHALL BE AISC MINIMUM OF 6 mm UNLESS NOTED OTHERWISE.
3. ALL FIELD WELDS SHALL BE INSPECTED PER QUALITY ASSURANCE AND SPECIAL INSPECTIONS.

REFERENCE DRAWINGS

1	93M-BOA-NAT-LOT-04833
2	93M-BOA-NAT-LOT-09170
3	93M-BOA-NAT-LOT-01976
4	93M-BOA-NAT-LOT-20021
5	
6	
7	
8	
9	

6TH OF OCTOBER CITY RAIL TRANSIT MONORAIL

The Authority | Hill International Consultant | Main Contractor | Structural Designer

KEY PLAN:

SCALE: AS SHOWN | SHOP DRAWING | DATE: 08/29/2023

DRAWING TITLE: 6TH OF OCTOBER MONORAIL SERVICE WALKWAYS ZONE(1016) W187

REV	DATE	DSG	CHK	APP	AMENDMENTS	STATUS
B	08/29/2023	MAH	MAH	DRAW	ISSUED FOR INFORMATION	IFI
A	08/11/2022	MAH	MAH	DRAW	ISSUED FOR INFORMATION	IFI

Project Code	Rubric	Initiator	Lot	Ref	Number	Revision
9 3 M	0 4 7 6	A C C	6 0 D E P	D W G	1 6 3 5 5	B

Tekla structures

Approval is subject to approval of coordination package between multi-discipline.

REVIEWED WITH COMMENT
MONORAILS PROJECT

Length & Area & Weight per piece						
W180	PL10*156.5	S355JR	1	159.5	0.04	1.4
Mark	Profile	Grade	QTY	Length	Area	Weight

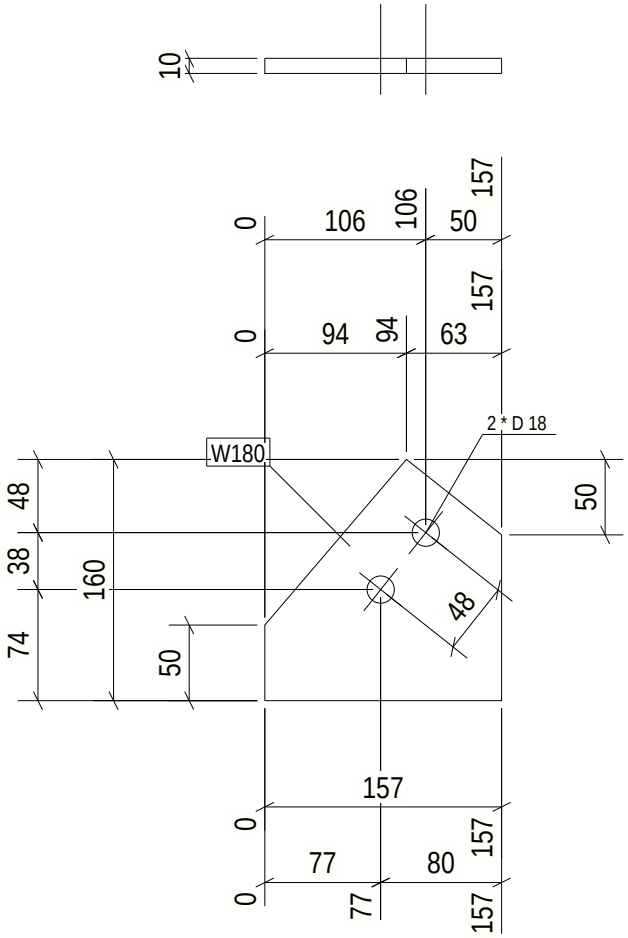

1 REQ'D AS DRAWN MK'D W180

6 October Monorail
Engineering Unit
Valid For Construction

GENERAL NOTES:

1. THE DIMENSIONS SHOWN ARE NOMINAL (IN MILLIMETERS), U.N.O.
2. WELD SIZESHALL BE AISC MINIMUM OF 6 mm UNLESS NOTED OTHERWISE.
3. ALL FIELD WELDS SHALL BE INSPECTED PER QUALITY ASSURANCE AND SPECIAL INSPECTIONS.

REFERENCE DRAWINGS

1	93M-BOA-NAT-LOT-04833
2	93M-BOA-NAT-LOT-09170
3	93M-BOA-NAT-LOT-01976
4	93M-BOA-NAT-LOT-20021
5	
6	
7	
8	
9	

6TH OF OCTOBER CITY RAIL TRANSIT MONORAIL

The Authority | Hill International Consultant | Main Contractor | Structural Designer

KEY PLAN:

SCALE: AS SHOWN | SHOP DRAWING | DATE: 08/29/2023

DRAWING TITLE: 6TH OF OCTOBER MONORAIL SERVICE WALKWAYS ZONE(1016) W180

REV	DATE	DSG	CHK	APP	AMENDMENTS	STATUS
B	08/29/2023	MAH	MAH	DRAW	ISSUED FOR INFORMATION	IFI
A	08/11/2022	MAH	MAH	DRAW	ISSUED FOR INFORMATION	IFI

Project Code	Rubric	Initiator	Lot	Ref	Number	Revision
9 3 M	0 4 7 6	A C C	6 0 D E P	D W G	1 6 3 5 6	B

Tekla structures

Approval is subject to approval of coordination package between multi-discipline.

REVIEWED WITH COMMENT
MONORAILS PROJECT

Length & Area & Weight per piece						
W177	PL8*155.4	S355JR	40	292.1	0.07	2.1
Mark	Profile	Grade	QTY	Length	Area	Weight

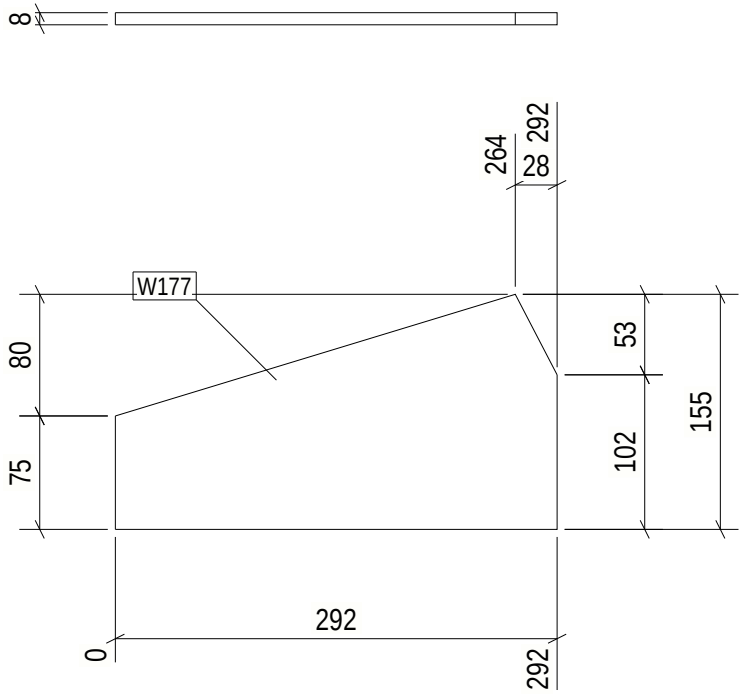

40 REQ'D AS DRAWN MK'D W177

6 October Monorail
Engineering Unit
Valid For Construction

GENERAL NOTES:

1. THE DIMENSIONS SHOWN ARE NOMINAL (IN MILLIMETERS), U.N.O.
2. WELD SIZESHALL BE AISC MINIMUM OF 6 mm UNLESS NOTED OTHERWISE.
3. ALL FIELD WELDS SHALL BE INSPECTED PER QUALITY ASSURANCE AND SPECIAL INSPECTIONS.

REFERENCE DRAWINGS

1	93M-BOA-NAT-LOT-04833
2	93M-BOA-NAT-LOT-09170
3	93M-BOA-NAT-LOT-01976
4	93M-BOA-NAT-LOT-20021
5	
6	
7	
8	
9	

6TH OF OCTOBER CITY RAIL TRANSIT MONORAIL

The Authority | Hill International Consultant | Main Contractor | Structural Designer

KEY PLAN:

SCALE: AS SHOWN | SHOP DRAWING | DATE: 08/29/2023

DRAWING TITLE: 6TH OF OCTOBER MONORAIL SERVICE WALKWAYS ZONE(1016) W177

REV	DATE	DSG	CHK	APP	AMENDMENTS	STATUS
B	08/29/2023	MAH	MAH	DRAW	ISSUED FOR INFORMATION	IFI
A	08/11/2022	MAH	MAH	DRAW	ISSUED FOR INFORMATION	IFI

Project Code	Rubric	Initiator	Lot	Ref	Number	Revision
93M	0476	ACC60	DEP	DWG	16357	B

Tekla structures

Approval is subject to approval of coordination package between multi-discipline.

REVIEWED WITH COMMENT
MONORAILS PROJECT

Length & Area & Weight per piece						
W176	PL8*154.2	S355JR	40	232.0	0.05	1.5
Mark	Profile	Grade	QTY	Length	Area	Weight

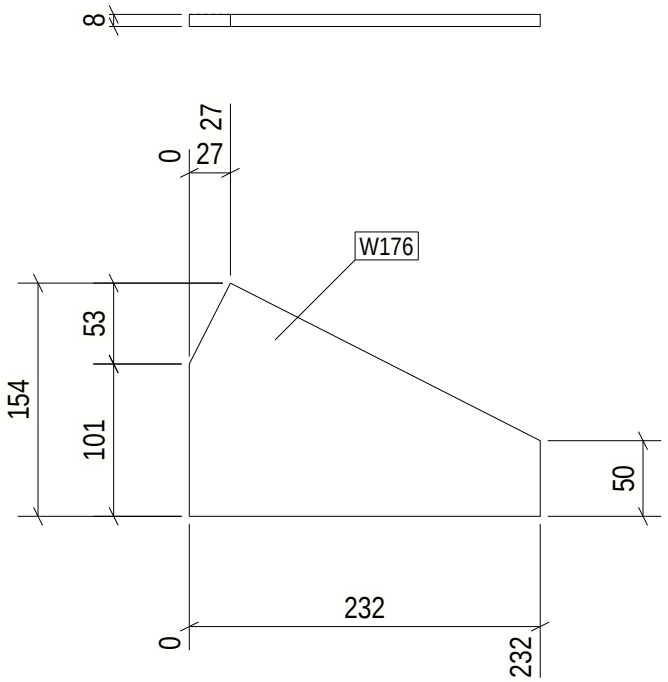

40 REQ'D AS DRAWN MK'D W176

6 October Monorail
Engineering Unit
Valid For Construction

GENERAL NOTES:

1. THE DIMENSIONS SHOWN ARE NOMINAL (IN MILLIMETERS), U.N.O.
2. WELD SIZESHALL BE AISC MINIMUM OF 6 mm UNLESS NOTED OTHERWISE.
3. ALL FIELD WELDS SHALL BE INSPECTED PER QUALITY ASSURANCE AND SPECIAL INSPECTIONS.

REFERENCE DRAWINGS

1	93M-BOA-NAT-LOT-04833
2	93M-BOA-NAT-LOT-09170
3	93M-BOA-NAT-LOT-01976
4	93M-BOA-NAT-LOT-20021
5	
6	
7	
8	
9	

6TH OF OCTOBER CITY RAIL TRANSIT MONORAIL

The Authority | Hill International Consultant | Main Contractor | Structural Designer

KEY PLAN:

SCALE: AS SHOWN | SHOP DRAWING | DATE: 08/29/2023

DRAWING TITLE: 6TH OF OCTOBER MONORAIL SERVICE WALKWAYS ZONE(1016) W176

REV	DATE	DSG	CHK	APP	AMENDMENTS	STATUS
B	08/29/2023	MAH	MAH	DRAW	ISSUED FOR INFORMATION	IFI
A	08/11/2022	MAH	MAH	DRAW	ISSUED FOR INFORMATION	IFI

Project Code	Rubric	Initiator	Lot	Ref	Number	Revision
9 3 M	0 4 7 6	A C C	6 0 D E P	D W G	1 6 3 5 8	B

Tekla structures

Approval is subject to approval of coordination package between multi-discipline.

REVIEWED WITH COMMENT
MONORAILS PROJECT

Length & Area & Weight per piece						
W174	PL8*155.4	S355JR	17	277.6	0.07	2.1
Mark	Profile	Grade	QTY	Length	Area	Weight

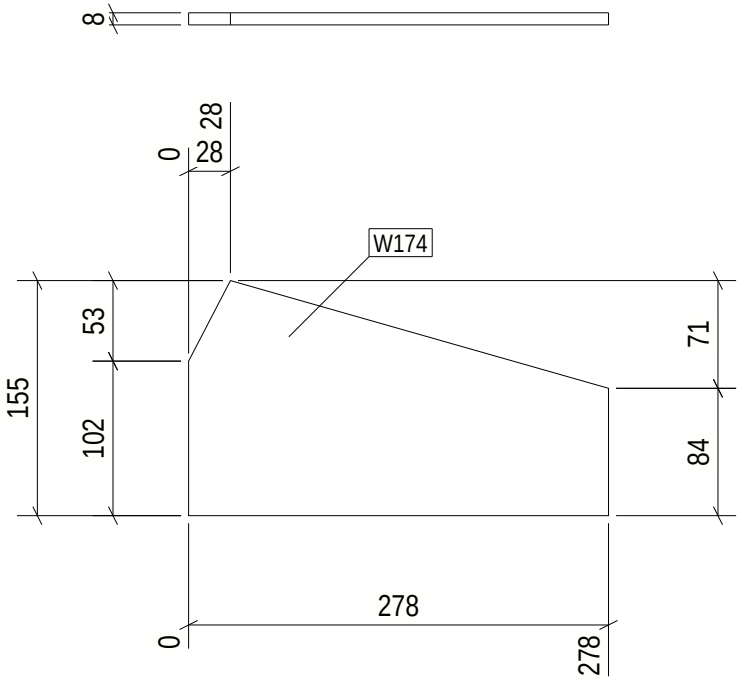

17 REQ'D AS DRAWN MK'D W174

6 October Monorail
Engineering Unit
Valid For Construction

GENERAL NOTES:

1. THE DIMENSIONS SHOWN ARE NOMINAL (IN MILLIMETERS), U.N.O.
2. WELD SIZESHALL BE AISC MINIMUM OF 6 mm UNLESS NOTED OTHERWISE.
3. ALL FIELD WELDS SHALL BE INSPECTED PER QUALITY ASSURANCE AND SPECIAL INSPECTIONS.

REFERENCE DRAWINGS

1	93M-BOA-NAT-LOT-04833
2	93M-BOA-NAT-LOT-09170
3	93M-BOA-NAT-LOT-01976
4	93M-BOA-NAT-LOT-20021
5	
6	
7	
8	
9	

6TH OF OCTOBER CITY RAIL TRANSIT MONORAIL

The Authority | Hill International Consultant | Main Contractor | Structural Designer

KEY PLAN:

SCALE: AS SHOWN | SHOP DRAWING | DATE: 08/29/2023

DRAWING TITLE: 6TH OF OCTOBER MONORAIL SERVICE WALKWAYS ZONE(1016) W174

REV	DATE	DSG	CHK	APP	AMENDMENTS	STATUS
B	08/29/2023	MAH	MAH	DRAW	ISSUED FOR INFORMATION	IFI
A	08/11/2022	MAH	MAH	DRAW	ISSUED FOR INFORMATION	IFI

Project Code	Rubric	Initiator	Lot	Ref	Number	Revision
9 3 M	0 4 7 6	A C C	6 0 D E P	D W G	1 6 3 5 9	B

Tekla structures

Approval is subject to approval of coordination package between multi-discipline.

REVIEWED WITH COMMENT
MONORAILS PROJECT

Length & Area & Weight per piece						
W173	PL8*154.2	S355JR	17	216.7	0.05	1.5
Mark	Profile	Grade	QTY	Length	Area	Weight

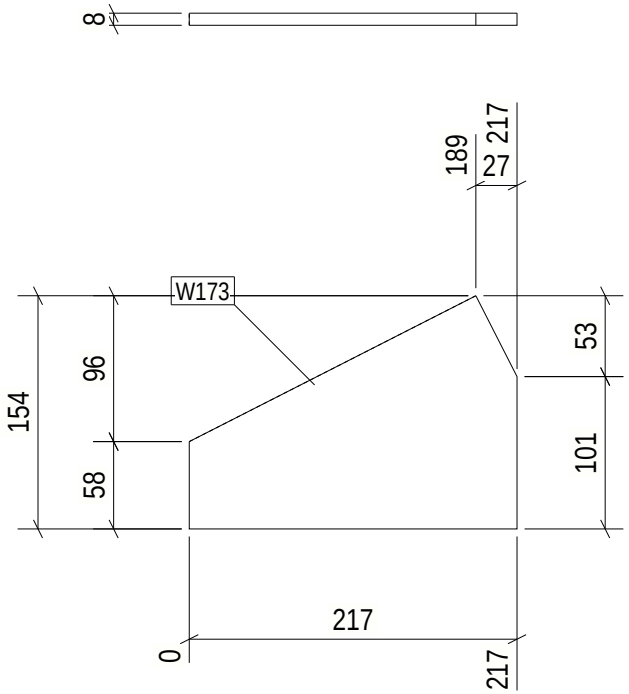

17 REQ'D AS DRAWN MK'D W173

6 October Monorail
Engineering Unit
Valid For Construction

GENERAL NOTES:

1. THE DIMENSIONS SHOWN ARE NOMINAL (IN MILLIMETERS), U.N.O.
2. WELD SIZESHALL BE AISC MINIMUM OF 6 mm UNLESS NOTED OTHERWISE.
3. ALL FIELD WELDS SHALL BE INSPECTED PER QUALITY ASSURANCE AND SPECIAL INSPECTIONS.

REFERENCE DRAWINGS

1	93M-BOA-NAT-LOT-04833
2	93M-BOA-NAT-LOT-09170
3	93M-BOA-NAT-LOT-01976
4	93M-BOA-NAT-LOT-20021
5	
6	
7	
8	
9	

6TH OF OCTOBER CITY RAIL TRANSIT MONORAIL

The Authority | Hill International Consultant | Main Contractor | Structural Designer

KEY PLAN:

SCALE: AS SHOWN | SHOP DRAWING | DATE: 08/29/2023

DRAWING TITLE: 6TH OF OCTOBER MONORAIL SERVICE WALKWAYS ZONE(1016) W173

REV	DATE	DSG	CHK	APP	AMENDMENTS	STATUS
B	08/29/2023	MAH	MAH	DRAW	ISSUED FOR INFORMATION	IFI
A	08/11/2022	MAH	MAH	DRAW	ISSUED FOR INFORMATION	IFI

Project Code	Rubric	Initiator	Lot	Ref	Number	Revision
93M	0476	ACC60	DEP	DWG	1630	B

Tekla structures

Approval is subject to approval of coordination package between multi-discipline.

REVIEWED WITH COMMENT
MONORAILS PROJECT

Length & Area & Weight per piece						
W172	PL8*166.7	S355JR	57	232.9	0.05	1.5
Mark	Profile	Grade	QTY	Length	Area	Weight

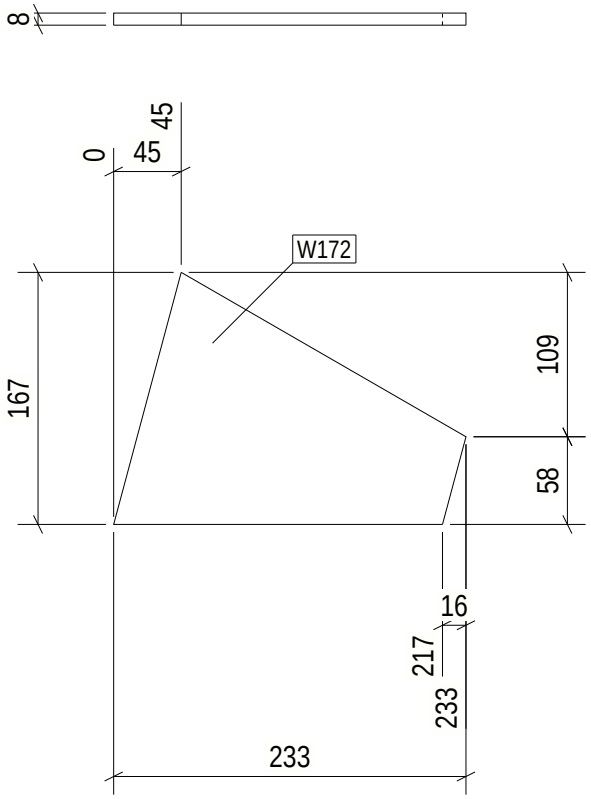

57 REQ'D AS DRAWN MK'D W172

6 October Monorail
Engineering Unit
Valid For Construction

GENERAL NOTES:

1. THE DIMENSIONS SHOWN ARE NOMINAL (IN MILLIMETERS), U.N.O.
2. WELD SIZESHALL BE AISC MINIMUM OF 6 mm UNLESS NOTED OTHERWISE.
3. ALL FIELD WELDS SHALL BE INSPECTED PER QUALITY ASSURANCE AND SPECIAL INSPECTIONS.

REFERENCE DRAWINGS

1	93M-BOA-NAT-LOT-04833
2	93M-BOA-NAT-LOT-09170
3	93M-BOA-NAT-LOT-01976
4	93M-BOA-NAT-LOT-20021
5	
6	
7	
8	
9	

6TH OF OCTOBER CITY RAIL TRANSIT MONORAIL

The Authority | Hill International Consultant | Main Contractor | Structural Designer

KEY PLAN:

SCALE: AS SHOWN | SHOP DRAWING | DATE: 08/29/2023

DRAWING TITLE: 6TH OF OCTOBER MONORAIL SERVICE WALKWAYS ZONE(1016) W172

REV	DATE	DSG	CHK	APP	AMENDMENTS	STATUS
B	08/29/2023	MAH	MAH	DRAW	ISSUED FOR INFORMATION	IFI
A	08/11/2022	MAH	MAH	DRAW	ISSUED FOR INFORMATION	IFI

Project Code	Rubric	Initiator	Lot	Ref	Number	Revision
9 3 M	0 4 7 6	A C C	6 0 D E P	D W G	1 6 3 6 1	B

Tekla structures

Approval is subject to approval of coordination package between multi-discipline.

REVIEWED WITH COMMENT
MONORAILS PROJECT

Length & Area & Weight per piece						
W155	PL8*155.4	S355JR	1	292.1	0.07	2.1
Mark	Profile	Grade	QTY	Length	Area	Weight

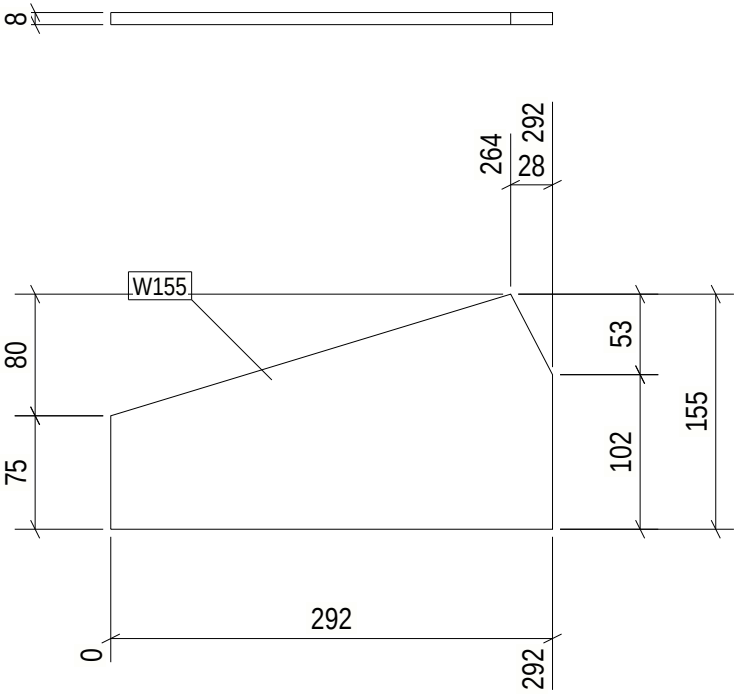

1 REQ'D AS DRAWN MK'D W155

6 October Monorail
Engineering Unit
Valid For Construction

Tekla structures

GENERAL NOTES:

1. THE DIMENSIONS SHOWN ARE NOMINAL (IN MILLIMETERS), U.N.O.
2. WELD SIZESHALL BE AISC MINIMUM OF 6 mm UNLESS NOTED OTHERWISE.
3. ALL FIELD WELDS SHALL BE INSPECTED PER QUALITY ASSURANCE AND SPECIAL INSPECTIONS.

REFERENCE DRAWINGS

1	93M-BOA-NAT-LOT-04833
2	93M-BOA-NAT-LOT-09170
3	93M-BOA-NAT-LOT-01976
4	93M-BOA-NAT-LOT-20021
5	
6	
7	
8	
9	

6TH OF OCTOBER CITY RAIL TRANSIT MONORAIL

The Authority — Hill International Consultant — Main Contractor — Structural Designer

KEY PLAN:

SCALE	SHOP DRAWING	DATE
AS SHOWN		08/29/2023

DRAWING TITLE
6TH OF OCTOBER MONORAIL SERVICE WALKWAYS ZONE(1016)
W155

REV	DATE	DSG	CHK	APP	AMENDMENTS	STATUS
B	08/29/2023	MAH	MAH	DRAW	ISSUED FOR INFORMATION	IFI
A	08/11/2022	MAH	MAH	DRAW	ISSUED FOR INFORMATION	IFI

Project Code	Rubric	Initiator	Lot	Ref	Number	Revision
9 3 M	0 4 7 6	A C C	6 0 D E P	D W G	1 6 3 6 2	B

Approval is subject to approval of coordination package between multi-discipline.

REVIEWED WITH COMMENT
MONORAILS PROJECT

Length & Area & Weight per piece						
W154	PL8*154.2	S355JR	1	232.0	0.05	1.5
Mark	Profile	Grade	QTY	Length	Area	Weight

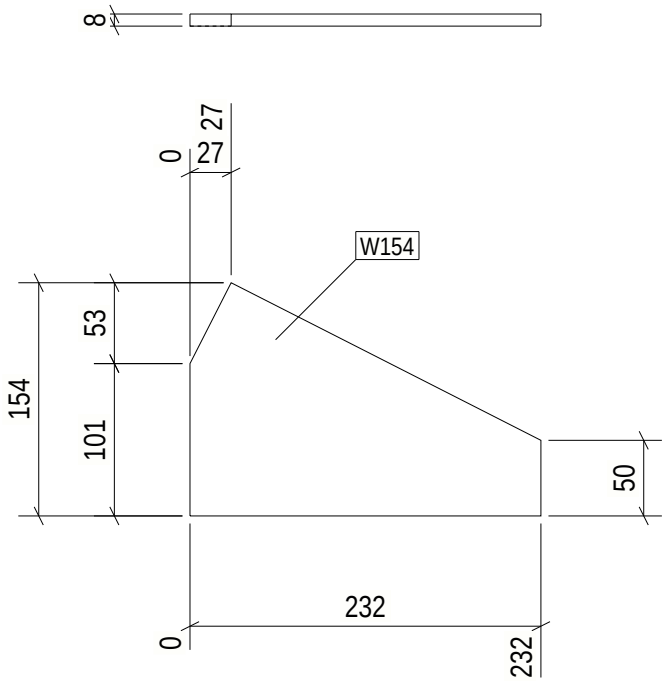

1 REQ'D AS DRAWN MK'D W154

6 October Monorail
Engineering Unit
Valid For Construction

GENERAL NOTES:

1. THE DIMENSIONS SHOWN ARE NOMINAL (IN MILLIMETERS), U.N.O.
2. WELD SIZESHALL BE AISC MINIMUM OF 6 mm UNLESS NOTED OTHERWISE.
3. ALL FIELD WELDS SHALL BE INSPECTED PER QUALITY ASSURANCE AND SPECIAL INSPECTIONS.

REFERENCE DRAWINGS

1	93M-BOA-NAT-LOT-04833
2	93M-BOA-NAT-LOT-09170
3	93M-BOA-NAT-LOT-01976
4	93M-BOA-NAT-LOT-20021
5	
6	
7	
8	
9	

6TH OF OCTOBER CITY RAIL TRANSIT MONORAIL

The Authority | Hill International Consultant | Main Contractor | Structural Designer

KEY PLAN:

SCALE: AS SHOWN | SHOP DRAWING | DATE: 08/29/2023

DRAWING TITLE: 6TH OF OCTOBER MONORAIL SERVICE WALKWAYS ZONE(1016) W154

REV	DATE	DSG	CHK	APP	AMENDMENTS	STATUS
B	08/29/2023	MAH	MAH	DRAW	ISSUED FOR INFORMATION	IFI
A	08/11/2022	MAH	MAH	DRAW	ISSUED FOR INFORMATION	IFI

Project Code	Rubric	Initiator	Lot	Ref	Number	Revision
9 3 M	0 4 7 6	A C C	6 0 D E P	D W G	1 6 3 6 3	B

Tekla structures

Approval is subject to approval of coordination package between multi-discipline.

REVIEWED WITH COMMENT
MONORAILS PROJECT

Length & Area & Weight per piece						
W153	PL8*166.7	S355JR	1	232.9	0.05	1.5
Mark	Profile	Grade	QTY	Length	Area	Weight

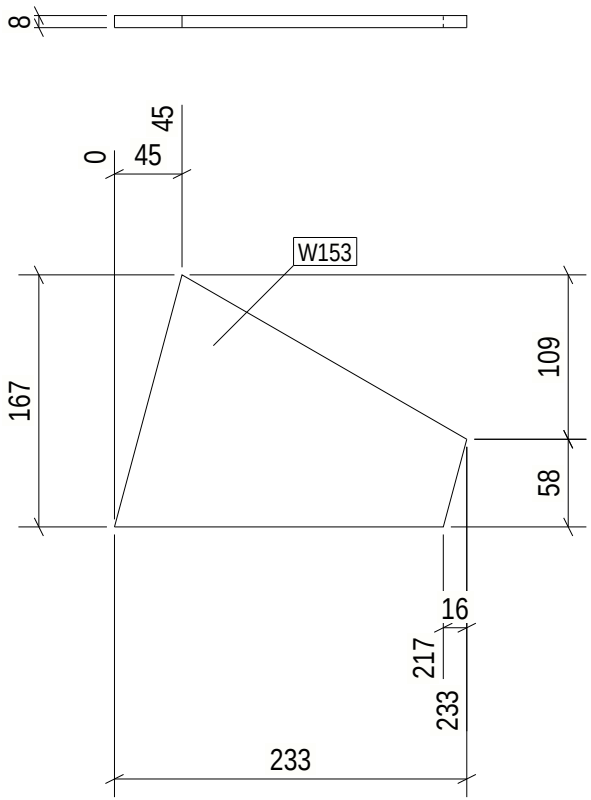

1 REQ'D AS DRAWN MK'D W153

6 October Monorail
Engineering Unit
Valid For Construction

Tekla structures

GENERAL NOTES:

1. THE DIMENSIONS SHOWN ARE NOMINAL (IN MILLIMETERS), U.N.O.
2. WELD SIZESHALL BE AISC MINIMUM OF 6 mm UNLESS NOTED OTHERWISE.
3. ALL FIELD WELDS SHALL BE INSPECTED PER QUALITY ASSURANCE AND SPECIAL INSPECTIONS.

REFERENCE DRAWINGS

1	93M-BOA-NAT-LOT-04833
2	93M-BOA-NAT-LOT-09170
3	93M-BOA-NAT-LOT-01976
4	93M-BOA-NAT-LOT-20021
5	
6	
7	
8	
9	

6TH OF OCTOBER CITY RAIL TRANSIT MONORAIL

The Authority | Hill International Consultant | Main Contractor | Structural Designer

KEY PLAN:

SCALE: AS SHOWN | SHOP DRAWING | DATE: 08/29/2023

DRAWING TITLE: 6TH OF OCTOBER MONORAIL SERVICE WALKWAYS ZONE(1016) W153

REV	DATE	DSG	CHK	APP	AMENDMENTS	STATUS
B	08/29/2023	MAH	MAH	DRAW	ISSUED FOR INFORMATION	IFI
A	08/11/2022	MAH	MAH	DRAW	ISSUED FOR INFORMATION	IFI

Project Code	Rubric	Initiator	Lot	Ref	Number	Revision
93M	0476	ACC	60DEP	DWG	16364	B

Approval is subject to approval of coordination package between multi-discipline.

REVIEWED WITH COMMENT
MONORAILS PROJECT

Length & Area & Weight per piece						
W152	ROD12	S355JR	2	901.5	0.03	0.7
Mark	Profile	Grade	QTY	Length	Area	Weight

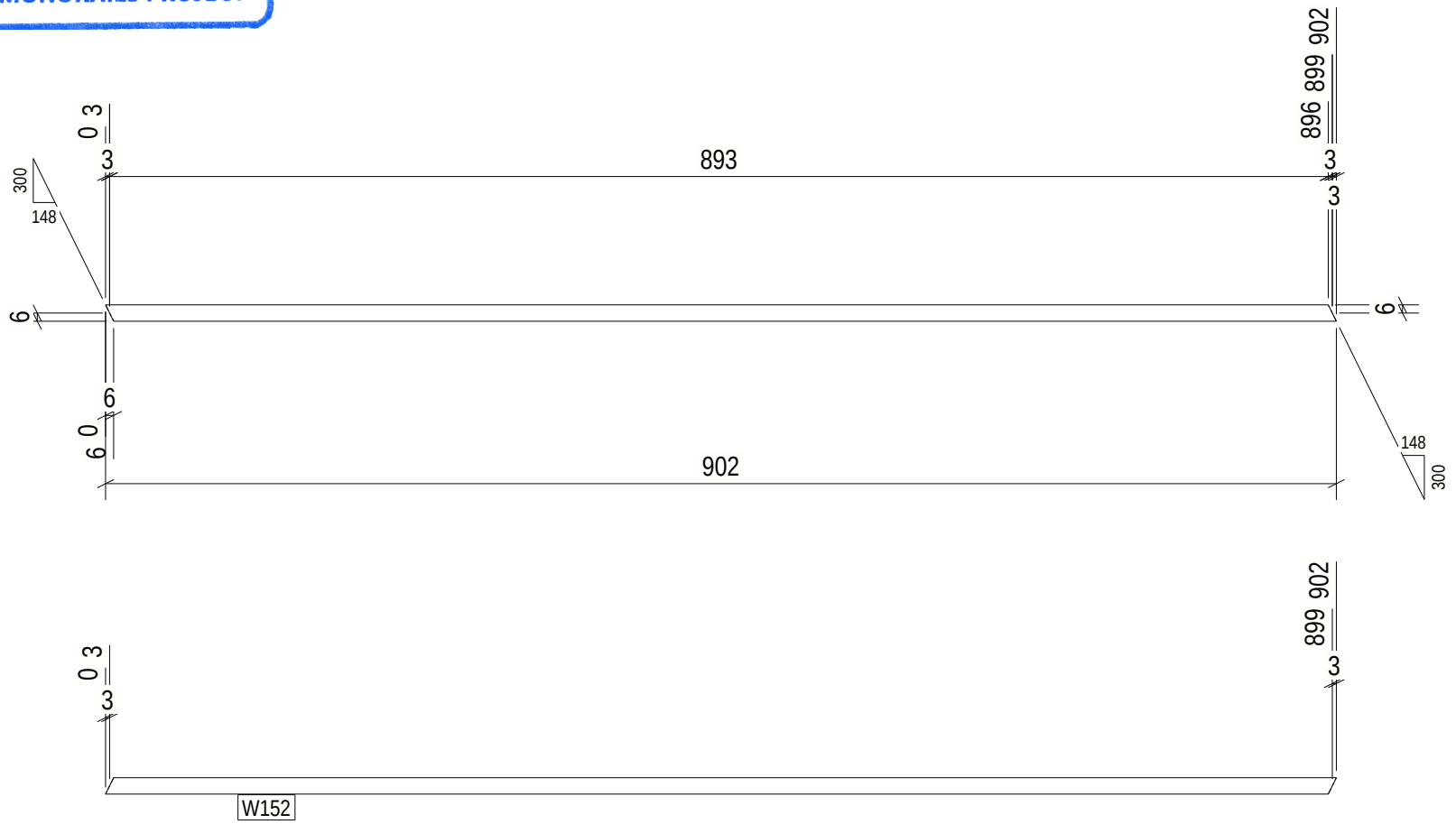

2 REQ'D AS DRAWN MK'D W152

6 October Monorail
Engineering Unit
Valid For Construction

GENERAL NOTES:

1. THE DIMENSIONS SHOWN ARE NOMINAL (IN MILLIMETERS), U.N.O.
2. WELD SIZESHALL BE AISC MINIMUM OF 6 mm UNLESS NOTED OTHERWISE.
3. ALL FIELD WELDS SHALL BE INSPECTED PER QUALITY ASSURANCE AND SPECIAL INSPECTIONS.

REFERENCE DRAWINGS

1	93M-BOA-NAT-LOT-04833
2	93M-BOA-NAT-LOT-09170
3	93M-BOA-NAT-LOT-01976
4	93M-BOA-NAT-LOT-20021
5	
6	
7	
8	
9	

6TH OF OCTOBER CITY RAIL TRANSIT MONORAIL

The Authority | Hill International Consultant | Main Contractor | Structural Designer

KEY PLAN:

SCALE: AS SHOWN | SHOP DRAWING | DATE: 08/29/2023

DRAWING TITLE: 6TH OF OCTOBER MONORAIL SERVICE WALKWAYS ZONE(1016) W152

REV	DATE	DSG	CHK	APP	AMENDMENTS	STATUS
B	08/29/2023	MAH	MAH	DRAW	ISSUED FOR INFORMATION	IFI
A	08/11/2022	MAH	MAH	DRAW	ISSUED FOR INFORMATION	IFI

Project Code	Rubric	Initiator	Lot	Ref	Number	Revision
93M	0476	ACC60	DEP	DWG	1635	B

Tekla structures

Approval is subject to approval of coordination package between multi-discipline.

REVIEWED WITH COMMENT
MONORAILS PROJECT

Length & Area & Weight per piece						
W151	ROD12	S355JR	3	901.7	0.03	0.7
Mark	Profile	Grade	QTY	Length	Area	Weight

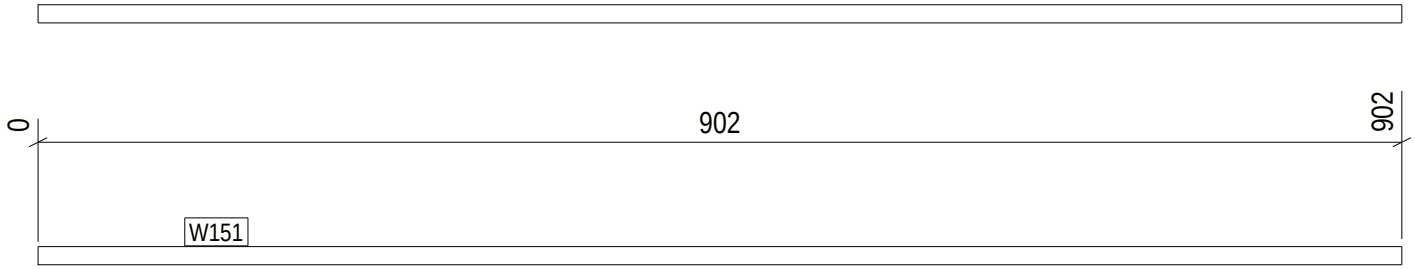

3 REQ'D AS DRAWN MK'D W151

6 October Monorail
Engineering Unit
Valid For Construction

GENERAL NOTES:

1. THE DIMENSIONS SHOWN ARE NOMINAL (IN MILLIMETERS), U.N.O.
2. WELD SIZESHALL BE AISC MINIMUM OF 6 mm UNLESS NOTED OTHERWISE.
3. ALL FIELD WELDS SHALL BE INSPECTED PER QUALITY ASSURANCE AND SPECIAL INSPECTIONS.

REFERENCE DRAWINGS

1	93M-BOA-NAT-LOT-04833
2	93M-BOA-NAT-LOT-09170
3	93M-BOA-NAT-LOT-01976
4	93M-BOA-NAT-LOT-20021
5	
6	
7	
8	
9	

6TH OF OCTOBER CITY RAIL TRANSIT MONORAIL

The Authority | Hill International Consultant | Main Contractor | Structural Designer

KEY PLAN:

SCALE: AS SHOWN | SHOP DRAWING | DATE: 08/29/2023

DRAWING TITLE: 6TH OF OCTOBER MONORAIL SERVICE WALKWAYS ZONE(1016) W151

REV	DATE	DSG	CHK	APP	AMENDMENTS	STATUS
B	08/29/2023	MAH	MAH	DRAW	ISSUED FOR INFORMATION	IFI
A	06/11/2022	MAH	MAH	DRAW	ISSUED FOR INFORMATION	IFI

Project Code	Rubric	Initiator	Lot	Ref	Number	Revision
93M	0476	ACC60	DEP	DWG	1636	B

Tekla structures

Approval is subject to approval of coordination package between multi-discipline.

REVIEWED WITH COMMENT
MONORAILS PROJECT

Length & Area & Weight per piece						
W150	CHS48.3*4.0	S235JR	3	75.4	0.01	0.3
Mark	Profile	Grade	QTY	Length	Area	Weight

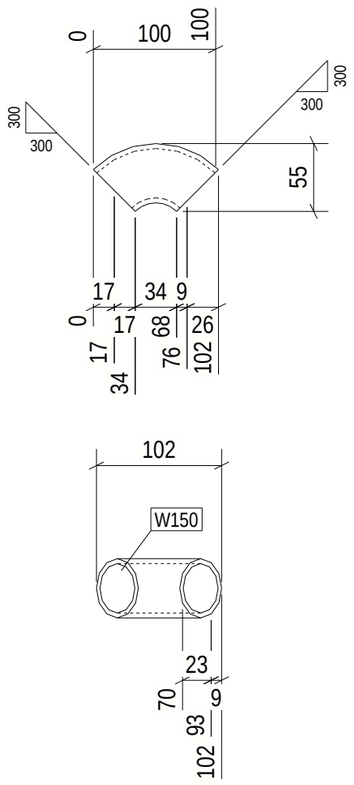

3 REQ'D AS DRAWN MK'D W150

6 October Monorail
Engineering Unit
Valid For Construction

GENERAL NOTES:

1. THE DIMENSIONS SHOWN ARE NOMINAL (IN MILLIMETERS), U.N.O.
2. WELD SIZESHALL BE AISC MINIMUM OF 6 mm UNLESS NOTED OTHERWISE.
3. ALL FIELD WELDS SHALL BE INSPECTED PER QUALITY ASSURANCE AND SPECIAL INSPECTIONS.

REFERENCE DRAWINGS

1	93M-BOA-NAT-LOT-04833
2	93M-BOA-NAT-LOT-09170
3	93M-BOA-NAT-LOT-01976
4	93M-BOA-NAT-LOT-20021
5	
6	
7	
8	
9	

6TH OF OCTOBER CITY RAIL TRANSIT MONORAIL

The Authority | Consultant: Hill International | Main Contractor: Orascom Construction / Bombardier | Structural Designer: Innova Transportation

KEY PLAN:

REV	DATE	DSG.	CHK.	APP.	AMENDMENTS	STATUS
B	08/29/2023	M.KH	M.KH	DR.M.M	ISSUED FOR INFORMATION	IFI
A	09/21/2022	M.KH	M.KH	DR.M.M	ISSUED FOR INFORMATION	IFI

SCALE	SHOPDRAWING	DATE
AS SHOWN		09/29/2023

DRAWING TITLE
6TH OF OCTOBER MONORAIL
SERVICE WALKWAYS
ZONE(1016)
W150

Project Code	Rubric	Initiator	Lot	Ref	Number	Revision
93M	0476	ACC60DEP	DWG	1636	7	B

Tekla structures

Approval is subject to approval of coordination package between multi-discipline.

REVIEWED WITH COMMENT
MONORAILS PROJECT

Length & Area & Weight per piece						
W149	CHS48.3*4.0	S235JR	1	108.2	0.02	0.5
Mark	Profile	Grade	QTY	Length	Area	Weight

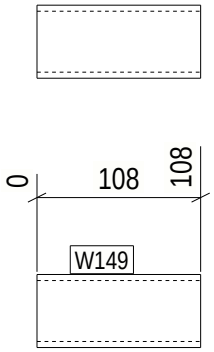

1 REQ'D AS DRAWN MK'D W149

6 October Monorail
Engineering Unit
Valid For Construction

Tekla structures

GENERAL NOTES:

1. THE DIMENSIONS SHOWN ARE NOMINAL (IN MILLIMETERS), U.N.O.
2. WELD SIZESHALL BE AISC MINIMUM OF 6 mm UNLESS NOTED OTHERWISE.
3. ALL FIELD WELDS SHALL BE INSPECTED PER QUALITY ASSURANCE AND SPECIAL INSPECTIONS.

REFERENCE DRAWINGS

1	93M-BOA-NAT-LOT-04833
2	93M-BOA-NAT-LOT-09170
3	93M-BOA-NAT-LOT-01976
4	93M-BOA-NAT-LOT-20021
5	
6	
7	
8	
9	

6TH OF OCTOBER CITY RAIL TRANSIT MONORAIL

The Authority | Hill International Consultant | Main Contractor | Structural Designer

KEY PLAN:

SCALE: AS SHOWN | SHOP DRAWING | DATE: 08/29/2023

DRAWING TITLE: 6TH OF OCTOBER MONORAIL SERVICE WALKWAYS ZONE(1016) W149

REV	DATE	DSG	CHK	APP	AMENDMENTS	STATUS
B	08/29/2023	MAH	MAH	DRAW	ISSUED FOR INFORMATION	IFI
A	08/11/2022	MAH	MAH	DRAW	ISSUED FOR INFORMATION	IFI

Project Code	Rubric	Initiator	Lot	Ref	Number	Revision
93M	0476	ACC60	DEP	DWG	1636	B

Approval is subject to approval of coordination package between multi-discipline.

REVIEWED WITH COMMENT
MONORAILS PROJECT

Length & Area & Weight per piece						
W148	CHS48.3*4.0	S235JR	1	113.1	0.02	0.5
Mark	Profile	Grade	QTY	Length	Area	Weight

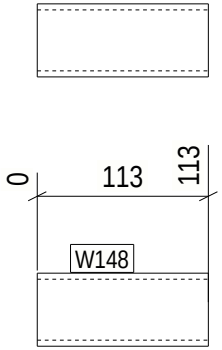

1 REQ'D AS DRAWN MK'D W148

6 October Monorail
Engineering Unit
Valid For Construction

Tekla structures

GENERAL NOTES:

1. THE DIMENSIONS SHOWN ARE NOMINAL (IN MILLIMETERS), U.N.O.
2. WELD SIZESHALL BE AISC MINIMUM OF 6 mm UNLESS NOTED OTHERWISE.
3. ALL FIELD WELDS SHALL BE INSPECTED PER QUALITY ASSURANCE AND SPECIAL INSPECTIONS.

REFERENCE DRAWINGS

1	93M-BOA-NAT-LOT-04833
2	93M-BOA-NAT-LOT-09170
3	93M-BOA-NAT-LOT-01976
4	93M-BOA-NAT-LOT-20021
5	
6	
7	
8	
9	

6TH OF OCTOBER CITY RAIL TRANSIT MONORAIL

The Authority | Hill International Consultant | Main Contractor | Structural Designer

KEY PLAN:

SCALE	SHOP DRAWING	DATE
AS SHOWN		08/29/2023

DRAWING TITLE
6TH OF OCTOBER MONORAIL
SERVICE WALKWAYS
ZONE(1016)
W148

REV	DATE	DSG	CHK	APP	AMENDMENTS	STATUS
B	08/29/2023	MAH	MAH	DRAW	ISSUED FOR INFORMATION	IFI
A	08/11/2022	MAH	MAH	DRAW	ISSUED FOR INFORMATION	IFI

Project Code	Rubric	Initiator	Lot	Ref	Number	Revision
93M	0476	ACC60	DEP	DWG	16369	B

Approval is subject to approval of coordination package between multi-discipline.

REVIEWED WITH COMMENT
MONORAILS PROJECT

Length & Area & Weight per piece						
W147	PL8*223.9	S355JR	58	624.9	0.25	7.4
Mark	Profile	Grade	QTY	Length	Area	Weight

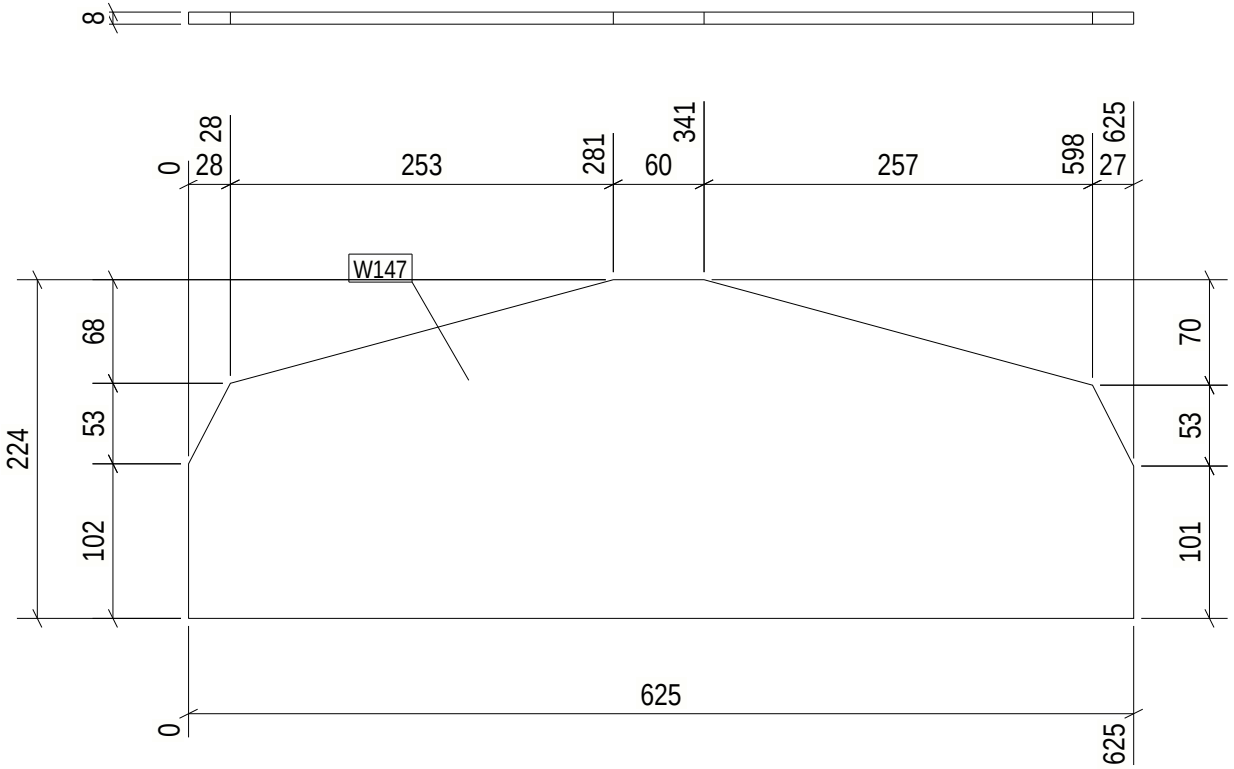

58 REQ'D AS DRAWN MK'D W147

6 October Monorail
Engineering Unit
Valid For Construction

GENERAL NOTES:

1. THE DIMENSIONS SHOWN ARE NOMINAL (IN MILLIMETERS), U.N.O.
2. WELD SIZESHALL BE AISC MINIMUM OF 6 mm UNLESS NOTED OTHERWISE.
3. ALL FIELD WELDS SHALL BE INSPECTED PER QUALITY ASSURANCE AND SPECIAL INSPECTIONS.

REFERENCE DRAWINGS

1	93M-BOA-NAT-LOT-04833
2	93M-BOA-NAT-LOT-09170
3	93M-BOA-NAT-LOT-01976
4	93M-BOA-NAT-LOT-20021
5	
6	
7	
8	
9	

6TH OF OCTOBER CITY RAIL TRANSIT MONORAIL

The Authority | Hill International Consultant | Main Contractor | Structural Designer

KEY PLAN:

SCALE: AS SHOWN | SHOP DRAWING | DATE: 08/29/2023

DRAWING TITLE: 6TH OF OCTOBER MONORAIL SERVICE WALKWAYS ZONE(1016) W147

REV	DATE	DSG	CHK	APP	AMENDMENTS	STATUS
B	08/29/2023	MAH	MAH	DRAW	ISSUED FOR INFORMATION	IFI
A	08/11/2022	MAH	MAH	DRAW	ISSUED FOR INFORMATION	IFI

Project Code	Rubric	Initiator	Lot	Ref	Number	Revision
9 3 M	0 4 7 6	A C C	6 0 D E P	D W G	1 6 3 7 0	B

Tekla structures

Approval is subject to approval of coordination package between multi-discipline.

REVIEWED WITH COMMENT
MONORAILS PROJECT

Length & Area & Weight per piece						
W146	L70*7	S235JR	58	825.0	0.23	6.0
Mark	Profile	Grade	QTY	Length	Area	Weight

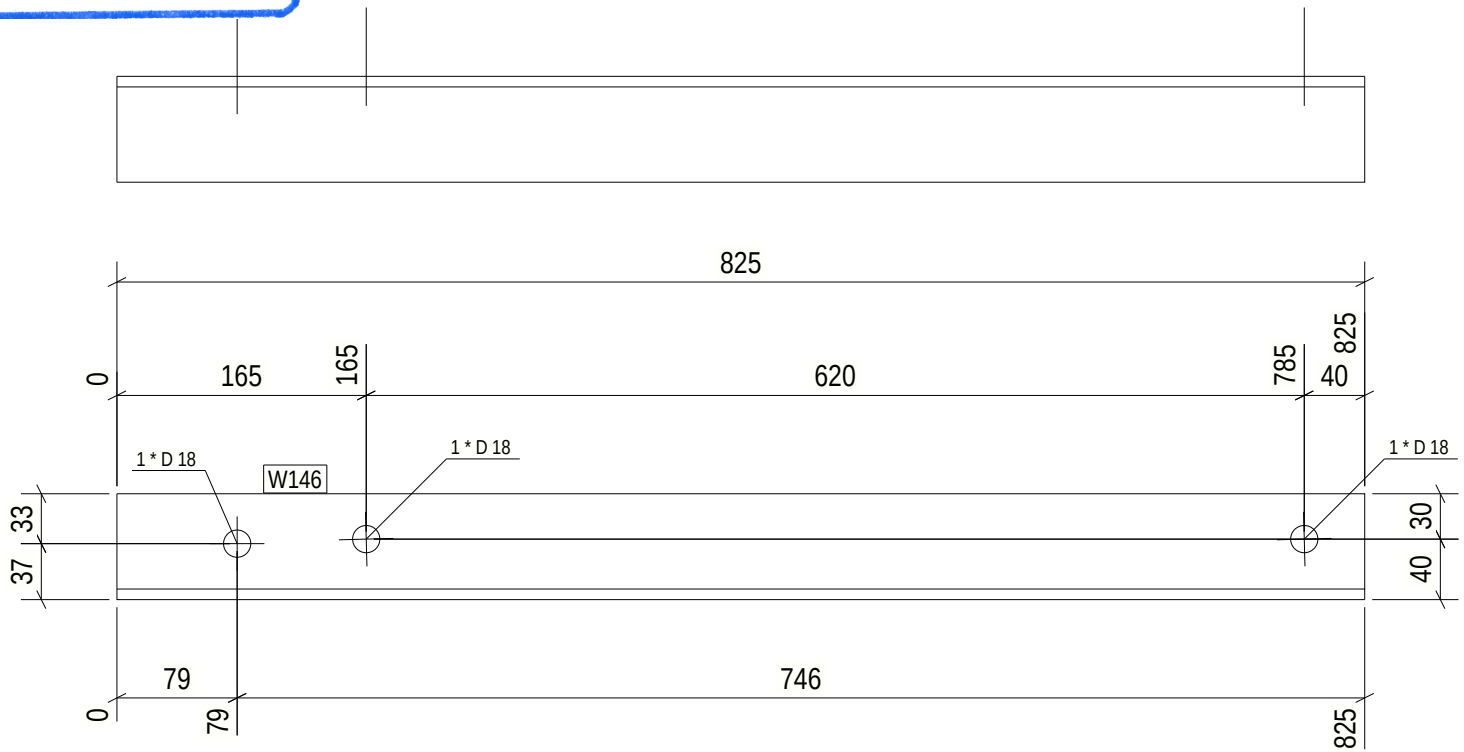

58 REQ'D AS DRAWN MK'D W146

6 October Monorail
Engineering Unit
Valid For Construction

Tekla structures

GENERAL NOTES:

1. THE DIMENSIONS SHOWN ARE NOMINAL (IN MILLIMETERS), U.N.O.
2. WELD SIZESHALL BE AISC MINIMUM OF 6 mm UNLESS NOTED OTHERWISE.
3. ALL FIELD WELDS SHALL BE INSPECTED PER QUALITY ASSURANCE AND SPECIAL INSPECTIONS.

REFERENCE DRAWINGS

1	93M-BOA-NAT-LOT-04833
2	93M-BOA-NAT-LOT-09170
3	93M-BOA-NAT-LOT-01976
4	93M-BOA-NAT-LOT-20021
5	
6	
7	
8	
9	

6TH OF OCTOBER CITY RAIL TRANSIT MONORAIL

The Authority — Hill International Consultant — Main Contractor — Structural Designer

KEY PLAN:

SCALE: AS SHOWN | SHOP DRAWING | DATE: 08/29/2023

DRAWING TITLE: 6TH OF OCTOBER MONORAIL SERVICE WALKWAYS ZONE(1016) W146

REV	DATE	DSG	CHK	APP	AMENDMENTS	STATUS
B	08/29/2023	MAH	MAH	DRAW	ISSUED FOR INFORMATION	IFI
A	08/11/2022	MAH	MAH	DRAW	ISSUED FOR INFORMATION	IFI

Project Code	Rubric	Initiator	Lot	Ref	Number	Revision
93M	0476	ACC60	DEP	DWG	1637	1 B

Approval is subject to approval of coordination package between multi-discipline.

REVIEWED WITH COMMENT
MONORAILS PROJECT

Length & Area & Weight per piece						
W145	CHS48.3*4.0	S235JR	1	172.7	0.03	0.8
Mark	Profile	Grade	QTY	Length	Area	Weight

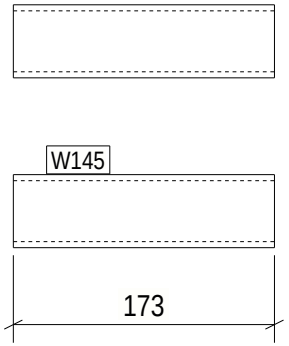

1 REQ'D AS DRAWN MK'D W145

6 October Monorail
Engineering Unit
Valid For Construction

Tekla structures

GENERAL NOTES:

1. THE DIMENSIONS SHOWN ARE NOMINAL (IN MILLIMETERS), U.N.O.
2. WELD SIZESHALL BE AISC MINIMUM OF 6 mm UNLESS NOTED OTHERWISE.
3. ALL FIELD WELDS SHALL BE INSPECTED PER QUALITY ASSURANCE AND SPECIAL INSPECTIONS.

REFERENCE DRAWINGS

1	93M-BOA-NAT-LOT-04833
2	93M-BOA-NAT-LOT-09170
3	93M-BOA-NAT-LOT-01976
4	93M-BOA-NAT-LOT-20021
5	
6	
7	
8	
9	

6TH OF OCTOBER CITY RAIL TRANSIT MONORAIL

The Authority — Hill International Consultant — Main Contractor — Structural Designer

KEY PLAN:

SCALE	SHOP DRAWING	DATE
AS SHOWN		08/29/2023

DRAWING TITLE
6TH OF OCTOBER MONORAIL
SERVICE WALKWAYS
ZONE(1016)
W145

REV	DATE	DSG	CHK	APP	AMENDMENTS	STATUS
B	08/29/2023	MAH	MAH	DRAW	ISSUED FOR INFORMATION	IFI
A	08/11/2022	MAH	MAH	DRAW	ISSUED FOR INFORMATION	IFI

Project Code	Rubric	Initiator	Lot	Ref	Number	Revision
9 3 M	0 4 7 6	A C C	6 0 D E P	D W G	1 6 3 7 2	B

Approval is subject to approval of coordination package between multi-discipline.

REVIEWED WITH COMMENT
MONORAILS PROJECT

Length & Area & Weight per piece						
W144	UPN160	S235JR	58	2368.0	1.30	44.6
Mark	Profile	Grade	QTY	Length	Area	Weight

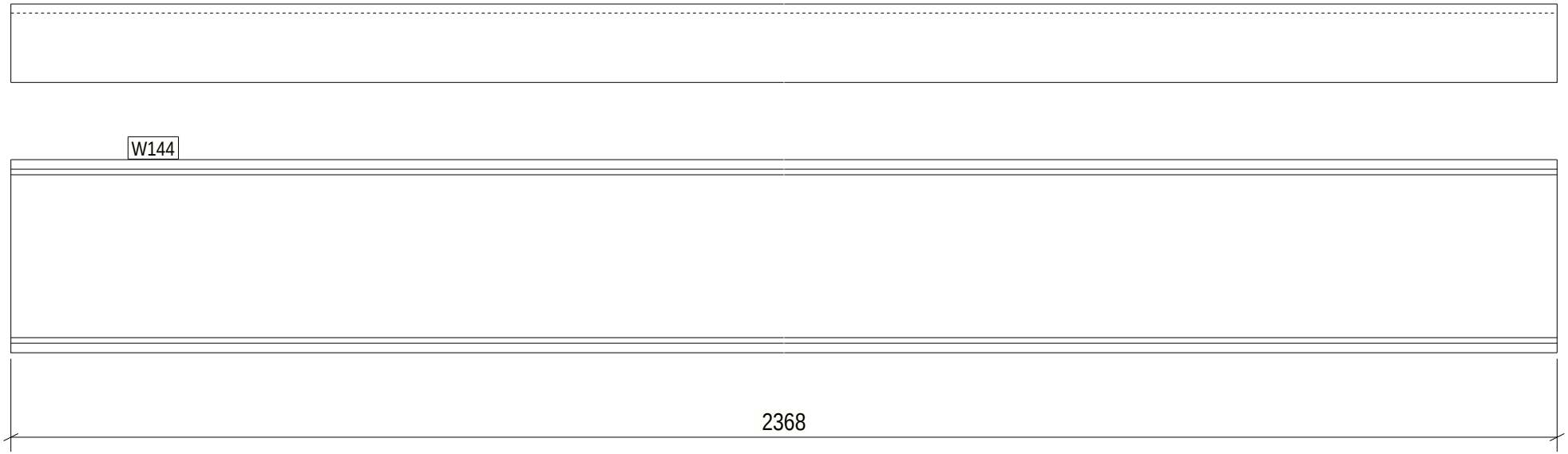

58 REQ'D AS DRAWN MK'D W144

6 October Monorail
Engineering Unit
Valid For Construction

Tekla structures

GENERAL NOTES:

1. THE DIMENSIONS SHOWN ARE NOMINAL (IN MILLIMETERS), U.N.O.
2. WELD SIZESHALL BE AISC MINIMUM OF 6 mm UNLESS NOTED OTHERWISE.
3. ALL FIELD WELDS SHALL BE INSPECTED PER QUALITY ASSURANCE AND SPECIAL INSPECTIONS.

REFERENCE DRAWINGS

1	93M-BOA-NAT-LOT-04833
2	93M-BOA-NAT-LOT-09170
3	93M-BOA-NAT-LOT-01976
4	93M-BOA-NAT-LOT-20021
5	
6	
7	
8	
9	

6TH OF OCTOBER CITY RAIL TRANSIT MONORAIL

The Authority — Hill International Consultant — Main Contractor — Structural Designer

KEY PLAN:

SCALE: AS SHOWN | SHOP DRAWING | DATE: 08/29/2023

DRAWING TITLE: 6TH OF OCTOBER MONORAIL SERVICE WALKWAYS ZONE(1016) W144

REV	DATE	DSG	CHK	APP	AMENDMENTS	STATUS
B	08/29/2023	MAH	MAH	DRAW	ISSUED FOR INFORMATION	IFI
A	08/11/2022	MAH	MAH	DRAW	ISSUED FOR INFORMATION	IFI

Project Code	Rubric	Initiator	Lot	Ref	Number	Revision
93M	0476	ACC60	DEP	DWG	1637	B

Approval is subject to approval of coordination package between multi-discipline.

REVIEWED WITH COMMENT
MONORAILS PROJECT

Length & Area & Weight per piece						
W143	L60*6	S235JR	58	1050.5	0.25	5.6
Mark	Profile	Grade	QTY	Length	Area	Weight

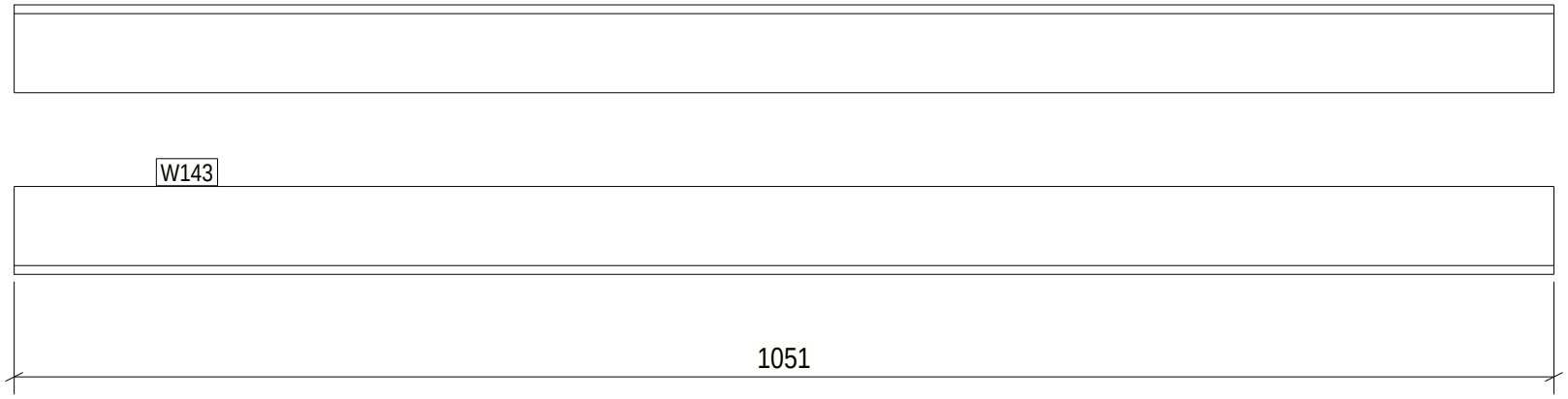

58 REQ'D AS DRAWN MK'D W143

6 October Monorail
Engineering Unit
Valid For Construction

Tekla structures

GENERAL NOTES:

1. THE DIMENSIONS SHOWN ARE NOMINAL (IN MILLIMETERS), U.N.O.
2. WELD SIZESHALL BE AISC MINIMUM OF 6 mm UNLESS NOTED OTHERWISE.
3. ALL FIELD WELDS SHALL BE INSPECTED PER QUALITY ASSURANCE AND SPECIAL INSPECTIONS.

REFERENCE DRAWINGS

1	93M-BOA-NAT-LOT-04833
2	93M-BOA-NAT-LOT-09170
3	93M-BOA-NAT-LOT-01976
4	93M-BOA-NAT-LOT-20021
5	
6	
7	
8	
9	

6TH OF OCTOBER CITY RAIL TRANSIT MONORAIL

The Authority — Hill International Consultant — Main Contractor — Structural Designer

KEY PLAN:

SCALE: AS SHOWN | SHOP DRAWING | DATE: 08/29/2023

DRAWING TITLE: 6TH OF OCTOBER MONORAIL SERVICE WALKWAYS ZONE(1016) W143

REV	DATE	DSG	CHK	APP	AMENDMENTS	STATUS
B	08/29/2023	MAH	MAH	DRAW	ISSUED FOR INFORMATION	IFI
A	08/11/2022	MAH	MAH	DRAW	ISSUED FOR INFORMATION	IFI

Project Code	Rubric	Initiator	Lot	Ref	Number	Revision
93M	0476	ACC60	DEP	DWG	16374	B

Approval is subject to approval of coordination package between multi-discipline.

REVIEWED WITH COMMENT
MONORAILS PROJECT

Length & Area & Weight per piece						
W142	PL10*25	S355JR	1	120.4	0.01	0.2
Mark	Profile	Grade	QTY	Length	Area	Weight

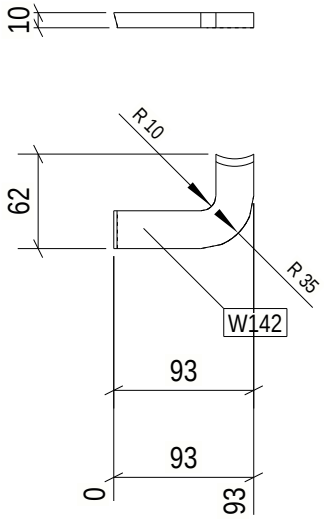

1 REQ'D AS DRAWN MK'D W142

6 October Monorail
Engineering Unit
Valid For Construction

GENERAL NOTES:

1. THE DIMENSIONS SHOWN ARE NOMINAL (IN MILLIMETERS), U.N.O.
2. WELD SIZESHALL BE AISC MINIMUM OF 6 mm UNLESS NOTED OTHERWISE.
3. ALL FIELD WELDS SHALL BE INSPECTED PER QUALITY ASSURANCE AND SPECIAL INSPECTIONS.

REFERENCE DRAWINGS

1	93M-BOA-NAT-LOT-04833
2	93M-BOA-NAT-LOT-09170
3	93M-BOA-NAT-LOT-01976
4	93M-BOA-NAT-LOT-20021
5	
6	
7	
8	
9	

6TH OF OCTOBER CITY RAIL TRANSIT MONORAIL

The Authority | Hill International Consultant | Main Contractor | Structural Designer

KEY PLAN:

SCALE: AS SHOWN | SHOP DRAWING | DATE: 08/29/2023

DRAWING TITLE: 6TH OF OCTOBER MONORAIL SERVICE WALKWAYS ZONE(1016) W142

REV	DATE	DSG	CHK	APP	AMENDMENTS	STATUS
B	08/29/2023	MAH	MAH	DRAW	ISSUED FOR INFORMATION	IFI
A	08/11/2022	MAH	MAH	DRAW	ISSUED FOR INFORMATION	IFI

Project Code	Rubric	Initiator	Lot	Ref	Number	Revision
9 3 M	0 4 7 6	A C C	6 0 D E P	D W G	1 6 3 7 5	B

Tekla structures

Approval is subject to approval of coordination package between multi-discipline.

REVIEWED WITH COMMENT
MONORAILS PROJECT

Length & Area & Weight per piece						
W138	L60*6	S235JR	58	1034.2	0.25	5.6
Mark	Profile	Grade	QTY	Length	Area	Weight

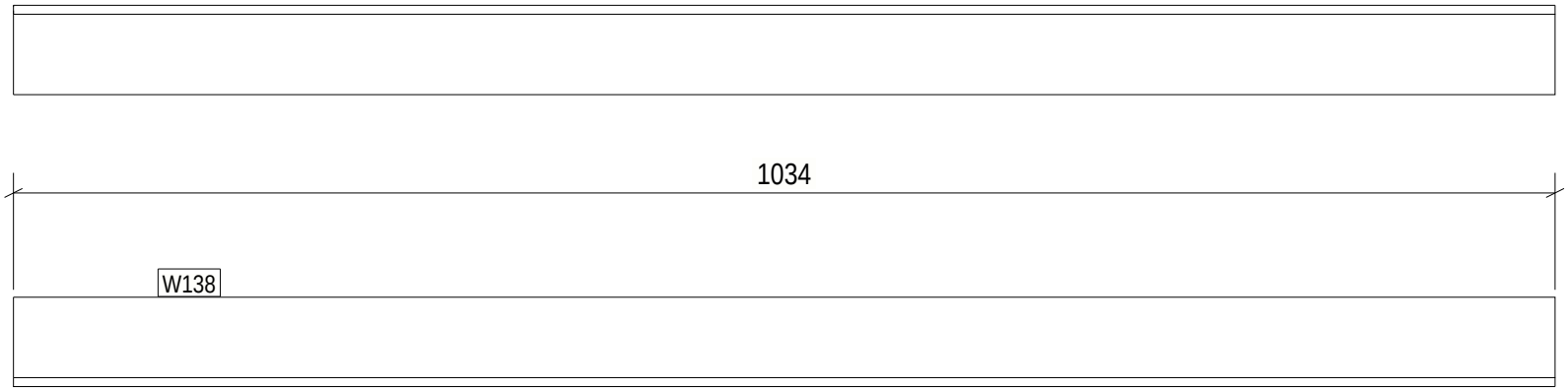

58 REQ'D AS DRAWN MK'D W138

6 October Monorail
Engineering Unit
Valid For Construction

Tekla structures

GENERAL NOTES:

1. THE DIMENSIONS SHOWN ARE NOMINAL (IN MILLIMETERS), U.N.O.
2. WELD SIZESHALL BE AISC MINIMUM OF 6 mm UNLESS NOTED OTHERWISE.
3. ALL FIELD WELDS SHALL BE INSPECTED PER QUALITY ASSURANCE AND SPECIAL INSPECTIONS.

REFERENCE DRAWINGS

1	93M-BOA-NAT-LOT-04833
2	93M-BOA-NAT-LOT-09170
3	93M-BOA-NAT-LOT-01976
4	93M-BOA-NAT-LOT-20021
5	
6	
7	
8	
9	

6TH OF OCTOBER CITY RAIL TRANSIT MONORAIL

The Authority — Hill International Consultant — Main Contractor — Structural Designer

KEY PLAN:

SCALE	SHOP DRAWING	DATE
AS SHOWN		08/29/2023

DRAWING TITLE

6TH OF OCTOBER MONORAIL
SERVICE WALKWAYS
ZONE(1016)
W138

REV	DATE	DSG	CHK	APP	AMENDMENTS	STATUS
B	08/29/2023	MAH	MAH	DRAW	ISSUED FOR INFORMATION	IFI
A	08/11/2022	MAH	MAH	DRAW	ISSUED FOR INFORMATION	IFI

Project Code	Rubric	Initiator	Lot	Ref	Number	Revision
93M	0476	ACC60	DEP	DWG	1637	B

Approval is subject to approval of coordination package between multi-discipline.

REVIEWED WITH COMMENT
MONORAILS PROJECT

Length & Area & Weight per piece						
W137	L60*6	S235JR	58	516.1	0.13	2.8
Mark	Profile	Grade	QTY	Length	Area	Weight

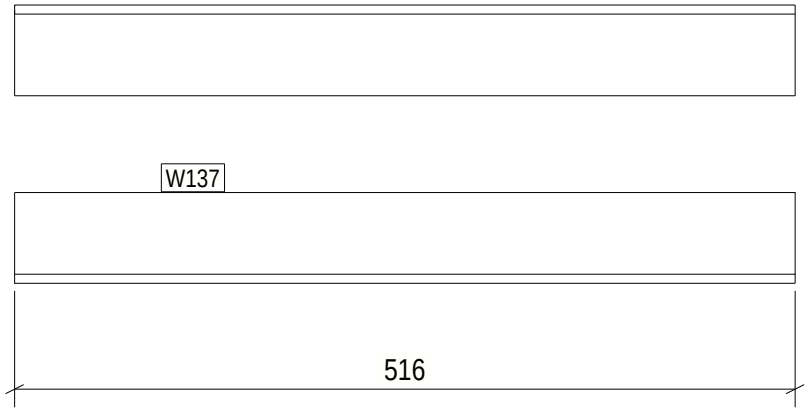

58 REQ'D AS DRAWN MK'D W137

6 October Monorail
Engineering Unit
Valid For Construction

Tekla structures

GENERAL NOTES:

1. THE DIMENSIONS SHOWN ARE NOMINAL (IN MILLIMETERS), U.N.O.
2. WELD SIZESHALL BE AISC MINIMUM OF 6 mm UNLESS NOTED OTHERWISE.
3. ALL FIELD WELDS SHALL BE INSPECTED PER QUALITY ASSURANCE AND SPECIAL INSPECTIONS.

REFERENCE DRAWINGS

1	93M-BOA-NAT-LOT-04833
2	93M-BOA-NAT-LOT-09170
3	93M-BOA-NAT-LOT-01976
4	93M-BOA-NAT-LOT-20021
5	
6	
7	
8	
9	

6TH OF OCTOBER CITY RAIL TRANSIT MONORAIL

The Authority — Hill International Consultant — Main Contractor — Structural Designer

KEY PLAN:

REV	DATE	DSG	CHK	APP	AMENDMENTS	STATUS
B	08/29/2023	MAH	MAH	DRAW	ISSUED FOR INFORMATION	IFI
A	08/11/2022	MAH	MAH	DRAW	ISSUED FOR INFORMATION	IFI

SCALE: AS SHOWN | SHOP DRAWING | DATE: 08/29/2023

DRAWING TITLE: 6TH OF OCTOBER MONORAIL SERVICE WALKWAYS ZONE(1016) W137

Project Code	Rubric	Initiator	Lot	Ref	Number	Revision
93M	0476	ACC	60DEP	DWG	1637	B

Approval is subject to approval of coordination package between multi-discipline.

REVIEWED WITH COMMENT
MONORAILS PROJECT

Length & Area & Weight per piece						
W134	L70*7	S235JR	58	825.0	0.23	6.0
Mark	Profile	Grade	QTY	Length	Area	Weight

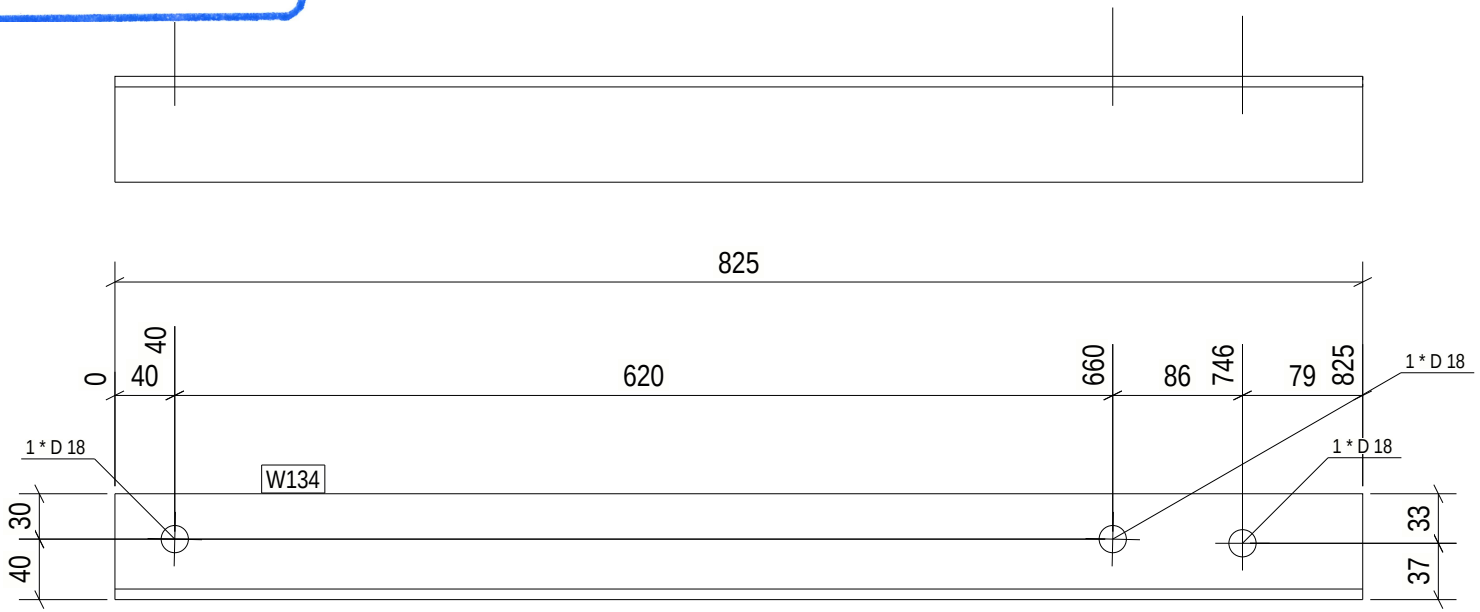

58 REQ'D AS DRAWN MK'D W134

6 October Monorail
Engineering Unit
Valid For Construction

GENERAL NOTES:

1. THE DIMENSIONS SHOWN ARE NOMINAL (IN MILLIMETERS), U.N.O.
2. WELD SIZESHALL BE AISC MINIMUM OF 6 mm UNLESS NOTED OTHERWISE.
3. ALL FIELD WELDS SHALL BE INSPECTED PER QUALITY ASSURANCE AND SPECIAL INSPECTIONS.

REFERENCE DRAWINGS

1	93M-BOA-NAT-LOT-04833
2	93M-BOA-NAT-LOT-09170
3	93M-BOA-NAT-LOT-01976
4	93M-BOA-NAT-LOT-20021
5	
6	
7	
8	
9	

6TH OF OCTOBER CITY RAIL TRANSIT MONORAIL

The Authority | Hill International Consultant | Main Contractor | Structural Designer

KEY PLAN:

SCALE: AS SHOWN | SHOP DRAWING | DATE: 08/29/2023

DRAWING TITLE: 6TH OF OCTOBER MONORAIL SERVICE WALKWAYS ZONE(1016) W134

REV	DATE	DSG	CHK	APP	AMENDMENTS	STATUS
B	08/29/2023	MAH	MAH	DRAW	ISSUED FOR INFORMATION	IFI
A	08/11/2022	MAH	MAH	DRAW	ISSUED FOR INFORMATION	IFI

Project Code	Rubric	Initiator	Lot	Ref	Number	Revision
9 3 M	0 4 7 6	A C C	6 0 D E P	D W G	1 6 3 7 8	B

Tekla structures

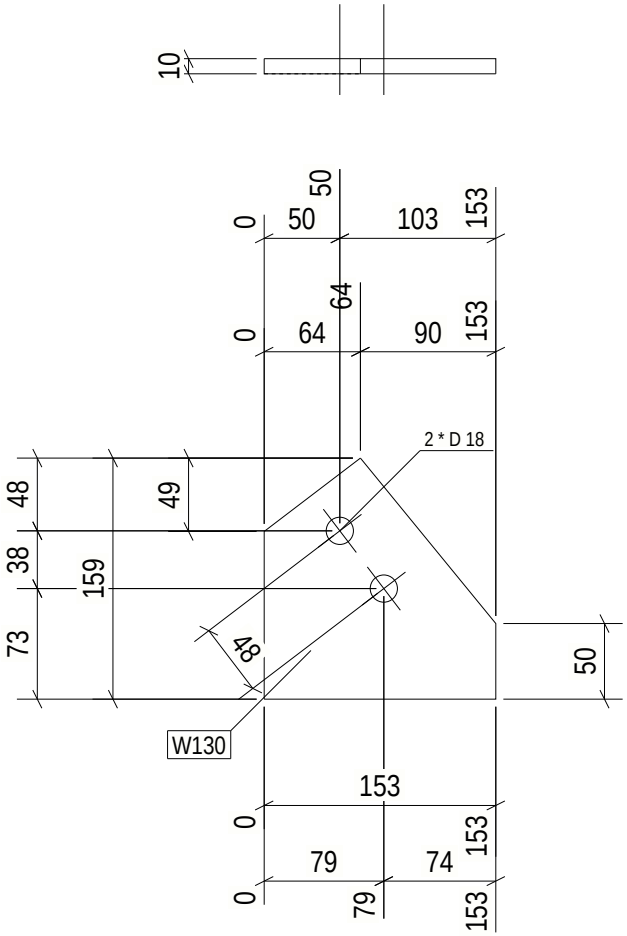

Length & Area & Weight per piece						
W130	PL10*153.1	S355JR	1	159.4	0.04	1.4
Mark	Profile	Grade	QTY	Length	Area	Weight

Approval is subject to approval of coordination package between multi-discipline.

REVIEWED WITH COMMENT
MONORAILS PROJECT

1 REQ'D AS DRAWN MK'D W130

6 October Monorail
Engineering Unit
Valid For Construction

Tekla structures

GENERAL NOTES:

1. THE DIMENSIONS SHOWN ARE NOMINAL (IN MILLIMETERS), U.N.O.
2. WELD SIZESHALL BE AISC MINIMUM OF 6 mm UNLESS NOTED OTHERWISE.
3. ALL FIELD WELDS SHALL BE INSPECTED PER QUALITY ASSURANCE AND SPECIAL INSPECTIONS.

REFERENCE DRAWINGS

1	93M-BOA-NAT-LOT-04833
2	93M-BOA-NAT-LOT-09170
3	93M-BOA-NAT-LOT-01976
4	93M-BOA-NAT-LOT-20021
5	
6	
7	
8	
9	

6TH OF OCTOBER CITY RAIL TRANSIT MONORAIL

The Authority | Hill International Consultant | Main Contractor | Structural Designer

KEY PLAN:

SCALE: AS SHOWN | SHOP DRAWING | DATE: 08/29/2023

DRAWING TITLE: 6TH OF OCTOBER MONORAIL SERVICE WALKWAYS ZONE(1016) W130

REV	DATE	DSG	CHK	APP	AMENDMENTS	STATUS
B	08/29/2023	MAH	MAH	DRAW	ISSUED FOR INFORMATION	IFI
A	08/11/2022	MAH	MAH	DRAW	ISSUED FOR INFORMATION	IFI

Project Code	Rubric	Initiator	Lot	Ref	Number	Revision
9 3 M	0 4 7 6	A C C	6 0 D E P	D W G	1 6 3 7 9	B

Approval is subject to approval of coordination package between multi-discipline.

REVIEWED WITH COMMENT
MONORAILS PROJECT

Length & Area & Weight per piece						
W129	L60*6	S235JR	58	550.0	0.13	3.0
Mark	Profile	Grade	QTY	Length	Area	Weight

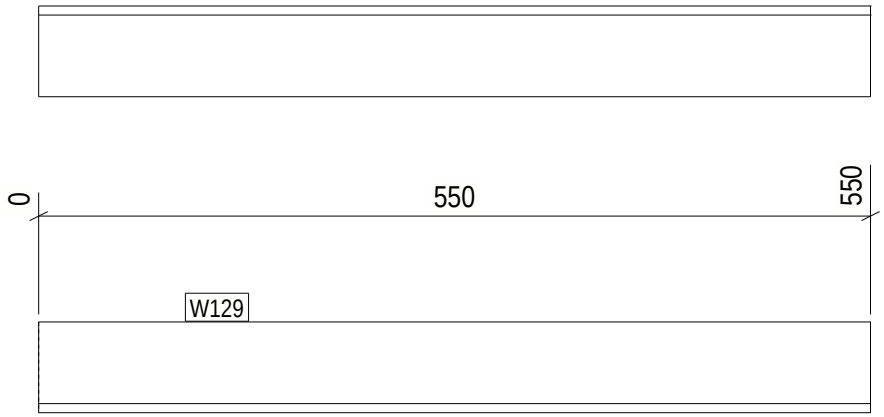

58 REQ'D AS DRAWN MK'D W129

6 October Monorail
Engineering Unit
Valid For Construction

Tekla structures

GENERAL NOTES:

1. THE DIMENSIONS SHOWN ARE NOMINAL (IN MILLIMETERS), U.N.O.
2. WELD SIZESHALL BE AISC MINIMUM OF 6 mm UNLESS NOTED OTHERWISE.
3. ALL FIELD WELDS SHALL BE INSPECTED PER QUALITY ASSURANCE AND SPECIAL INSPECTIONS.

REFERENCE DRAWINGS

1	93M-BOA-NAT-LOT-04833
2	93M-BOA-NAT-LOT-09170
3	93M-BOA-NAT-LOT-01976
4	93M-BOA-NAT-LOT-20021
5	
6	
7	
8	
9	

6TH OF OCTOBER CITY RAIL TRANSIT MONORAIL

The Authority | Hill International Consultant | Main Contractor | Structural Designer

KEY PLAN:

SCALE: AS SHOWN | SHOP DRAWING | DATE: 08/29/2023

DRAWING TITLE: 6TH OF OCTOBER MONORAIL SERVICE WALKWAYS ZONE(1016) W129

REV	DATE	DSG	CHK	APP	AMENDMENTS	STATUS
B	08/29/2023	MAH	MAH	DRAW	ISSUED FOR INFORMATION	IFI
A	06/11/2022	MAH	MAH	DRAW	ISSUED FOR INFORMATION	IFI

Project Code	Rubric	Initiator	Lot	Ref	Number	Revision
93M	0476	ACC60	DEP	DWG	16380	B

Length & Area & Weight per piece						
W128	PL10*154.1	S355JR	8	159.4	0.04	1.4
Mark	Profile	Grade	QTY	Length	Area	Weight

Approval is subject to approval of coordination package between multi-discipline.

REVIEWED WITH COMMENT
MONORAILS PROJECT

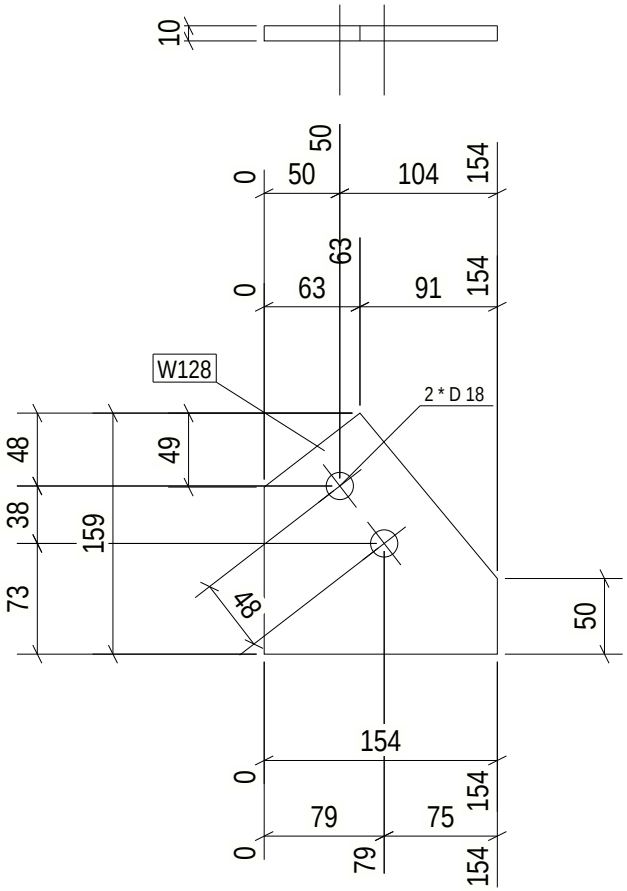

8 REQ'D AS DRAWN MK'D W128

6 October Monorail
Engineering Unit
Valid For Construction

Tekla structures

GENERAL NOTES:

1. THE DIMENSIONS SHOWN ARE NOMINAL (IN MILLIMETERS), U.N.O.
2. WELD SIZESHALL BE AISC MINIMUM OF 6 mm UNLESS NOTED OTHERWISE.
3. ALL FIELD WELDS SHALL BE INSPECTED PER QUALITY ASSURANCE AND SPECIAL INSPECTIONS.

REFERENCE DRAWINGS

1	93M-BOA-NAT-LOT-04833
2	93M-BOA-NAT-LOT-09170
3	93M-BOA-NAT-LOT-01976
4	93M-BOA-NAT-LOT-20021
5	
6	
7	
8	
9	

6TH OF OCTOBER CITY RAIL TRANSIT MONORAIL

The Authority — Hill International Consultant — Main Contractor — Structural Designer

KEY PLAN:

SCALE: AS SHOWN | SHOP DRAWING | DATE: 08/29/2023

DRAWING TITLE: 6TH OF OCTOBER MONORAIL SERVICE WALKWAYS ZONE(1016) W128

REV	DATE	DSG	CHK	APP	AMENDMENTS	STATUS
B	08/29/2023	MAH	MAH	DRAW	ISSUED FOR INFORMATION	IFI
A	08/11/2022	MAH	MAH	DRAW	ISSUED FOR INFORMATION	IFI

Project Code	Rubric	Initiator	Lot	Ref	Number	Revision
9 3 M	0 4 7 6	A C C	6 0 D E P	D W G	1 6 3 8 1	B

Approval is subject to approval of coordination package between multi-discipline.

REVIEWED WITH COMMENT
MONORAILS PROJECT

Length & Area & Weight per piece						
W123	PL10*25	S355JR	1	121.2	0.01	0.2
Mark	Profile	Grade	QTY	Length	Area	Weight

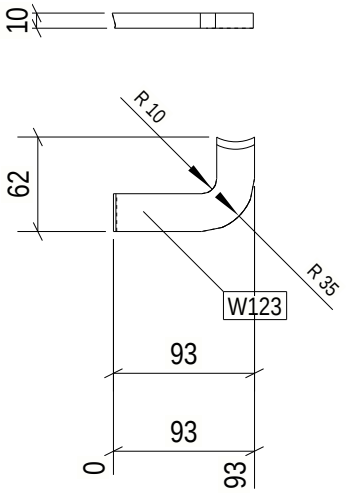

1 REQ'D AS DRAWN MK'D W123

6 October Monorail
Engineering Unit
Valid For Construction

GENERAL NOTES:

1. THE DIMENSIONS SHOWN ARE NOMINAL (IN MILLIMETERS), U.N.O.
2. WELD SIZESHALL BE AISC MINIMUM OF 6 mm UNLESS NOTED OTHERWISE.
3. ALL FIELD WELDS SHALL BE INSPECTED PER QUALITY ASSURANCE AND SPECIAL INSPECTIONS.

REFERENCE DRAWINGS

1	93M-BOA-NAT-LOT-04833
2	93M-BOA-NAT-LOT-09170
3	93M-BOA-NAT-LOT-01976
4	93M-BOA-NAT-LOT-20021
5	
6	
7	
8	
9	

6TH OF OCTOBER CITY RAIL TRANSIT MONORAIL

The Authority | Hill International Consultant | Main Contractor | Structural Designer

KEY PLAN:

REV	DATE	DSG	CHK	APP	AMENDMENTS	STATUS
B	08/29/2023	MAH	MAH	DRAW	ISSUED FOR INFORMATION	IFI
A	08/11/2022	MAH	MAH	DRAW	ISSUED FOR INFORMATION	IFI

SCALE: AS SHOWN | SHOP DRAWING | DATE: 08/29/2023

DRAWING TITLE: 6TH OF OCTOBER MONORAIL SERVICE WALKWAYS ZONE(1016) W123

Project Code	Rubric	Initiator	Lot	Ref	Number	Revision
93M	0476	ACC60	DEP	DWG	16382	B

Tekla structures

Approval is subject to approval of coordination package between multi-discipline.

REVIEWED WITH COMMENT
MONORAILS PROJECT

Length & Area & Weight per piece						
W122	PL10*25	S355JR	1	122.2	0.01	0.2
Mark	Profile	Grade	QTY	Length	Area	Weight

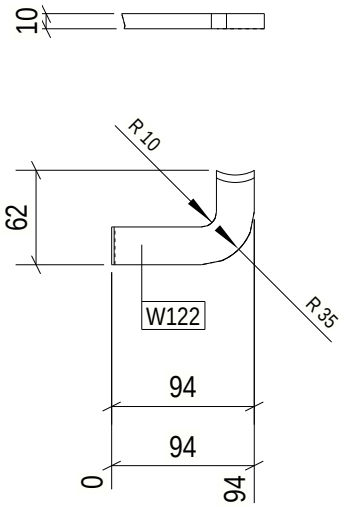

1 REQ'D AS DRAWN MK'D W122

6 October Monorail
Engineering Unit
Valid For Construction

GENERAL NOTES:

1. THE DIMENSIONS SHOWN ARE NOMINAL (IN MILLIMETERS), U.N.O.
2. WELD SIZESHALL BE AISC MINIMUM OF 6 mm UNLESS NOTED OTHERWISE.
3. ALL FIELD WELDS SHALL BE INSPECTED PER QUALITY ASSURANCE AND SPECIAL INSPECTIONS.

REFERENCE DRAWINGS

1	93M-BOA-NAT-LOT-04833
2	93M-BOA-NAT-LOT-09170
3	93M-BOA-NAT-LOT-01976
4	93M-BOA-NAT-LOT-20021
5	
6	
7	
8	
9	

6TH OF OCTOBER CITY RAIL TRANSIT MONORAIL

The Authority | Hill International Consultant | Main Contractor | Structural Designer

KEY PLAN:

SCALE	SHOP DRAWING	DATE
AS SHOWN		08/29/2023

DRAWING TITLE
6TH OF OCTOBER MONORAIL
SERVICE WALKWAYS
ZONE(1016)
W122

REV	DATE	DSG	CHK	APP	AMENDMENTS	STATUS
B	08/29/2023	MAH	MAH	DRAW	ISSUED FOR INFORMATION	IFI
A	08/11/2022	MAH	MAH	DRAW	ISSUED FOR INFORMATION	IFI

Project Code	Rubric	Initiator	Lot	Ref	Number	Revision
9 3 M	0 4 7 6	A C C	6 0 D E P	D W G	1 6 3 8 3	B

Tekla structures

Approval is subject to approval of coordination package between multi-discipline.

REVIEWED WITH COMMENT
MONORAILS PROJECT

Length & Area & Weight per piece						
W121	UPN140	S235JR	1	600.0	0.29	9.6
Mark	Profile	Grade	QTY	Length	Area	Weight

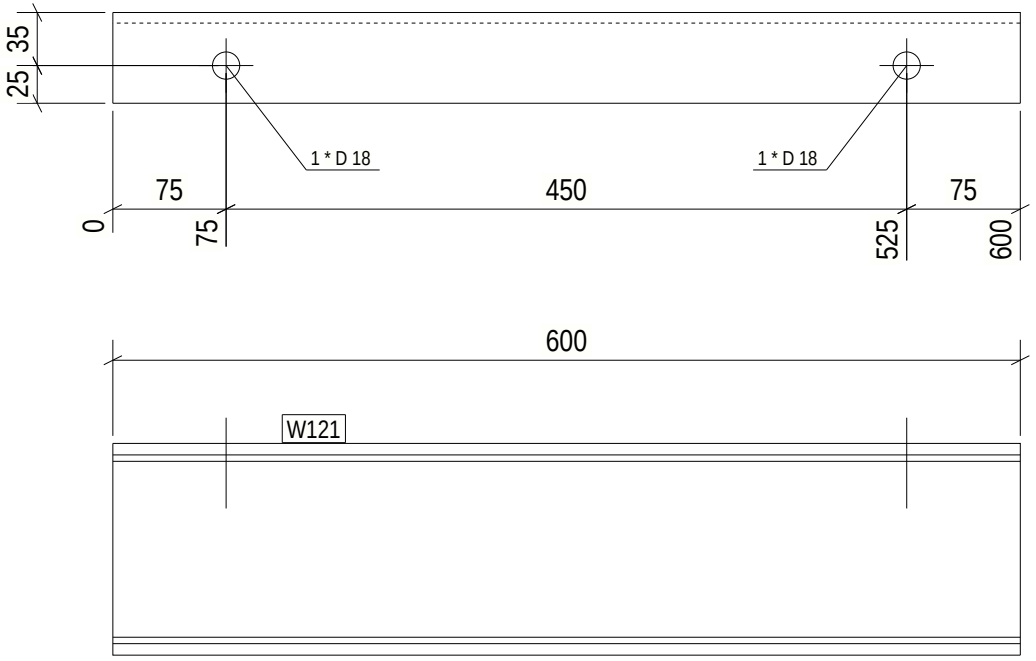

1 REQ'D AS DRAWN MK'D W121

6 October Monorail
Engineering Unit
Valid For Construction

GENERAL NOTES:

1. THE DIMENSIONS SHOWN ARE NOMINAL (IN MILLIMETERS), U.N.O.
2. WELD SIZESHALL BE AISC MINIMUM OF 6 mm UNLESS NOTED OTHERWISE.
3. ALL FIELD WELDS SHALL BE INSPECTED PER QUALITY ASSURANCE AND SPECIAL INSPECTIONS.

REFERENCE DRAWINGS

1	93M-BOA-NAT-LOT-04833
2	93M-BOA-NAT-LOT-09170
3	93M-BOA-NAT-LOT-01976
4	93M-BOA-NAT-LOT-20021
5	
6	
7	
8	
9	

6TH OF OCTOBER CITY RAIL TRANSIT MONORAIL

The Authority | Hill International Consultant | Main Contractor | Structural Designer

KEY PLAN:

SCALE: AS SHOWN | SHOP DRAWING | DATE: 08/29/2023

DRAWING TITLE: 6TH OF OCTOBER MONORAIL SERVICE WALKWAYS ZONE(1016) W121

REV	DATE	DSG	CHK	APP	AMENDMENTS	STATUS
B	08/29/2023	MAH	MAH	DRAW	ISSUED FOR INFORMATION	IFI
A	08/11/2022	MAH	MAH	DRAW	ISSUED FOR INFORMATION	IFI

Project Code	Rubric	Initiator	Lot	Ref	Number	Revision
9 3 M	0 4 7 6	A C C	6 0 D E P	D W G	1 6 3 8 4	B

Tekla structures

Approval is subject to approval of coordination package between multi-discipline.

REVIEWED WITH COMMENT
MONORAILS PROJECT

Length & Area & Weight per piece						
W120	PL10*80	S355JR	4	149.9	0.03	0.9
Mark	Profile	Grade	QTY	Length	Area	Weight

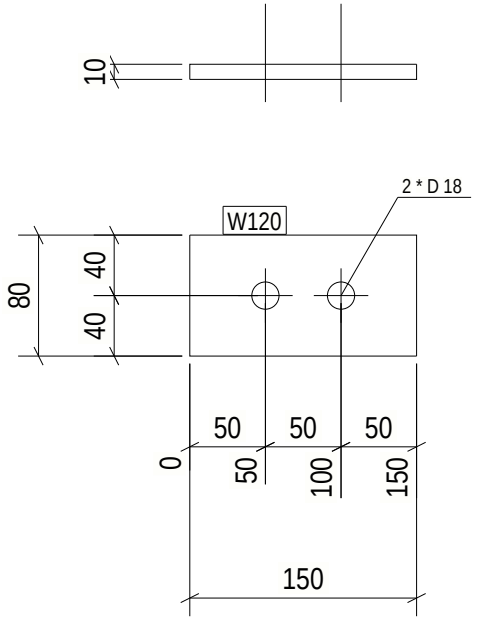

4 REQ'D AS DRAWN MK'D W120

6 October Monorail
Engineering Unit
Valid For Construction

GENERAL NOTES:

1. THE DIMENSIONS SHOWN ARE NOMINAL (IN MILLIMETERS), U.N.O.
2. WELD SIZESHALL BE AISC MINIMUM OF 6 mm UNLESS NOTED OTHERWISE.
3. ALL FIELD WELDS SHALL BE INSPECTED PER QUALITY ASSURANCE AND SPECIAL INSPECTIONS.

REFERENCE DRAWINGS

1	93M-BOA-NAT-LOT-04833
2	93M-BOA-NAT-LOT-09170
3	93M-BOA-NAT-LOT-01976
4	93M-BOA-NAT-LOT-20021
5	
6	
7	
8	
9	

6TH OF OCTOBER CITY RAIL TRANSIT MONORAIL

The Authority | Hill International Consultant | Main Contractor | Structural Designer

KEY PLAN:

SCALE	SHOP DRAWING	DATE
AS SHOWN		08/29/2023

DRAWING TITLE
6TH OF OCTOBER MONORAIL
SERVICE WALKWAYS
ZONE(1016)
W120

REV	DATE	DSG	CHK	APP	AMENDMENTS	STATUS
B	08/29/2023	MAH	MAH	DRAW	ISSUED FOR INFORMATION	IFI
A	08/21/2022	MAH	MAH	DRAW	ISSUED FOR INFORMATION	IFI

Project Code	Rubric	Initiator	Lot	Ref	Number	Revision
9 3 M	0 4 7 6	A C C	6 0 D E P	D W G	1 6 3 8 5	B

Tekla structures

Approval is subject to approval of coordination package between multi-discipline.

REVIEWED WITH COMMENT
MONORAILS PROJECT

Length & Area & Weight per piece						
W119	CHS48.3*4.0	S235JR	2	22.0	0.00	0.1
Mark	Profile	Grade	QTY	Length	Area	Weight

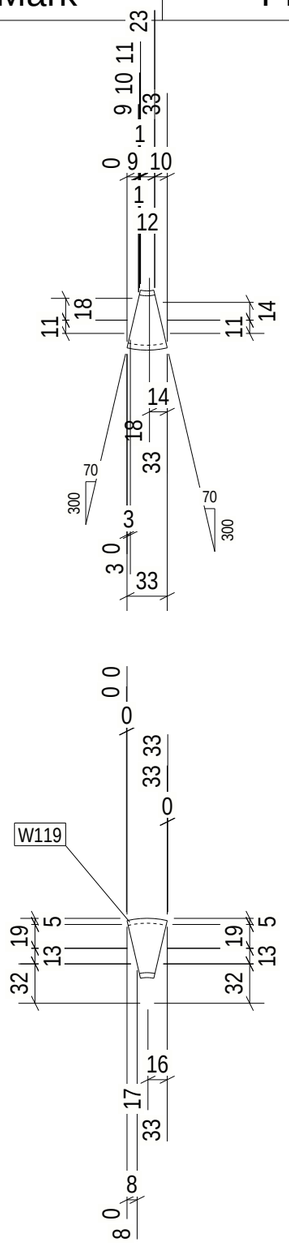

2 REQ'D AS DRAWN MK'D W119

6 October Monorail
Engineering Unit
Valid For Construction

GENERAL NOTES:

1. THE DIMENSIONS SHOWN ARE NOMINAL (IN MILLIMETERS), U.N.O.
2. WELD SIZESHALL BE AISC MINIMUM OF 6 mm UNLESS NOTED OTHERWISE.
3. ALL FIELD WELDS SHALL BE INSPECTED PER QUALITY ASSURANCE AND SPECIAL INSPECTIONS.

REFERENCE DRAWINGS

1	93M-BOA-NAT-LOT-04833
2	93M-BOA-NAT-LOT-09170
3	93M-BOA-NAT-LOT-01976
4	93M-BOA-NAT-LOT-20021
5	
6	
7	
8	
9	

6TH OF OCTOBER CITY RAIL TRANSIT MONORAIL

The Authority | Hill International Consultant | Main Contractor | Structural Designer

KEY PLAN:

SCALE: AS SHOWN | SHOPDRAWING | DATE: 09/29/2023

REV	DATE	DSG.	CHK.	APP.	AMENDMENTS	STATUS
B	08/29/2023	M.KH	M.KH	DR.M.M	ISSUED FOR INFORMATION	IFI
A	09/21/2022	M.KH	M.KH	DR.M.M	ISSUED FOR INFORMATION	IFI

DRAWING TITLE

6TH OF OCTOBER MONORAIL
SERVICE WALKWAYS
ZONE(1016)
W119

Project Code	Rubric	Initiator	Lot	Ref	Number	Revision
93	M047	6ACC	60DEP	DWG	1638	B

Tekla structures

Approval is subject to approval of coordination package between multi-discipline.

REVIEWED WITH COMMENT
MONORAILS PROJECT

Length & Area & Weight per piece						
W118	UPN220	S235JR	2	600.0	0.43	17.6
Mark	Profile	Grade	QTY	Length	Area	Weight

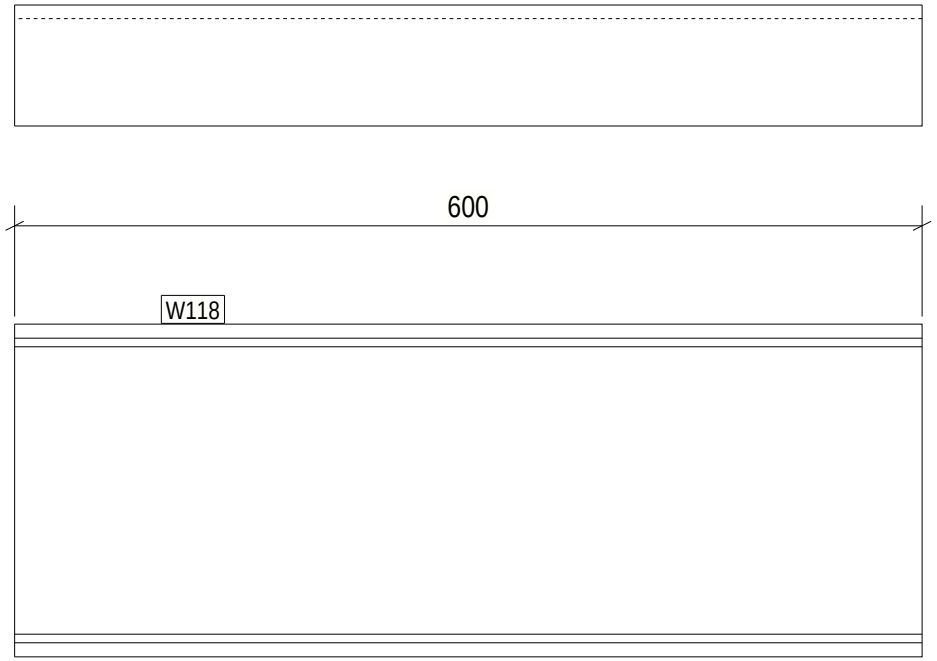

2 REQ'D AS DRAWN MK'D W118

6 October Monorail
Engineering Unit
Valid For Construction

GENERAL NOTES:

1. THE DIMENSIONS SHOWN ARE NOMINAL (IN MILLIMETERS), U.N.O.
2. WELD SIZESHALL BE AISC MINIMUM OF 6 mm UNLESS NOTED OTHERWISE.
3. ALL FIELD WELDS SHALL BE INSPECTED PER QUALITY ASSURANCE AND SPECIAL INSPECTIONS.

REFERENCE DRAWINGS

1	93M-BOA-NAT-LOT-04833
2	93M-BOA-NAT-LOT-09170
3	93M-BOA-NAT-LOT-01976
4	93M-BOA-NAT-LOT-20021
5	
6	
7	
8	
9	

6TH OF OCTOBER CITY RAIL TRANSIT MONORAIL

The Authority | Hill International Consultant | Main Contractor | Structural Designer

KEY PLAN:

SCALE	SHOP DRAWING	DATE
AS SHOWN		08/29/2023

DRAWING TITLE
6TH OF OCTOBER MONORAIL
SERVICE WALKWAYS
ZONE(1016)
W118

REV	DATE	DSG	CHK	APP	AMENDMENTS	STATUS
B	08/29/2023	MAH	MAH	DRAW	ISSUED FOR INFORMATION	IFI
A	08/11/2022	MAH	MAH	DRAW	ISSUED FOR INFORMATION	IFI

Project Code	Rubric	Initiator	Lot	Ref	Number	Revision
9 3	M 0 4 7 6	A C C	6 0 D E P	D W G	1 6 3 8 7	B

Tekla structures

Approval is subject to approval of coordination package between multi-discipline.

REVIEWED WITH COMMENT
MONORAILS PROJECT

Length & Area & Weight per piece						
W117	UPN220	S235JR	2	4040.1	2.91	118.6
Mark	Profile	Grade	QTY	Length	Area	Weight

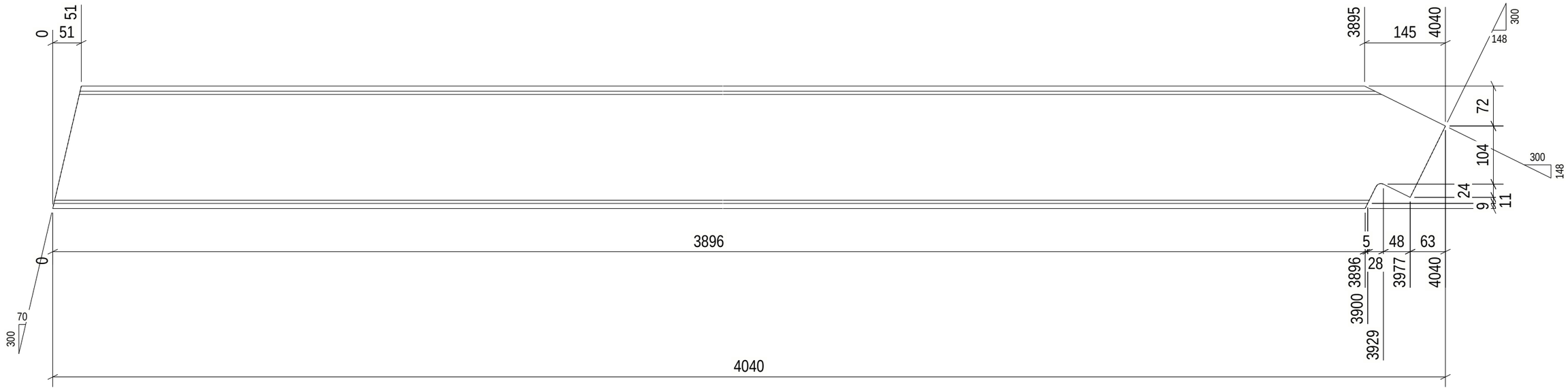

2 REQ'D AS DRAWN MK'D W117

6 October Monorail
Engineering Unit
Valid For Construction

GENERAL NOTES:

1. THE DIMENSIONS SHOWN ARE NOMINAL (IN MILLIMETERS), U.N.O.
2. WELD SIZESHALL BE AISC MINIMUM OF 6 mm UNLESS NOTED OTHERWISE.
3. ALL FIELD WELDS SHALL BE INSPECTED PER QUALITY ASSURANCE AND SPECIAL INSPECTIONS.

REFERENCE DRAWINGS

1	93M-BOA-NAT-LOT-04833
2	93M-BOA-NAT-LOT-09170
3	93M-BOA-NAT-LOT-01976
4	93M-BOA-NAT-LOT-20021
5	
6	
7	
8	
9	

6TH OF OCTOBER CITY RAIL TRANSIT MONORAIL

The Authority | Consultant: Hill International | Main Contractor: ORASCOM CONSTRUCTION, BOMBARDIER | Structural Designer: INNOVA TRANSPORTATION

KEY PLAN:

SCALE: AS SHOWN | SHOPDRAWING | DATE: 09/29/2023

REV	DATE	DSG.	CHK.	APP.	AMENDMENTS	STATUS
B	08/29/2023	M.KH	M.KH	DR.M.M	ISSUED FOR INFORMATION	IFI
A	09/21/2022	M.KH	M.KH	DR.M.M	ISSUED FOR INFORMATION	IFI

DRAWING TITLE

6TH OF OCTOBER MONORAIL
SERVICE WALKWAYS
ZONE(1016)
W117

Project Code	Rubric	Initiator	Lot	Ref	Number	Revision
93M	0476	ACC	60DEP	DWG	16388	B

Tekla structures

Approval is subject to approval of coordination package between multi-discipline.

REVIEWED WITH COMMENT
MONORAILS PROJECT

Length & Area & Weight per piece						
W115	UPN220	S235JR	2	751.4	0.54	22.1
Mark	Profile	Grade	QTY	Length	Area	Weight

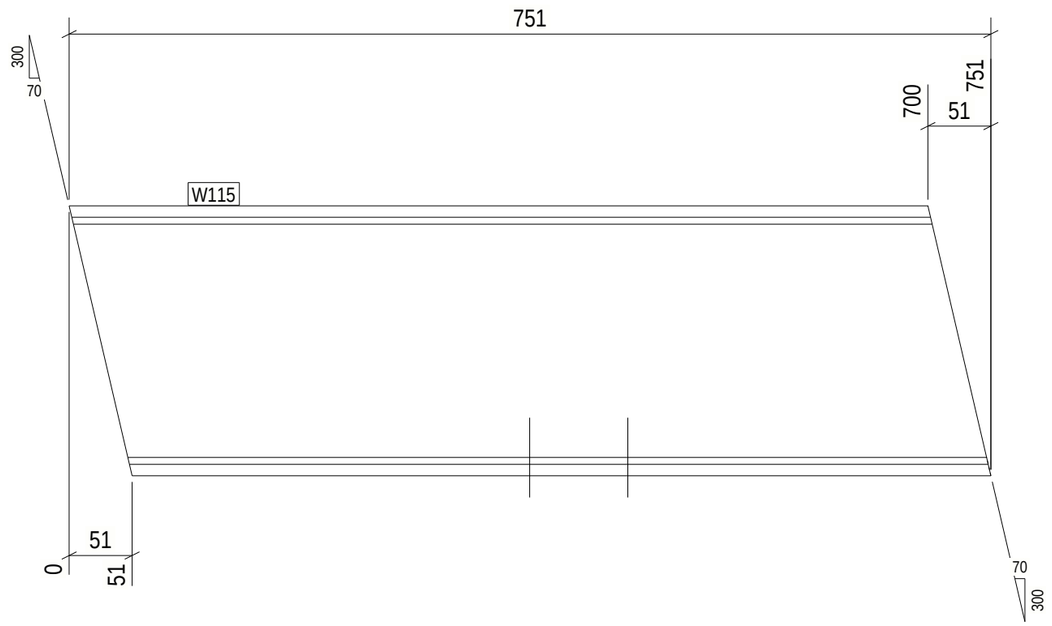

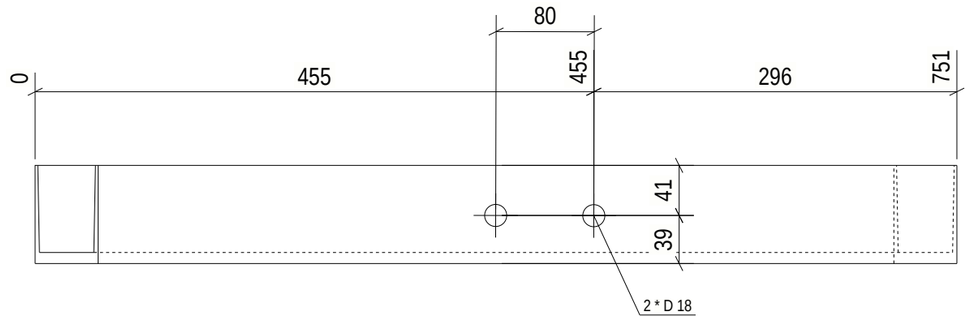

2 REQ'D AS DRAWN MK'D W115

6TH OF OCTOBER CITY RAIL TRANSIT MONORAIL

The Authority | Consultant: Hill International | Main Contractor | Structural Designer

6 October Monorail
Engineering Unit
Valid For Construction

GENERAL NOTES:

1. THE DIMENSIONS SHOWN ARE NOMINAL (IN MILLIMETERS), U.N.O.
2. WELD SIZESHALL BE AISC MINIMUM OF 6 mm UNLESS NOTED OTHERWISE.
3. ALL FIELD WELDS SHALL BE INSPECTED PER QUALITY ASSURANCE AND SPECIAL INSPECTIONS.

REFERENCE DRAWINGS

1	93M-BOA-NAT-LOT-04833
2	93M-BOA-NAT-LOT-09170
3	93M-BOA-NAT-LOT-01976
4	93M-BOA-NAT-LOT-20021
5	
6	
7	
8	
9	

KEY PLAN:

SCALE	SHOPDRAWING	DATE
AS SHOWN		09/29/2023

REV	DATE	DSG.	CHK.	APP.	AMENDMENTS	STATUS
B	09/29/2023	M.KH	M.KH	DR.M.M	ISSUED FOR INFORMATION.	IFI
A	09/21/2022	M.KH	M.KH	DR.M.M	ISSUED FOR INFORMATION.	IFI

DRAWING TITLE

6TH OF OCTOBER MONORAIL
SERVICE WALKWAYS
ZONE(1016)
W115

Project Code	Rubric	Initiator	Lot	Ref	Number	Revision
9 3 M	0 4 7 6	A C C	6 0 D E	P	D W G	1 6 3 8 9	B

Tekla structures

Approval is subject to approval of coordination package between multi-discipline.

REVIEWED WITH COMMENT
MONORAILS PROJECT

Length & Area & Weight per piece						
W114	UPN220	S235JR	2	1973.9	1.42	58.0
Mark	Profile	Grade	QTY	Length	Area	Weight

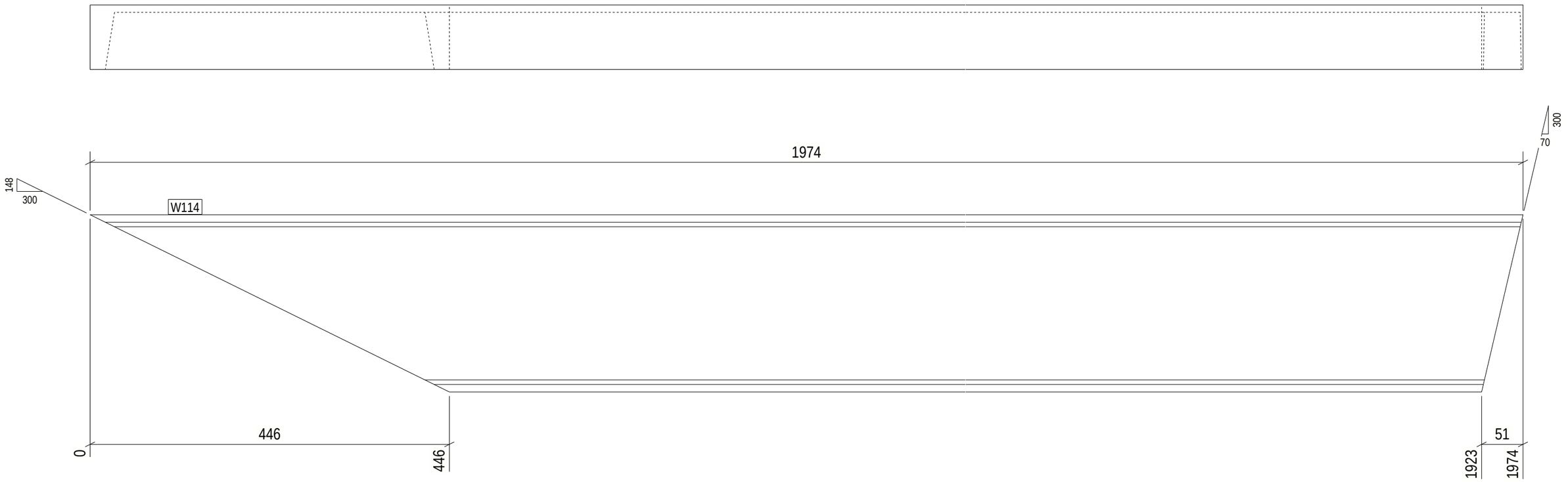

2 REQ'D AS DRAWN MK'D W114

6 October: Monorail
Engineering Unit
Valid For Construction

GENERAL NOTES:

1. THE DIMENSIONS SHOWN ARE NOMINAL (IN MILLIMETERS), U.N.O.
2. WELD SIZESHALL BE AISC MINIMUM OF 6 mm UNLESS NOTED OTHERWISE.
3. ALL FIELD WELDS SHALL BE INSPECTED PER QUALITY ASSURANCE AND SPECIAL INSPECTIONS.

REFERENCE DRAWINGS

1	93M-BOA-NAT-LOT-04833
2	93M-BOA-NAT-LOT-09170
3	93M-BOA-NAT-LOT-01976
4	93M-BOA-NAT-LOT-20021
5	
6	
7	
8	
9	

6TH OF OCTOBER CITY RAIL TRANSIT MONORAIL

The Authority | Hill International Consultant | ORASCOM BOMBARDIER Main Contractor | INNOVA Structural Designer

KEY PLAN:

SCALE	SHOPDRAWING	DATE
AS SHOWN		09/29/2023

REV	DATE	DSG.	CHK.	APP.	AMENDMENTS	STATUS
B	08/29/2023	M.KH	M.KH	DR.M.M	ISSUED FOR INFORMATION	IFI
A	09/21/2022	M.KH	M.KH	DR.M.M	ISSUED FOR INFORMATION	IFI

DRAWING TITLE

6TH OF OCTOBER MONORAIL
SERVICE WALKWAYS
ZONE(1016)
W114

Project Code	Rubric	Initiator	Lot	Ref	Number	Revision
93M	0476	ACC	60DEP	DWG	16390	B

Tekla structures

Approval is subject to approval of coordination package between multi-discipline.

REVIEWED WITH COMMENT MONORAILS PROJECT

Length & Area & Weight per piece						
W105	PL12*80	S355JR	3	180.0	0.04	1.4
Mark	Profile	Grade	QTY	Length	Area	Weight

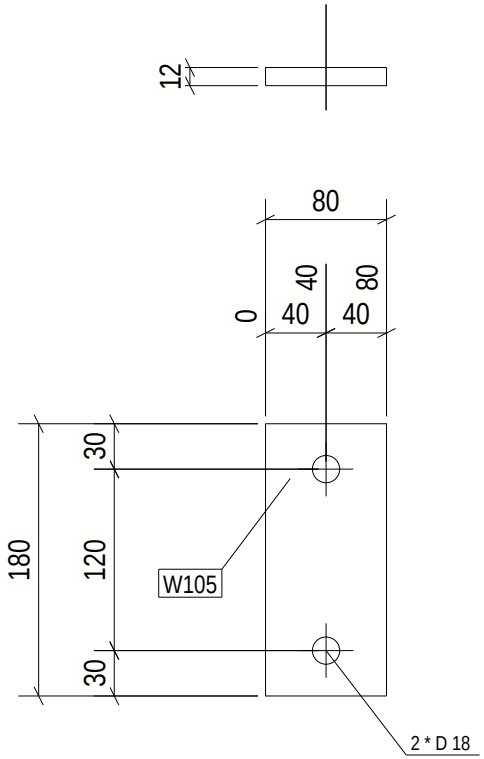

3 REQ'D AS DRAWN MK'D W105

6 October Monorail Engineering Unit
Valid For Construction

GENERAL NOTES:

1. THE DIMENSIONS SHOWN ARE NOMINAL (IN MILLIMETERS), U.N.O.
2. WELD SIZESHALL BE AISC MINIMUM OF 6 mm UNLESS NOTED OTHERWISE.
3. ALL FIELD WELDS SHALL BE INSPECTED PER QUALITY ASSURANCE AND SPECIAL INSPECTIONS.

REFERENCE DRAWINGS

1	93M-BOA-NAT-LOT-04833
2	93M-BOA-NAT-LOT-09170
3	93M-BOA-NAT-LOT-01976
4	93M-BOA-NAT-LOT-20021
5	
6	
7	
8	
9	

6TH OF OCTOBER CITY RAIL TRANSIT MONORAIL

The Authority | Hill International Consultant | Main Contractor | Structural Designer

KEY PLAN:

SCALE	SHOP DRAWING	DATE
AS SHOWN		08/29/2023

REV	DATE	DSG.	CHK.	APP.	AMENDMENTS	STATUS
B	08/29/2023	MKH	MKH	DR.MW	ISSUED FOR INFORMATION	IFI
A	08/21/2022	MKH	MKH	DR.MW	ISSUED FOR INFORMATION	IFI

DRAWING TITLE

6TH OF OCTOBER MONORAIL SERVICE WALKWAYS ZONE(1016)
W105

Project Code	Rubric	Initiator	Lot	Ref	Number	Revision
93M	0476	ACC	60DEP	DWG	16391	B

Tekla structures

Approval is subject to approval of coordination package between multi-discipline.

REVIEWED WITH COMMENT
MONORAILS PROJECT

Length & Area & Weight per piece						
W104	PL12*80	S355JR	5	180.0	0.04	1.4
Mark	Profile	Grade	QTY	Length	Area	Weight

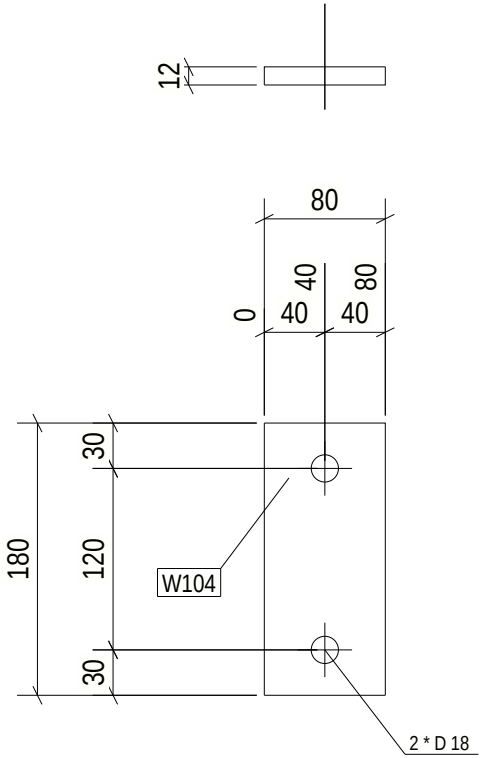

5 REQ'D AS DRAWN MK'D W104

6 October Monorail
Engineering Unit
Valid For Construction

GENERAL NOTES:

1. THE DIMENSIONS SHOWN ARE NOMINAL (IN MILLIMETERS), U.N.O.
2. WELD SIZESHALL BE AISC MINIMUM OF 6 mm UNLESS NOTED OTHERWISE.
3. ALL FIELD WELDS SHALL BE INSPECTED PER QUALITY ASSURANCE AND SPECIAL INSPECTIONS.

REFERENCE DRAWINGS

1	93M-BOA-NAT-LOT-04833
2	93M-BOA-NAT-LOT-09170
3	93M-BOA-NAT-LOT-01976
4	93M-BOA-NAT-LOT-20021
5	
6	
7	
8	
9	

6TH OF OCTOBER CITY RAIL TRANSIT MONORAIL

The Authority | Hill International Consultant | Main Contractor | Structural Designer

KEY PLAN:

SCALE: AS SHOWN | SHOP DRAWING | DATE: 08/29/2023

DRAWING TITLE: 6TH OF OCTOBER MONORAIL SERVICE WALKWAYS ZONE(1016) W104

REV	DATE	DSG	CHK	APP	AMENDMENTS	STATUS
B	08/29/2023	MAH	MAH	DRAW	ISSUED FOR INFORMATION	IFI
A	08/11/2022	MAH	MAH	DRAW	ISSUED FOR INFORMATION	IFI

Project Code	Rubric	Initiator	Lot	Ref	Number	Revision
93	M04	76	ACC60	DEP	DWG	1632	B

Tekla structures

Approval is subject to approval of coordination package between multi-discipline.

REVIEWED WITH COMMENT
MONORAILS PROJECT

Length & Area & Weight per piece						
W103	UPN220	S235JR	1	1973.9	1.42	58.0
Mark	Profile	Grade	QTY	Length	Area	Weight

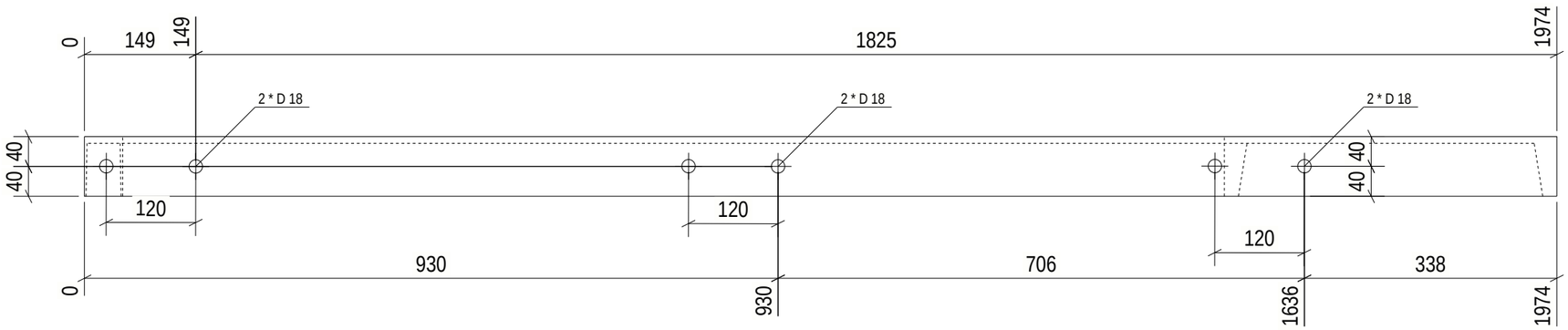

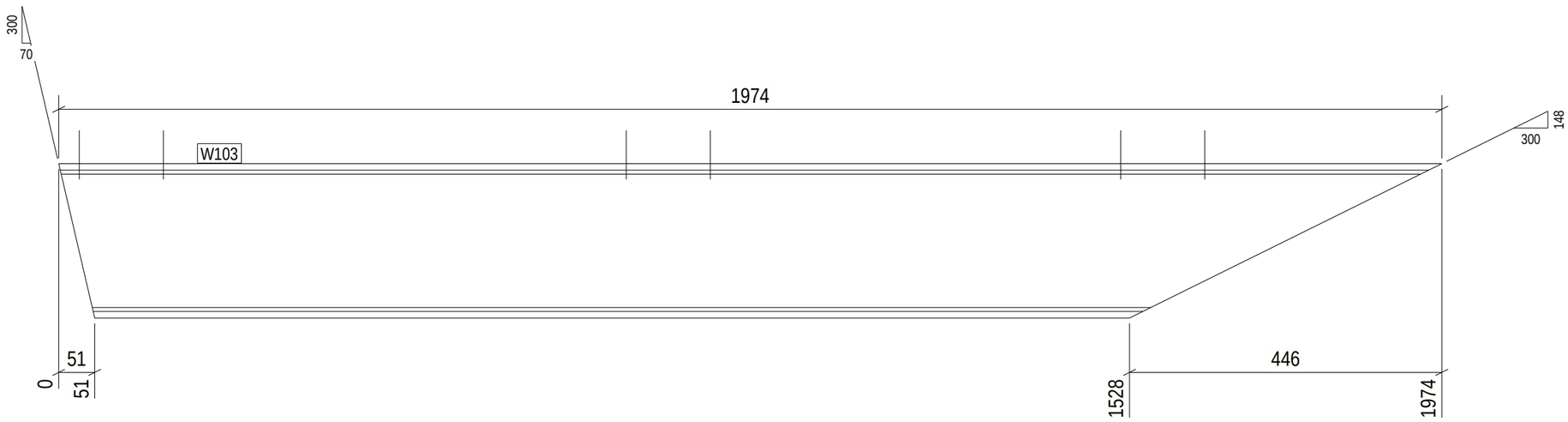

1 REQ'D AS DRAWN MK'D W103

6 October Monorail
Engineering Unit
Valid For Construction

GENERAL NOTES:

1. THE DIMENSIONS SHOWN ARE NOMINAL (IN MILLIMETERS), U.N.O.
2. WELD SIZESHALL BE AISC MINIMUM OF 6 mm UNLESS NOTED OTHERWISE.
3. ALL FIELD WELDS SHALL BE INSPECTED PER QUALITY ASSURANCE AND SPECIAL INSPECTIONS.

REFERENCE DRAWINGS

1	93M-BOA-NAT-LOT-04833
2	93M-BOA-NAT-LOT-09170
3	93M-BOA-NAT-LOT-01976
4	93M-BOA-NAT-LOT-20021
5	
6	
7	
8	
9	

6TH OF OCTOBER CITY RAIL TRANSIT MONORAIL

The Authority — Hill International (Consultant) — Main Contractor — Structural Designer

KEY PLAN:

SCALE	SHOPDRAWING	DATE
AS SHOWN		09/29/2023

REV	DATE	DSG.	CHK.	APP.	AMENDMENTS	STATUS
B	08/29/2023	M.KH	M.KH	DR.M.M	ISSUED FOR INFORMATION	IFI
A	09/21/2022	M.KH	M.KH	DR.M.M	ISSUED FOR INFORMATION	IFI

DRAWING TITLE

6TH OF OCTOBER MONORAIL
SERVICE WALKWAYS
ZONE(1016)
W103

Project Code	Rubric	Initiator	Lot	Ref	Number	Revision
93	M047	ACC60DE	P	DWG	16393	B

Tekla structures

Approval is subject to approval of coordination package between multi-discipline.

REVIEWED WITH COMMENT
MONORAILS PROJECT

Length & Area & Weight per piece						
W007	PL25*300	S355JR	2	300.0	0.21	17.7
Mark	Profile	Grade	QTY	Length	Area	Weight

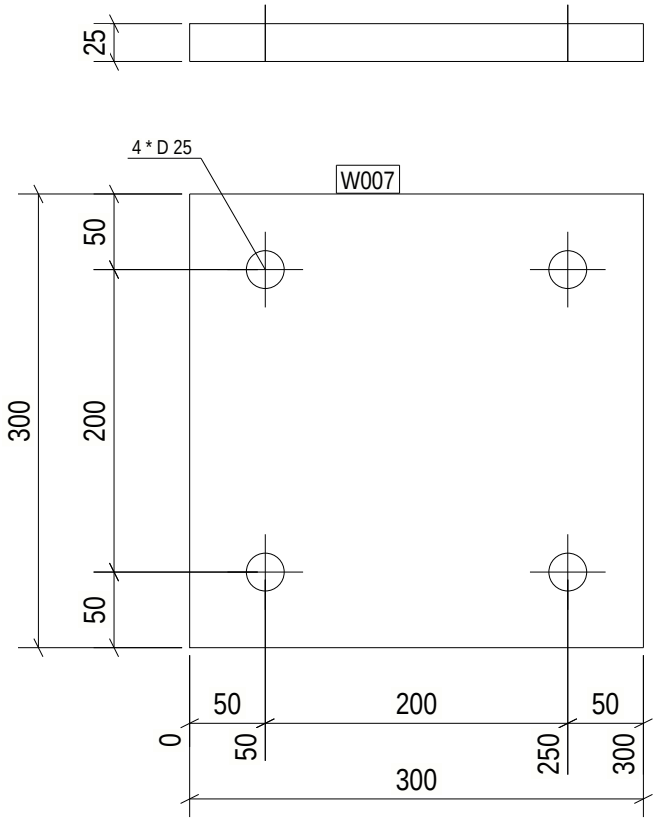

2 REQ'D AS DRAWN MK'D W007

6 October Monorail
Engineering Unit
Valid For Construction

GENERAL NOTES:

1. THE DIMENSIONS SHOWN ARE NOMINAL (IN MILLIMETERS), U.N.O.
2. WELD SIZESHALL BE AISC MINIMUM OF 6 mm UNLESS NOTED OTHERWISE.
3. ALL FIELD WELDS SHALL BE INSPECTED PER QUALITY ASSURANCE AND SPECIAL INSPECTIONS.

REFERENCE DRAWINGS

1	93M-BOA-NAT-LOT-04833
2	93M-BOA-NAT-LOT-09170
3	93M-BOA-NAT-LOT-01976
4	93M-BOA-NAT-LOT-20021
5	
6	
7	
8	
9	

6TH OF OCTOBER CITY RAIL TRANSIT MONORAIL

The Authority | Hill International Consultant | Main Contractor | Structural Designer

KEY PLAN:

SCALE: AS SHOWN | SHOP DRAWING | DATE: 08/29/2023

DRAWING TITLE: 6TH OF OCTOBER MONORAIL SERVICE WALKWAYS ZONE(1016) W007

REV	DATE	DSG	CHK	APP	AMENDMENTS	STATUS
B	08/29/2023	MAH	MAH	DRAW	ISSUED FOR INFORMATION	IFI
A	08/11/2022	MAH	MAH	DRAW	ISSUED FOR INFORMATION	IFI

Project Code	Rubric	Initiator	Lot	Ref	Number	Revision
93M	0476	ACC60	DEP	DWG	16394	B

Tekla structures

Approval is subject to approval of coordination package between multi-discipline.

REVIEWED WITH COMMENT
MONORAILS PROJECT

Length & Area & Weight per piece						
W005	PL25*300	S355JR	3	300.0	0.21	17.7
Mark	Profile	Grade	QTY	Length	Area	Weight

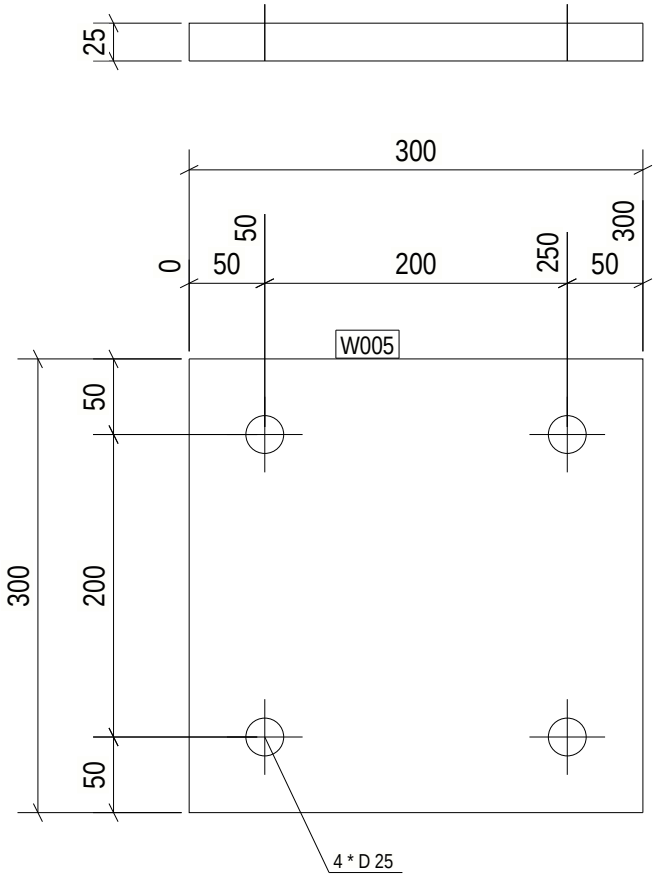

3 REQ'D AS DRAWN MK'D W005

6 October Monorail
Engineering Unit
Valid For Construction

GENERAL NOTES:

1. THE DIMENSIONS SHOWN ARE NOMINAL (IN MILLIMETERS), U.N.O.
2. WELD SIZESHALL BE AISC MINIMUM OF 6 mm UNLESS NOTED OTHERWISE.
3. ALL FIELD WELDS SHALL BE INSPECTED PER QUALITY ASSURANCE AND SPECIAL INSPECTIONS.

REFERENCE DRAWINGS

1	93M-BOA-NAT-LOT-04833
2	93M-BOA-NAT-LOT-09170
3	93M-BOA-NAT-LOT-01976
4	93M-BOA-NAT-LOT-20021
5	
6	
7	
8	
9	

6TH OF OCTOBER CITY RAIL TRANSIT MONORAIL

The Authority | Hill International Consultant | Main Contractor | Structural Designer

KEY PLAN:

SCALE: AS SHOWN | SHOP DRAWING | DATE: 08/29/2023

DRAWING TITLE: 6TH OF OCTOBER MONORAIL SERVICE WALKWAYS ZONE(1016) W005

REV	DATE	DSG	CHK	APP	AMENDMENTS	STATUS
B	08/29/2023	MAH	MAH	DRAW	ISSUED FOR INFORMATION	IFI
A	08/11/2022	MAH	MAH	DRAW	ISSUED FOR INFORMATION	IFI

Project Code	Rubric	Initiator	Lot	Ref	Number	Revision
9 3 M	0 4 7 6	A C C	6 0 D E P	D W G	1 6 3 9 5	B

Tekla structures

Approval is subject to approval of coordination package between multi-discipline.

REVIEWED WITH COMMENT
MONORAILS PROJECT

Length & Area & Weight per piece						
W004	PL25*300	S355JR	3	300.0	0.21	17.7
Mark	Profile	Grade	QTY	Length	Area	Weight

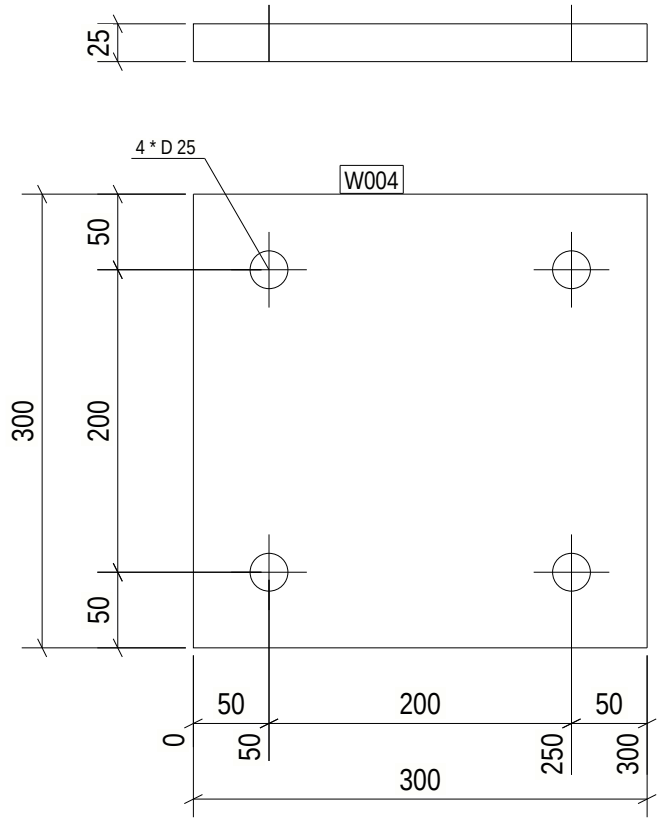

3 REQ'D AS DRAWN MK'D W004

6 October Monorail
Engineering Unit
Valid For Construction

GENERAL NOTES:

1. THE DIMENSIONS SHOWN ARE NOMINAL (IN MILLIMETERS), U.N.O.
2. WELD SIZESHALL BE AISC MINIMUM OF 6 mm UNLESS NOTED OTHERWISE.
3. ALL FIELD WELDS SHALL BE INSPECTED PER QUALITY ASSURANCE AND SPECIAL INSPECTIONS.

REFERENCE DRAWINGS

1	93M-BOA-NAT-LOT-04833
2	93M-BOA-NAT-LOT-09170
3	93M-BOA-NAT-LOT-01976
4	93M-BOA-NAT-LOT-20021
5	
6	
7	
8	
9	

6TH OF OCTOBER CITY RAIL TRANSIT MONORAIL

The Authority | Hill International Consultant | Main Contractor | Structural Designer

KEY PLAN:

SCALE: AS SHOWN | SHOP DRAWING | DATE: 08/29/2023

DRAWING TITLE: 6TH OF OCTOBER MONORAIL SERVICE WALKWAYS ZONE(1016) W004

REV	DATE	DSG	CHK	APP	AMENDMENTS	STATUS
B	08/29/2023	MAH	MAH	DRAW	ISSUED FOR INFORMATION	IFI
A	08/11/2022	MAH	MAH	DRAW	ISSUED FOR INFORMATION	IFI

Project Code	Rubric	Initiator	Lot	Ref	Number	Revision
9 3 M	0 4 7 6	A C C	6 0 D E P	D W G	1 6 3 9 6	B

Tekla structures

Approval is subject to approval of coordination package between multi-discipline.

REVIEWED WITH COMMENT
MONORAILS PROJECT

Length & Area & Weight per piece						
W003	PL25*300	S355JR	4	300.0	0.21	17.7
Mark	Profile	Grade	QTY	Length	Area	Weight

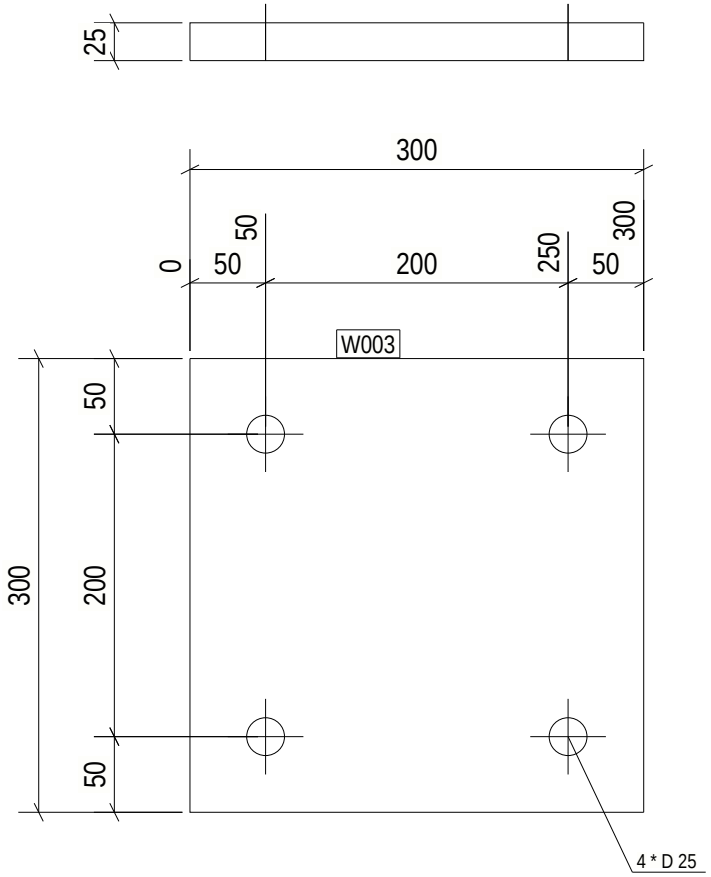

4 REQ'D AS DRAWN MK'D W003

6 October Monorail
Engineering Unit
Valid For Construction

GENERAL NOTES:

1. THE DIMENSIONS SHOWN ARE NOMINAL (IN MILLIMETERS), U.N.O.
2. WELD SIZESHALL BE AISC MINIMUM OF 6 mm UNLESS NOTED OTHERWISE.
3. ALL FIELD WELDS SHALL BE INSPECTED PER QUALITY ASSURANCE AND SPECIAL INSPECTIONS.

REFERENCE DRAWINGS

1	93M-BOA-NAT-LOT-04833
2	93M-BOA-NAT-LOT-09170
3	93M-BOA-NAT-LOT-01976
4	93M-BOA-NAT-LOT-20021
5	
6	
7	
8	
9	

6TH OF OCTOBER CITY RAIL TRANSIT MONORAIL

The Authority | Hill International Consultant | Main Contractor | Structural Designer

KEY PLAN:

SCALE	SHOP DRAWING	DATE
AS SHOWN		08/29/2023

DRAWING TITLE
6TH OF OCTOBER MONORAIL
SERVICE WALKWAYS
ZONE(1016)
W003

REV	DATE	DSG	CHK	APP	AMENDMENTS	STATUS
B	08/29/2023	MAH	MAH	DRAW	ISSUED FOR INFORMATION	IFI
A	08/11/2022	MAH	MAH	DRAW	ISSUED FOR INFORMATION	IFI

Project Code	Rubric	Initiator	Lot	Ref	Number	Revision
93M	0476	ACC60	DEP	DWG	16397	B

Tekla structures

Approval is subject to approval of coordination package between multi-discipline.

REVIEWED WITH COMMENT
MONORAILS PROJECT

Length & Area & Weight per piece

Mark	Profile	Grade	QTY	Length	Area	Weight
W001	PL25*300	S355JR	104	300.0	0.21	17.7

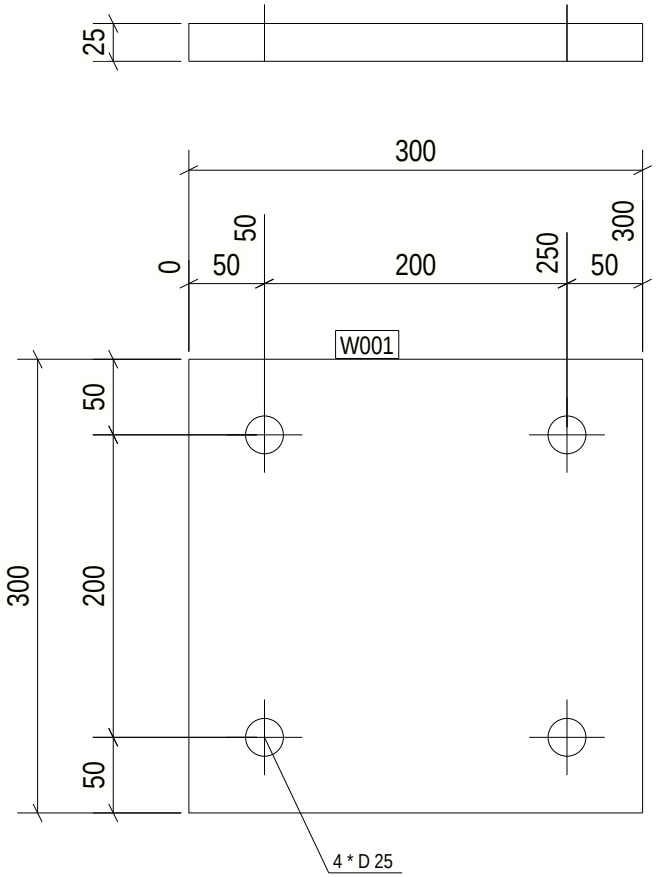

104 REQ'D AS DRAWN MK'D W001

6 October Monorail
Engineering Unit
Valid For Construction

Tekla structures

GENERAL NOTES:

1. THE DIMENSIONS SHOWN ARE NOMINAL (IN MILLIMETERS), U.N.O.
2. WELD SIZESHALL BE AISC MINIMUM OF 6 mm UNLESS NOTED OTHERWISE.
3. ALL FIELD WELDS SHALL BE INSPECTED PER QUALITY ASSURANCE AND SPECIAL INSPECTIONS.

REFERENCE DRAWINGS

1	93M-BOA-NAT-LOT-04833
2	93M-BOA-NAT-LOT-09170
3	93M-BOA-NAT-LOT-01976
4	93M-BOA-NAT-LOT-20021
5	
6	
7	
8	
9	

6TH OF OCTOBER CITY RAIL TRANSIT MONORAIL

The Authority | Hill International Consultant | Main Contractor | Structural Designer

KEY PLAN:

SCALE: AS SHOWN | SHOP DRAWING | DATE: 08/29/2023

DRAWING TITLE: 6TH OF OCTOBER MONORAIL SERVICE WALKWAYS ZONE(1016) W001

REV	DATE	DSG	CHK	APP	AMENDMENTS	STATUS
B	08/29/2023	MAH	MAH	DRAW	ISSUED FOR INFORMATION	IFI
A	08/11/2022	MAH	MAH	DRAW	ISSUED FOR INFORMATION	IFI

Project Code	Rubric	Initiator	Lot	Ref	Number	Revision
93M	047	ACC	60DEP	DWG	1639	B

Approval is subject to approval of coordination package between multi-discipline.

REVIEWED WITH COMMENT
MONORAILS PROJECT

Length & Area & Weight per piece						
W106	L60*6	S235JR	2	674.7	0.16	3.6
Mark	Profile	Grade	QTY	Length	Area	Weight

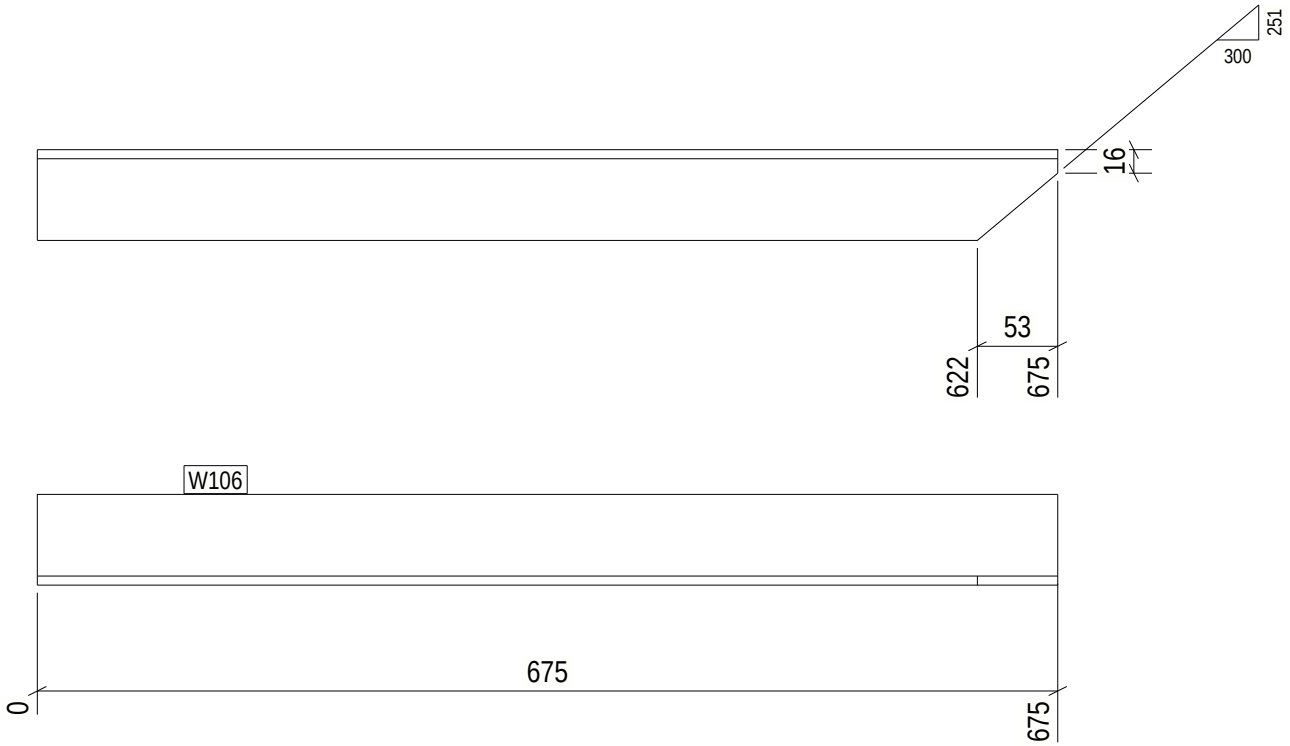

2 REQ'D AS DRAWN MK'D W106

6 October Monorail
Engineering Unit
Valid For Construction

GENERAL NOTES:

1. THE DIMENSIONS SHOWN ARE NOMINAL (IN MILLIMETERS), U.N.O.
2. WELD SIZESHALL BE AISC MINIMUM OF 6 mm UNLESS NOTED OTHERWISE.
3. ALL FIELD WELDS SHALL BE INSPECTED PER QUALITY ASSURANCE AND SPECIAL INSPECTIONS.

REFERENCE DRAWINGS

1	93M-BOA-NAT-LOT-04833
2	93M-BOA-NAT-LOT-09170
3	93M-BOA-NAT-LOT-01976
4	93M-BOA-NAT-LOT-20021
5	
6	
7	
8	
9	

6TH OF OCTOBER CITY RAIL TRANSIT MONORAIL

The Authority — Hill International Consultant — Main Contractor — Structural Designer

KEY PLAN:

SCALE: AS SHOWN | SHOP DRAWING | DATE: 08/29/2023

DRAWING TITLE: 6TH OF OCTOBER MONORAIL SERVICE WALKWAYS ZONE(1016) W106

REV	DATE	DSG	CHK	APP	AMENDMENTS	STATUS
A	08/29/2023	MAH	BEH	DRAW	ISSUED FOR APPROVAL	IFA

Project Code	Rubric	Initiator	Lot	Ref	Number	Revision
93M	0476	ACC	60DEP	DWG	1639	A

Tekla structures

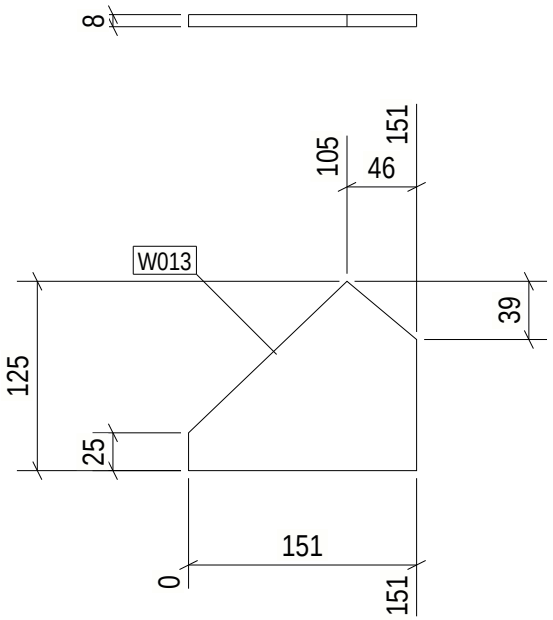

Length & Area & Weight per piece						
W013	PL8*125.2	S355JR	2	150.8	0.03	0.8
Mark	Profile	Grade	QTY	Length	Area	Weight

Approval is subject to approval of coordination package between multi-discipline.

REVIEWED WITH COMMENT
MONORAILS PROJECT

2 REQ'D AS DRAWN MK'D W013

6 October Monorail
Engineering Unit
Valid For Construction

Tekla structures

GENERAL NOTES:

1. THE DIMENSIONS SHOWN ARE NOMINAL (IN MILLIMETERS), U.N.O.
2. WELD SIZESHALL BE AISC MINIMUM OF 6 mm UNLESS NOTED OTHERWISE.
3. ALL FIELD WELDS SHALL BE INSPECTED PER QUALITY ASSURANCE AND SPECIAL INSPECTIONS.

REFERENCE DRAWINGS

1	93M-BOA-NAT-LOT-04833
2	93M-BOA-NAT-LOT-09170
3	93M-BOA-NAT-LOT-01976
4	93M-BOA-NAT-LOT-20021
5	
6	
7	
8	
9	

6TH OF OCTOBER CITY RAIL TRANSIT MONORAIL

The Authority — Hill International Consultant — Main Contractor — Structural Designer

KEY PLAN:

SCALE	SHOP DRAWING	DATE
AS SHOWN		08/29/2023

DRAWING TITLE

6TH OF OCTOBER MONORAIL
SERVICE WALKWAYS
ZONE(1016)
W013

REV	DATE	DSG	CHK	APP	AMENDMENTS	STATUS
A	08/29/2023	MSH	MSH	DRAW	ISSUED FOR APPROVAL	IFA

Project Code	Rubric	Initiator	Lot	Ref	Number	Revision
9 3 M	0 4 7 6	A C C	6 0 D E P	D W G	1 6 4 0 0	A